CALL TOLL FREE 877-742-2878 FOR SALES AND SUPPORT
Return to BurtProcess.com

# HTW 300

## 3" x 2-1/2" End Suction Centrifugal Hot Water Pump

The HTW 300 is a patented, unique centrifugal pump specifically designed for high temperature process manufacturing applications using hot water, ethylene glycol, propylene glycol and triethylene glycol. The Tempuflo HTW Series utilizes an isolated seal chamber, which is effectively cooled by both a cooling loop (heat exchanger) and by a fan clamp which couples the unit to the shaft of a standard NEMA C Face frame motor.

The isolator technology combined with the heat exchanger allows the seal cavity to reach a maximum and seal chamber temperature of 170°F (77°C) while the process temperature is at 400°F (204°C). This lower seal temperature greatly increases seal life, which means less down time for the end user.

Discharge port location can be provided as either Horizontal or Vertical position.



### Application

- Industrial
- OEM

## SPECIFICATIONS:

| | |
|---|---|
| Suction And Discharge | 3" x 2-1/2" ANSI 150# flat flange |
| Materials Of Construction | Ductile iron |
| Flow | Up to 500 GPM |
| Head Feet | Up to 190' |
| Impeller | 7.0" cast iron, enclosed |
| Motor | Up to 20 HP |
| Drive Options | Close coupled 184TC, Close coupled 215TC, Pedestal, PumPAK® (without motor) |
| Seal | Carbon / silicon carbide / Viton |

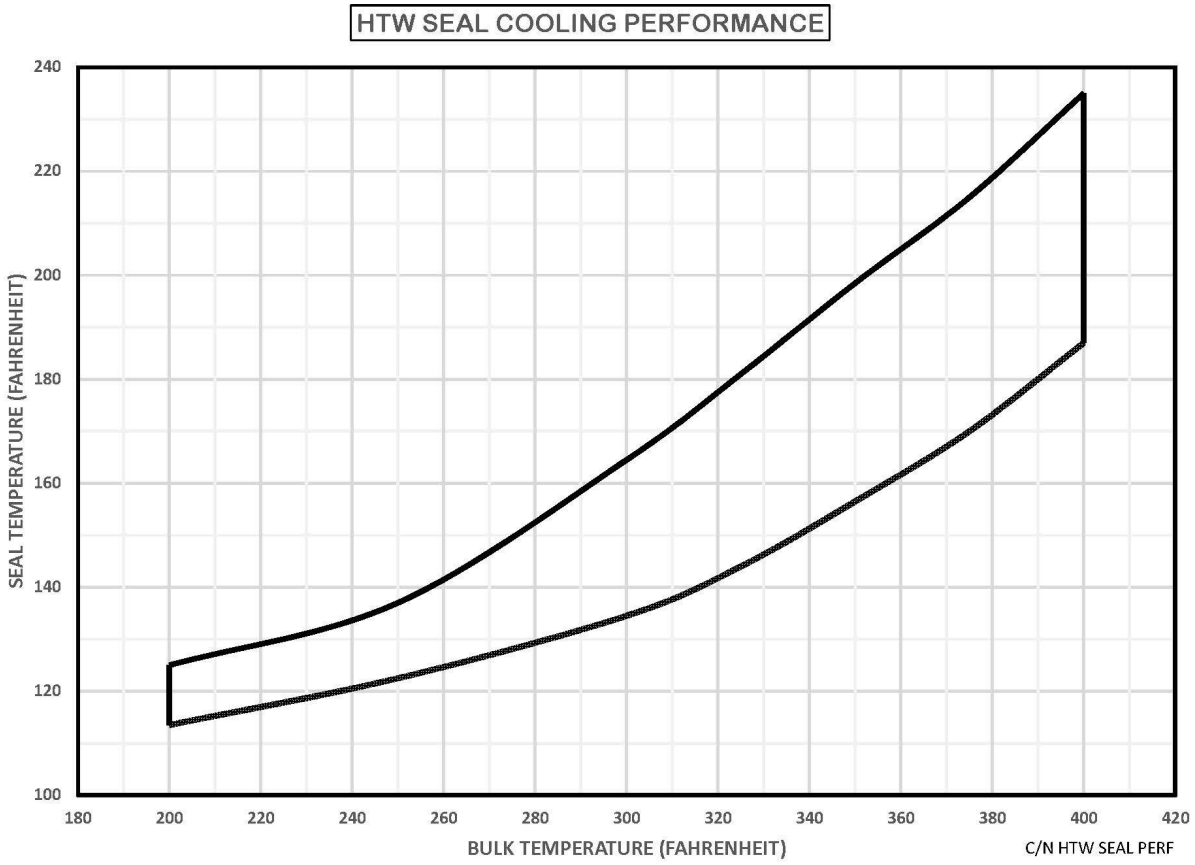


34800 BENNETT - FRASER, MI 48026-1686
(586) 293-8240 - FAX (586) 293-8469
(800) 563-8006 - www.mppumps.com

## HTW Pressure Temperature Limits

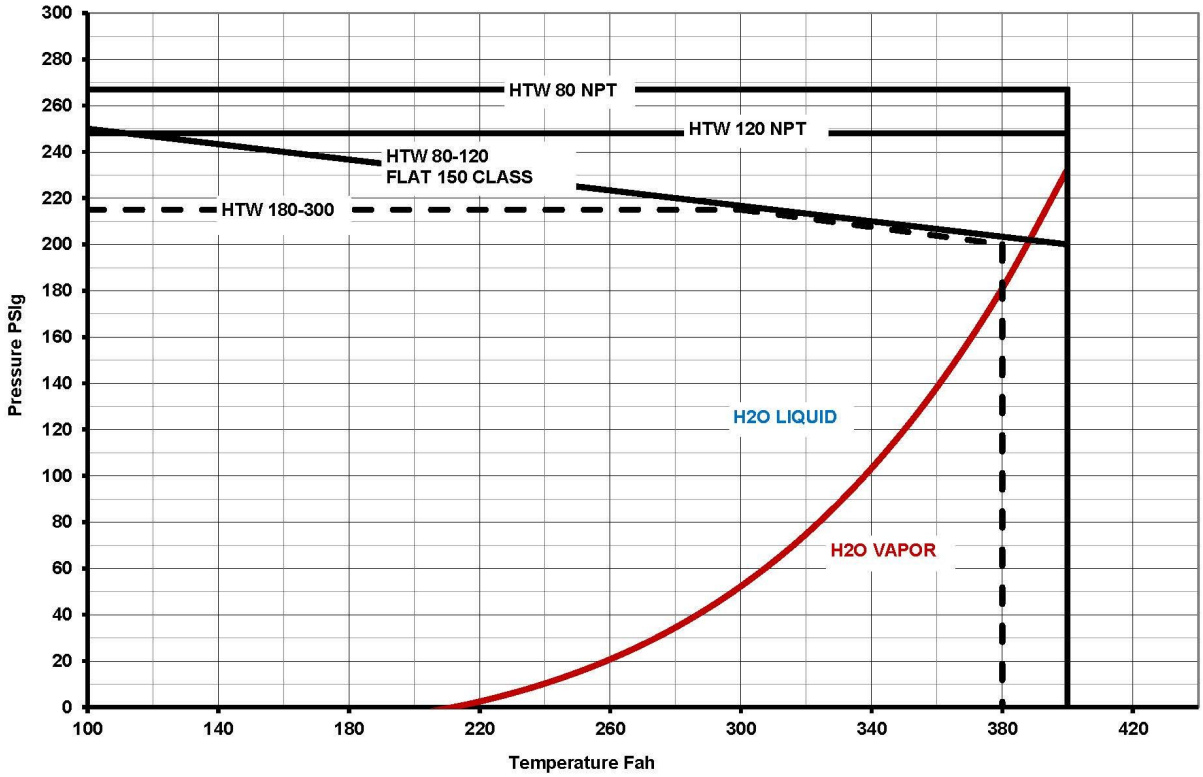


34800 BENNETT - FRASER, MI 48026-1686
(586) 293-8240 - FAX (586) 293-8469
(800) 563-8006 - www.mppumps.com

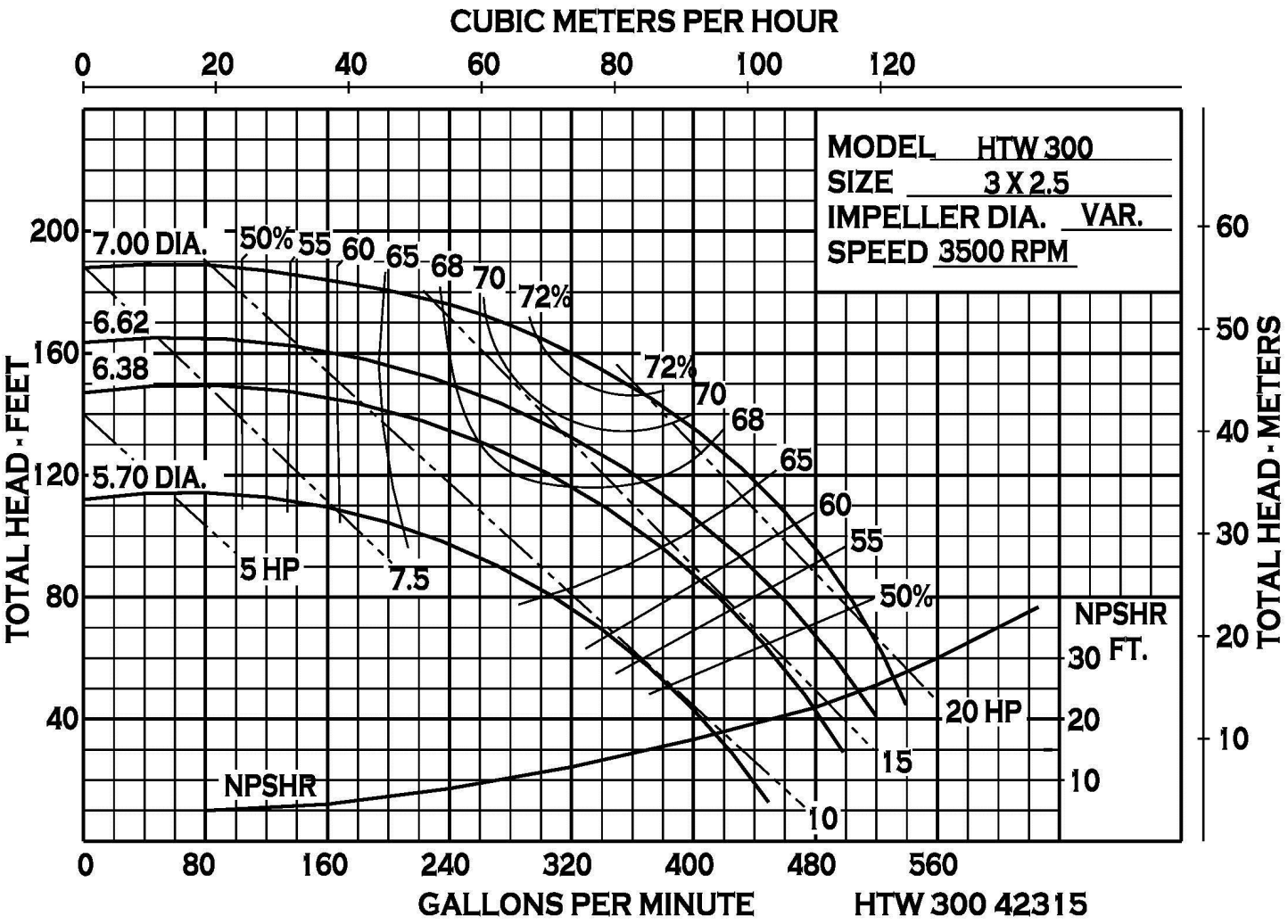


34800 BENNETT - FRASER, MI 48026-1686
(586) 293-8240 - FAX (586) 293-8469
(800) 563-8006 - www.mppumps.com

36636

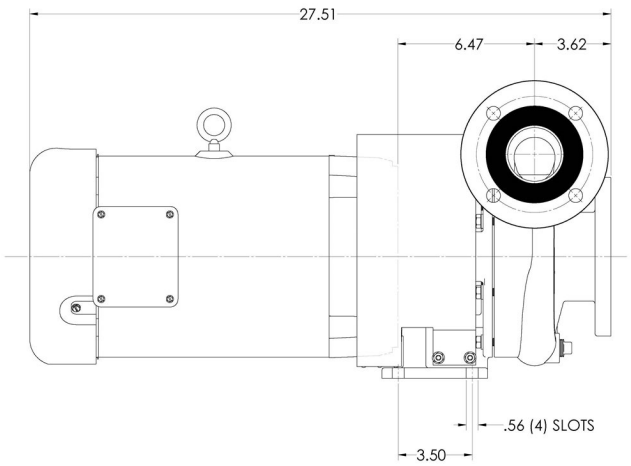


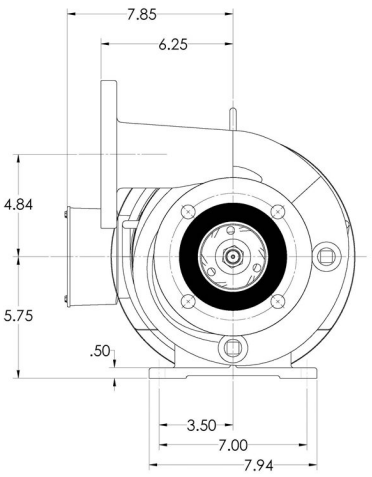


NOTE: THIS DRAWING OR PRINT, PROPERTY OF MP PUMPS, INC., CONTAINS PROPRIETARY AND CONFIDENTIAL INFORMATION. IT SHALL BE USED ONLY AS APPROVED BY MP PUMPS AND SHALL NOT BE GIVEN TO OTHERS OR COPIED WITHOUT THE WRITTEN CONSENT OF MP PUMPS. RETURN TO MP PUMPS PROMPTLY WHEN REQUESTED.

UNLESS OTHERWISE NOTED
THIRD ANGLE PROJECTION
3 PLACE DIM ± .005
2 PLACE DIM ± .01
ANGULAR DIM ± 1°

DO NOT SCALE

MP PUMPS, INC.
FRASER, MICHIGAN 48026, U.S.A.

MATERIAL
MATERIAL SPEC'S

| | DRAWN BY | DATE COMP. | APPROV. | SCALE | MADE FOR | MADE FROM |
|---|---|---|---|---|---|---|
| | SF | 10/8/14 | DD | | | |

| REV | DESCRIPTION | DRAWN | DATE | BY |
|---|---|---|---|---|
| A | ENG. RLS. | SF | 4/27/15 | JM |

NAME
HTW300PMP D:20-3 215TC 6.62

36636

34800 BENNETT - FRASER, MI 48026-1686
(586) 293-8240 - FAX (586) 293-8469
(800) 563-8006 - www.mppumps.com

36636

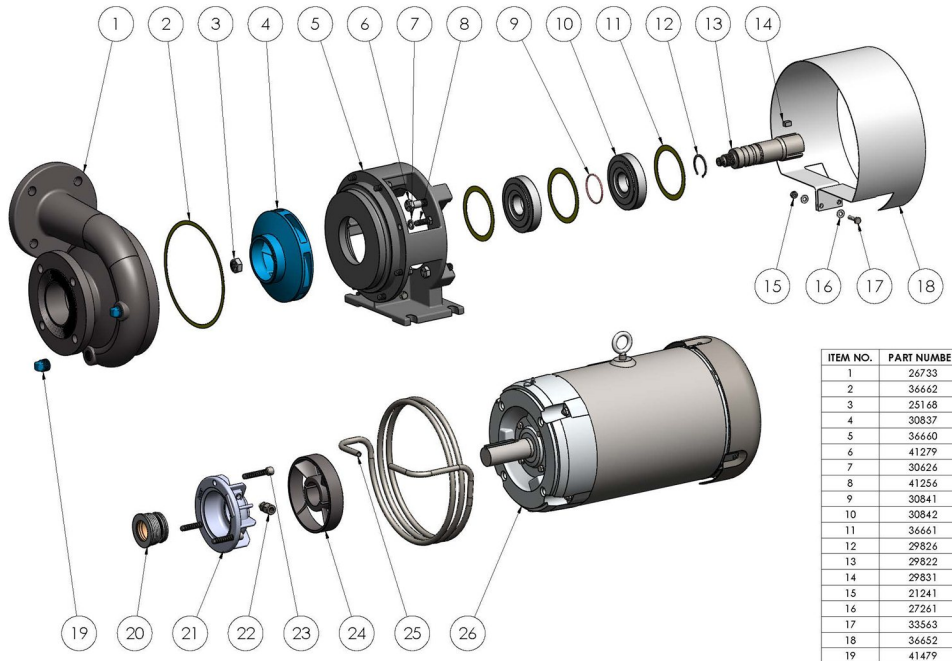


| ITEM NO. | PART NUMBER | DESCRIPTION | MATERIAL | QTY. |
|---|---|---|---|---|
| 1 | 26733 | HOUSING | DUCTILE IRON | 1 |
| 2 | 36662 | GASKET | KLINGER TOP-SIL | 1 |
| 3 | 25168 | HEX JAM NUT 5/8-18 | STEEL | 1 |
| 4 | 30837 | IMPELLER | CAST IRON | 1 |
| 5 | 36660 | ADAPTOR | DUCTILE IRON | 1 |
| 6 | 41279 | CAPSCREW 1/2-13X2 | STEEL | 4 |
| 7 | 30626 | LOCKWASHER | STEEL | 8 |
| 8 | 41256 | CAPSCREW 3/8-16X1 | STEEL | 8 |
| 9 | 30841 | O-RING | VITON | 1 |
| 10 | 30842 | ISOLATOR | CG | 2 |
| 11 | 36661 | GASKET | KLINGER TOP-SIL | 3 |
| 12 | 29826 | SNAP RING | STEEL | 1 |
| 13 | 29822 | DRIVE SLEEVE | 303 STAINLESS STEEL | 1 |
| 14 | 29831 | SQUARE KEY | STEEL | 1 |
| 15 | 21241 | HEXNUT 1/4-20 | 304 STAINLESS STEEL | 2 |
| 16 | 27261 | WASHER | STEEL | 4 |
| 17 | 33563 | CAPSCREW 1/4-20X1 | 304 STAINLESS STEEL | 2 |
| 18 | 36652 | SHIELD | STEEL | 1 |
| 19 | 41479 | PIPE PLUG 1/2 NPT | CAST IRON | 2 |
| 20 | 34933 | SEAL ASSEMBLY | CSC/VITON | 1 |
| 21 | 36639 | HOUSING SEAL | DUCTILE IRON | 1 |
| 22 | 36646 | ADP FITTING | 304 STAINLESS STEEL | 2 |
| 23 | 39600 | CAPSCREW 3/8-16X2 | 304 STAINLESS STEEL | 3 |
| 24 | 29833 | CLAMP FAN ASSEMBLY | DUCTILE IRON/STEEL | 1 |
| 25 | 36635 | HE COIL | 304 STAINLESS STEEL | 1 |
| 26 | 31294 | ELECTRIC MOTOR | TEFC | 1 |

NOTE: THIS DRAWING OR PRINT, PROPERTY OF MP PUMPS, INC., CONTAINS PROPRIETARY AND CONFIDENTIAL INFORMATION. IT SHALL BE USED ONLY AS APPROVED BY MP PUMPS AND SHALL NOT BE GIVEN TO OTHERS OR COPIED WITHOUT THE WRITTEN CONSENT OF MP PUMPS., RETURN TO MP PUMPS PROMPTLY WHEN REQUESTED.

UNLESS OTHERWISE NOTED THIRD ANGLE PROJECTION

3 PLACE DIM ± .005
2 PLACE DIM ± .01
ANGULAR DIM ± 1°

DO NOT SCALE

MP PUMPS, INC.
FRASER, MICHIGAN 48026, U.S.A.

MATERIAL

MATERIAL SPECS

| | DRAWN BY | DATE COMP | APPROV. | SCALE | SHEET SIZE | SHEET NO. |
|---|---|---|---|---|---|---|
| | SF | 10/8/14 | DD | | | |

| | | | | |
|---|---|---|---|---|
| G | | | | |
| F | | | | |
| E | | | | |
| D | | | | |
| C | | | | |
| B | | | | |
| A | ENG. RLS. | SF | 4/27/15 | JM |
| NO. | DESCRIPTION | DRAWN | DATE | BY |

NAME
HTW300PMP D:20-3 215TC 6.62

36636