CALL TOLL FREE 877-742-2878 FOR SALES AND SUPPORT
Return to BurtProcess.com

HYDRASUB 20

2" Submersible Centrifugal Pump

HYDRASUB 20 is a compact, lightweight, hydraulically driven submersible pump with high flow capabilities. This self-priming pump is made with a high strength aluminum alloy that is anodized for corrosion resistance. This pump features a stainless steel impeller, ball bearing, and a gerotor type hydraulic motor.



SPECIFICATIONS:

Materials Of Construction	Aluminum
Flow	Up to 300 GPM
Head Feet	Up to 76'
Impeller	3.90" stainless steel
Drive Options	Hydraulic motor .22 cu. in, Hydraulic motor .37 cu. in., Hydraulic motor .45 cu. in.
Discharge	2" NPT with A-Type cam and groove fitting included
Max Solid Size	Up to 1/2”

Application

- Agricultural
- Industrial
- Marine
- OEM

Features

- Carrying handle provided
- Compact, lightweight design
- Corrosion resistant
- Pumps down to a depth of 3/4"
- Quiet operation with gerotor motor
- Self-priming, can run dry without damage

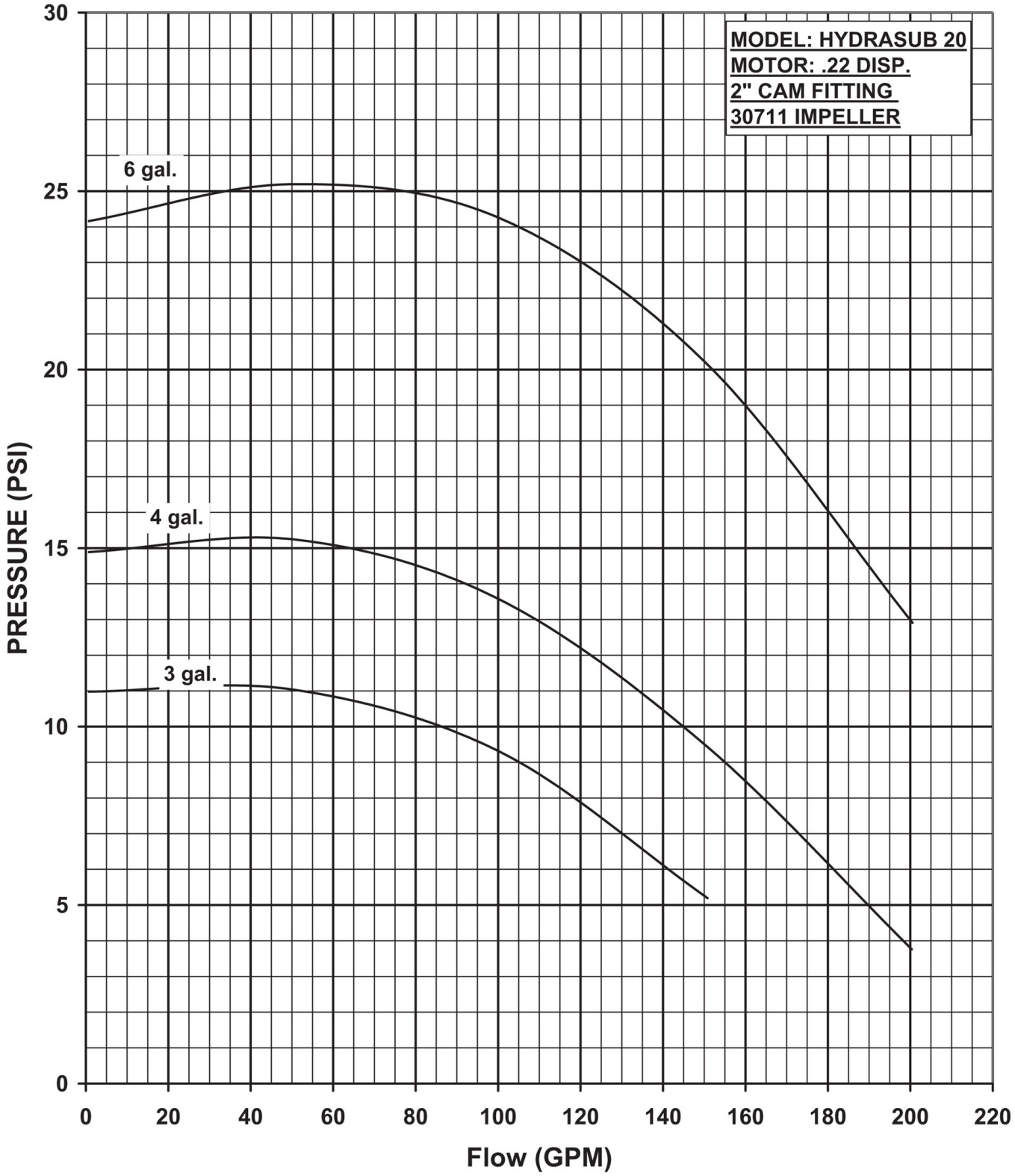

OIL FLOW	SHUT OFF 0 GPM	20 GPM	40 GPM	60 GPM	80 GPM	100 GPM	120 GPM	140 GPM	160 GPM	180 GPM	200 GPM	MAX. HYD. OIL PRESS. REQ.
3 GPM	11 PSI	11 PSI	11 PSI	10 PSI	10 PSI	9 PSI	8 PSI	6 PSI				1550 PSI
4 GPM	15 PSI	15 PSI	15 PSI	15 PSI	15 PSI	14 PSI	12 PSI	10 PSI	8 PSI	6 PSI	4 PSI	1900 PSI
6 GPM	24 PSI	25 PSI	25 PSI	25 PSI	25 PSI	24 PSI	23 PSI	21 PSI	19 PSI	16 PSI	13 PSI	2700 PSI

CN 7117-S

34800 BENNETT - FRASER, MI 48026-1686
(586) 293-8240 - FAX (586) 293-8469
(800) 563-8006 - www.mppumps.com

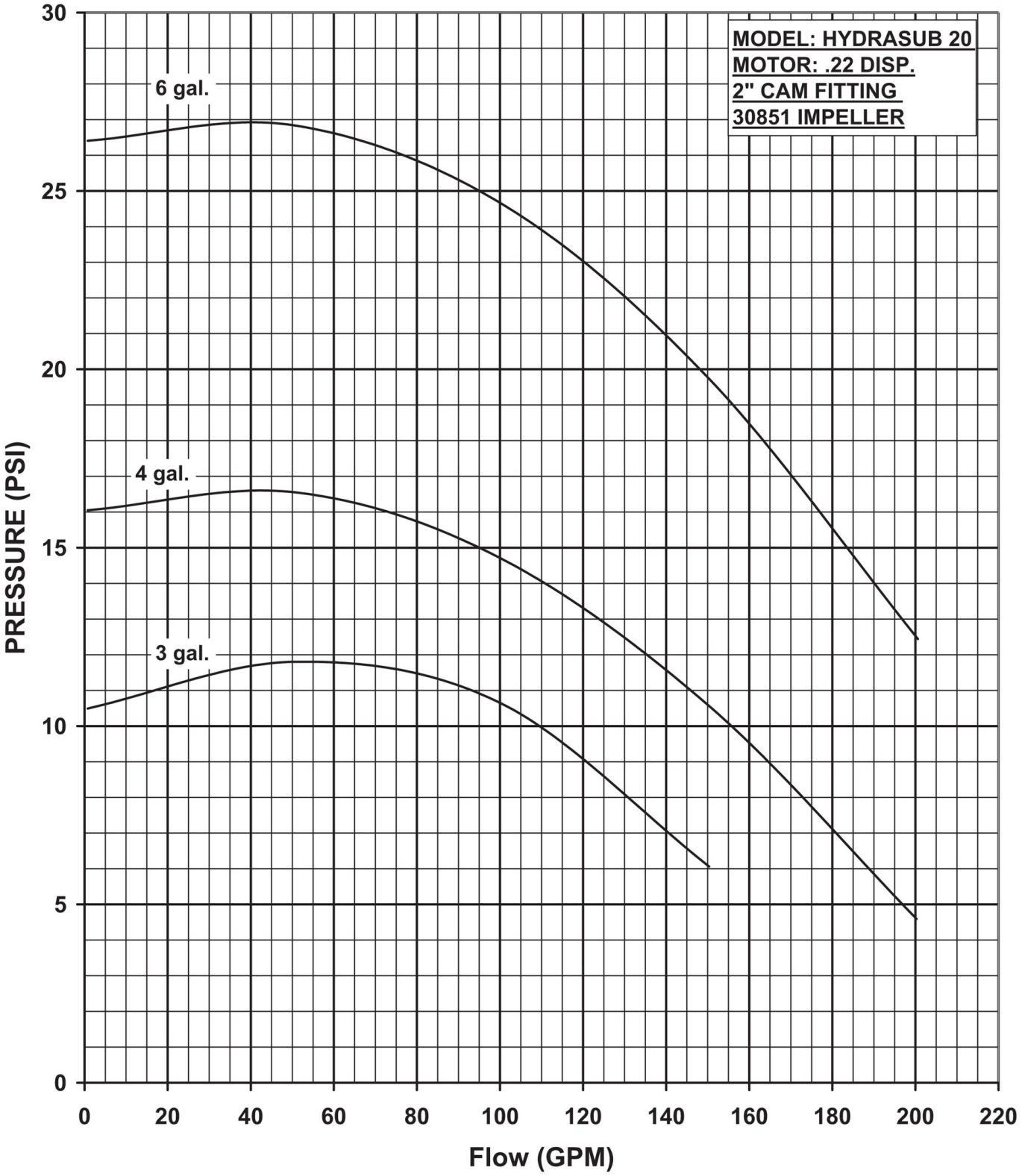

OIL FLOW	SHUT OFF 0 GPM	20 GPM	40 GPM	60 GPM	80 GPM	100 GPM	120 GPM	140 GPM	160 GPM	180 GPM	200 GPM	MAX. HYD. OIL PRESS. REQ.
3 GPM	10 PSI	10 PSI	10 PSI	11 PSI	12 PSI	11 PSI	9 PSI	8 PSI				1850 PSI
4 GPM	16 PSI	16 PSI	17 PSI	16 PSI	16 PSI	15 PSI	13 PSI	12 PSI	9 PSI	7 PSI	5 PSI	2200 PSI
6 GPM	27 PSI	27 PSI	27 PSI	27 PSI	26 PSI	25 PSI	23 PSI	21 PSI	18 PSI	15 PSI	12 PSI	2800 PSI

CN 7116-S

34800 BENNETT - FRASER, MI 48026-1686
(586) 293-8240 - FAX (586) 293-8469
(800) 563-8006 - www.mppumps.com

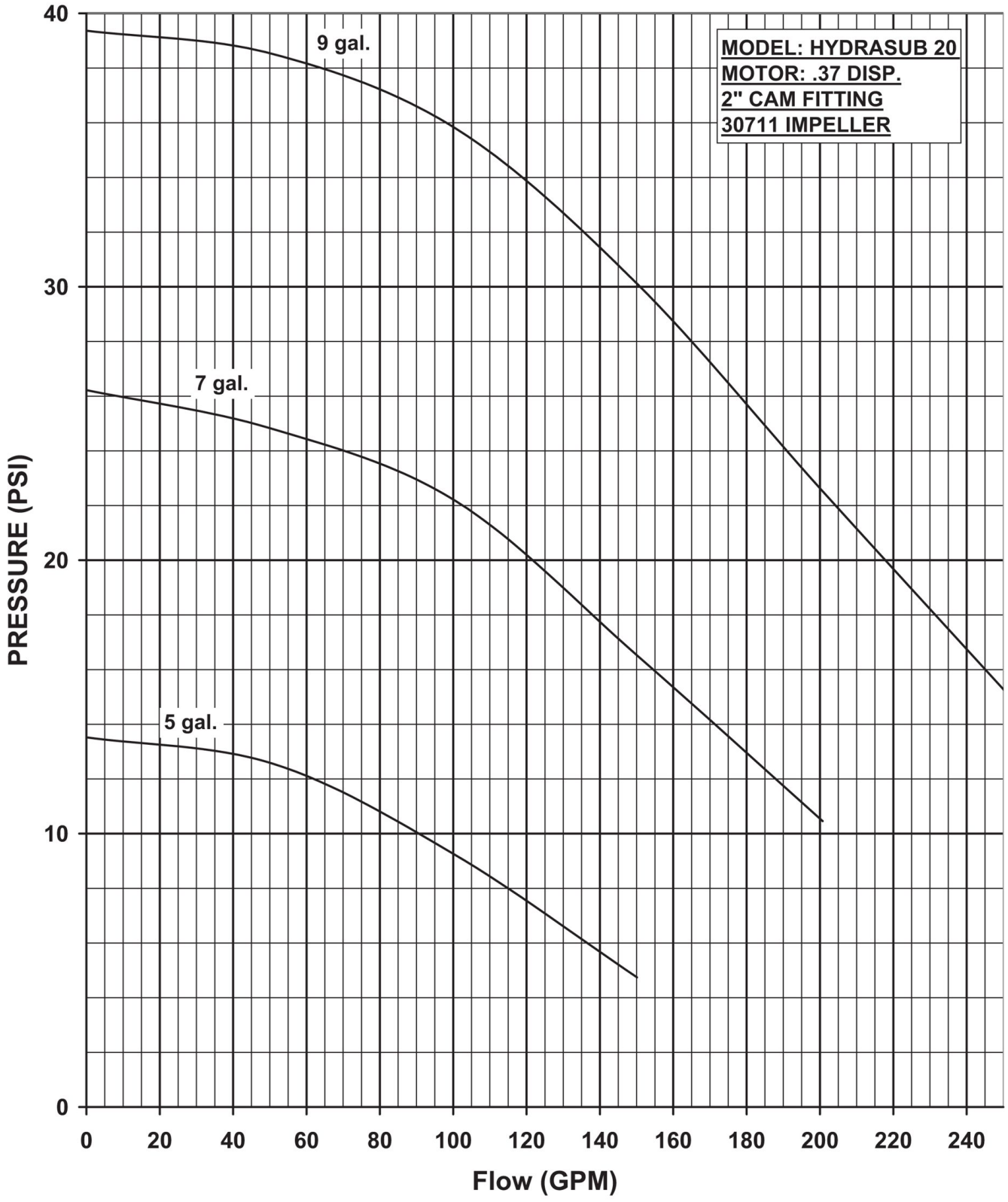

OIL FLOW	SHUT OFF 0 GPM	20 GPM	40 GPM	60 GPM	80 GPM	100 GPM	120 GPM	140 GPM	160 GPM	180 GPM	200 GPM	220 GPM	240 GPM	MAX. HYD. OIL PRESS. REQ.
5 GPM	14 PSI	14 PSI	13 PSI	13 PSI	12 PSI	9 PSI	7 PSI	6 PSI						730 PSI
7 GPM	27 PSI	26 PSI	25 PSI	24 PSI	24 PSI	23 PSI	20 PSI	18 PSI	16 PSI	13 PSI	11 PSI			1290 PSI
9 GPM	39 PSI	38 PSI	38 PSI	37 PSI	37 PSI	36 PSI	34 PSI	32 PSI	28 PSI	26 PSI	23 PSI	18 PSI	17 PSI	1850 PSI

CN 7096-S

34800 BENNETT - FRASER, MI 48026-1686
(586) 293-8240 - FAX (586) 293-8469
(800) 563-8006 - www.mppumps.com

HYDRASUB 20

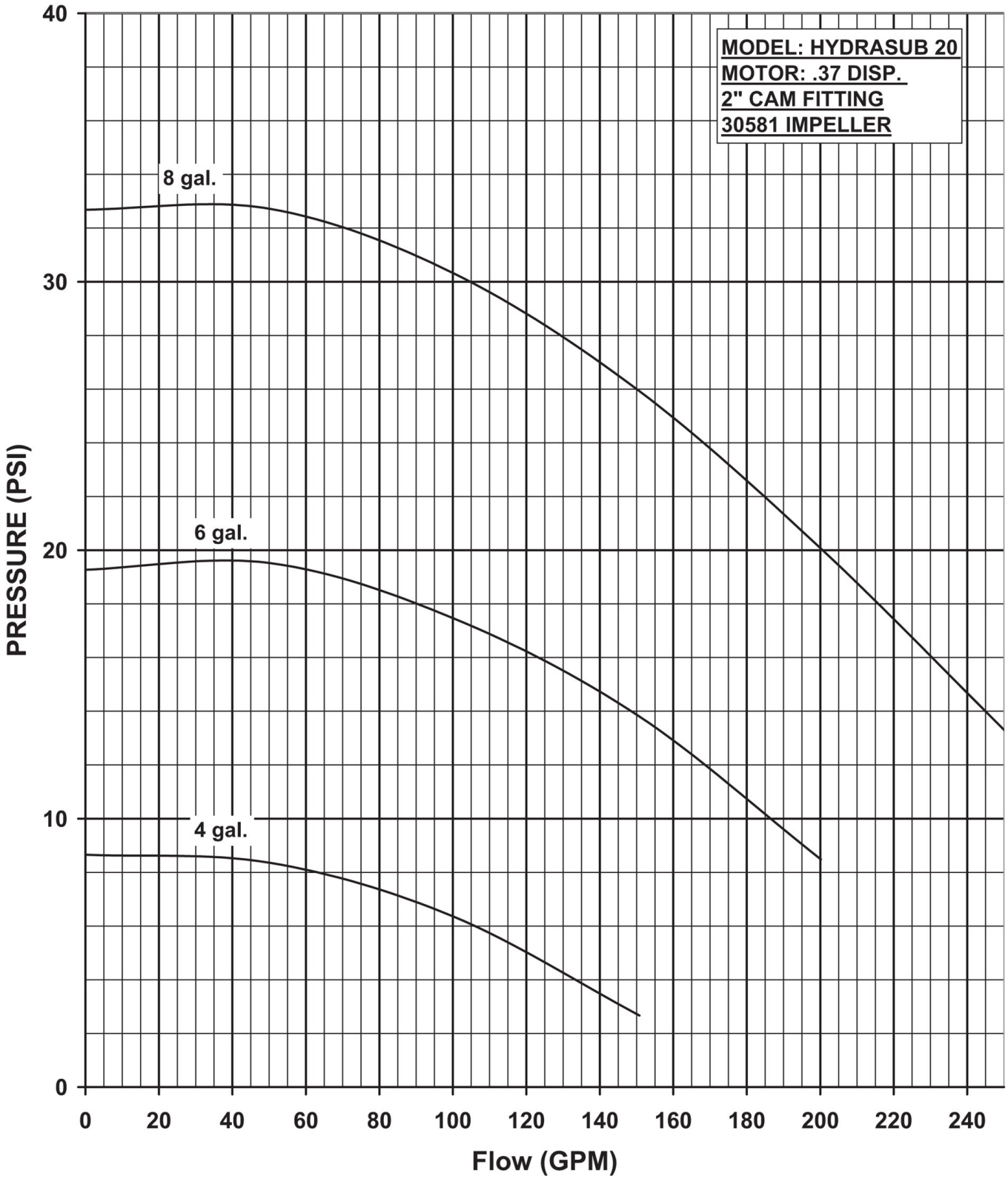

OIL FLOW	SHUT OFF	20	40	60	80	100	120	140	160	180	200	220	240	MAX. HYD. OIL PRESS.REQ.
	0 GPM	GPM	GPM	GPM	GPM	GPM	GPM	GPM	GPM	GPM	GPM	GPM	GPM	
4 GPM	8 PSI	8 PSI	8 PSI	8 PSI	7 PSI	6 PSI	5 PSI	4 PSI						700
6 GPM	19 PSI	19 PSI	19 PSI	19 PSI	18 PSI	17 PSI	16 PSI	15 PSI	16 PSI	11 PSI	8 PSI			1350
8 GPM	33 PSI	33 PSI	33 PSI	33 PSI	32 PSI	29 PSI	28 PSI	27 PSI	25 PSI	23 PSI	20 PSI	17 PSI	13 PSI	1980

CN 7097-S

MP PUMPS by Gardner Denver

34800 BENNETT - FRASER, MI 48026-1686
(586) 293-8240 - FAX (586) 293-8469
(800) 563-8006 - www.mppumps.com

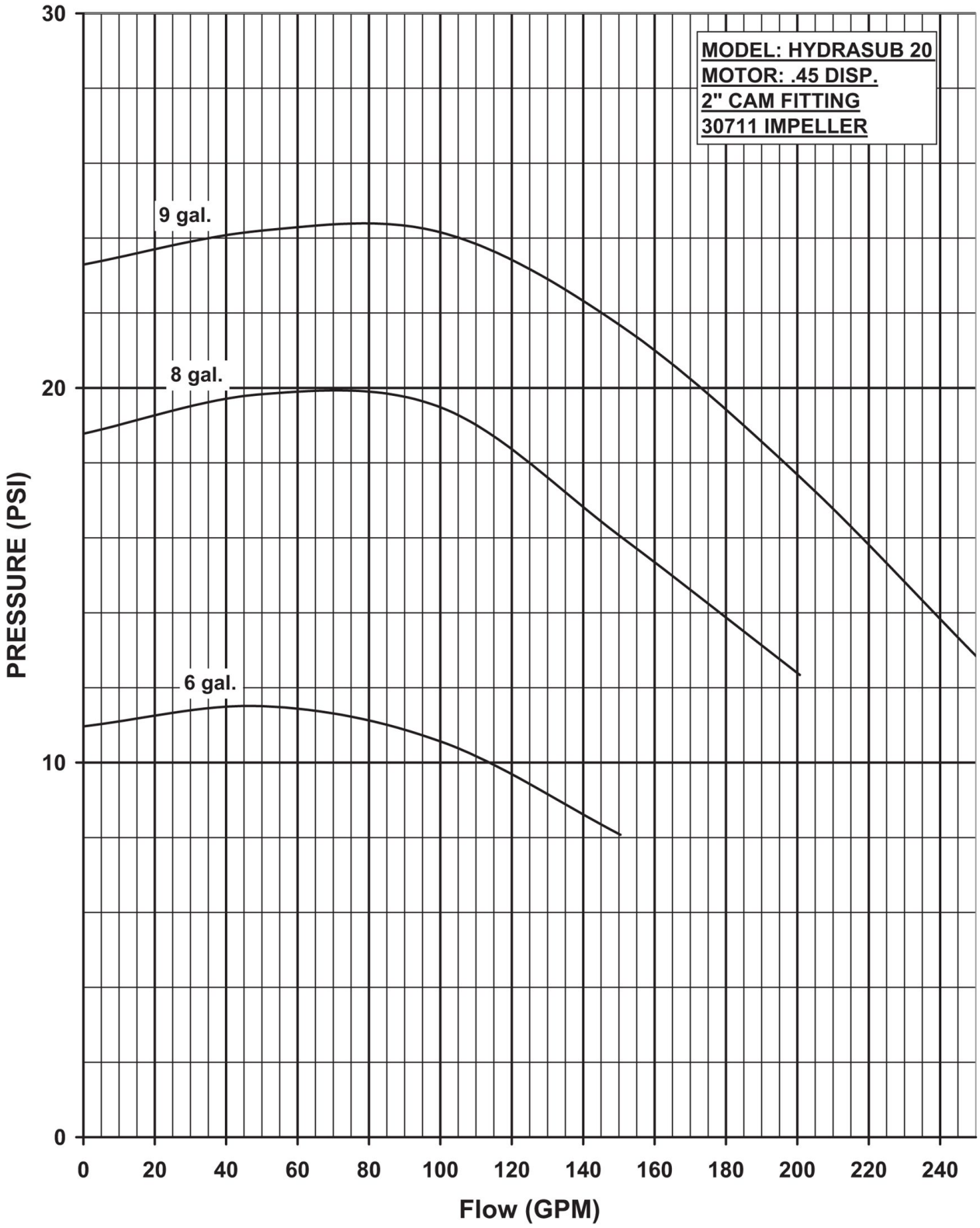

OIL FLOW	SHUT OFF	20	40	60	80	100	120	140	160	180	200	220	240	MAX. HYD. OIL PRESS..
	0 GPM	GPM	GPM	GPM	GPM	GPM	GPM	GPM	GPM	GPM	GPM	GPM	GPM	
6 GPM	11 PSI	12 PSI	12 PSI	12 PSI	12 PSI	11 PSI	9 PSI	8 PSI						760 PSI
8 GPM	18 PSI	19 PSI	20 PSI	20 PSI	20 PSI	20 PSI	18 PSI	16 PSI	15 PSI	14 PSI	13 PSI			1230 PSI
9 GPM	24 PSI	24 PSI	24 PSI	24 PSI	24 PSI	24 PSI	24 PSI	23 PSI	22 PSI	19 PSI	17 PSI	16 PSI	13 PSI	1450 PSI

CN 7098-S

34800 BENNETT - FRASER, MI 48026-1686
(586) 293-8240 - FAX (586) 293-8469
(800) 563-8006 - www.mppumps.com

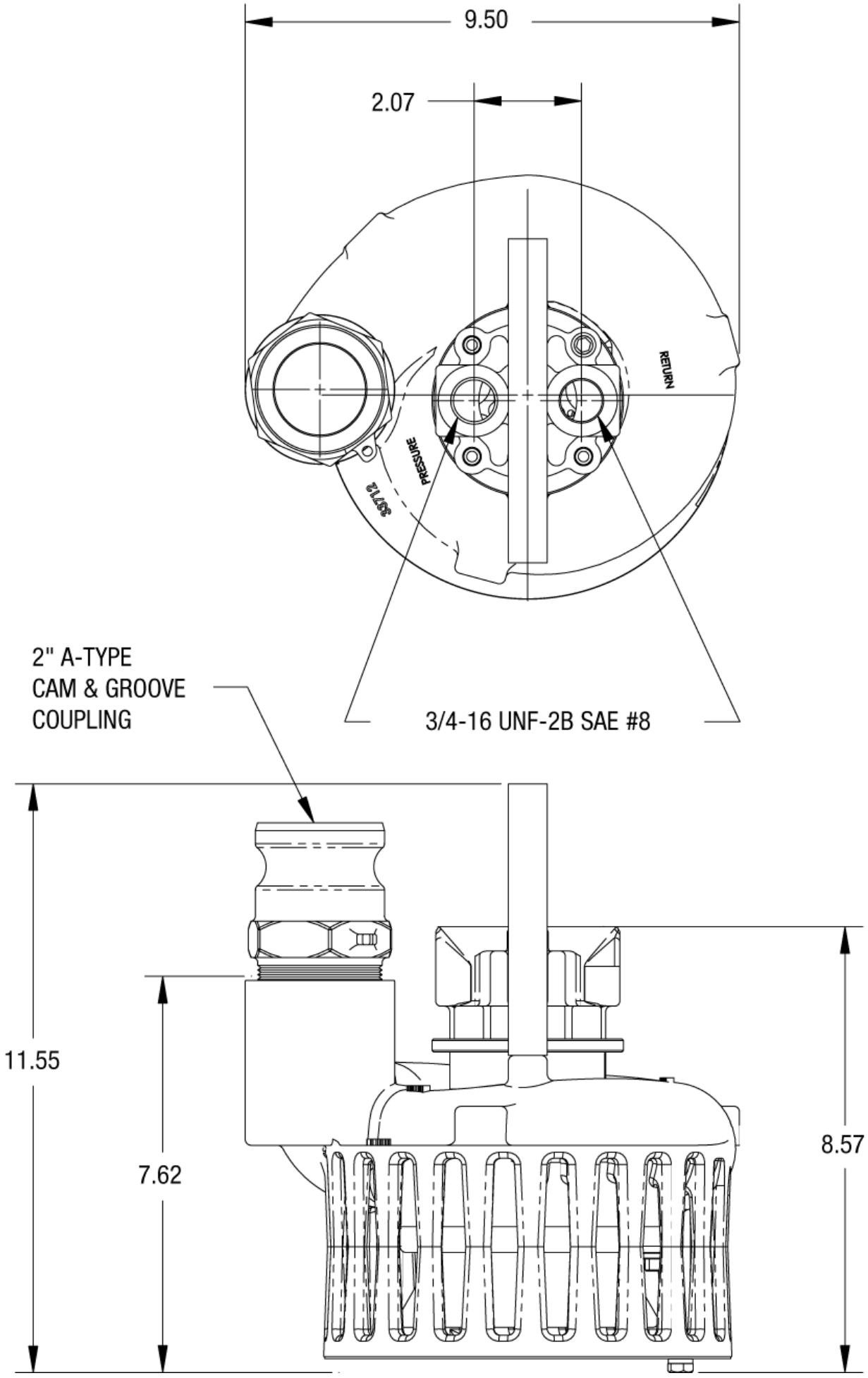

34800 BENNETT - FRASER, MI 48026-1686
(586) 293-8240 - FAX (586) 293-8469
(800) 563-8006 - www.mppumps.com

35585

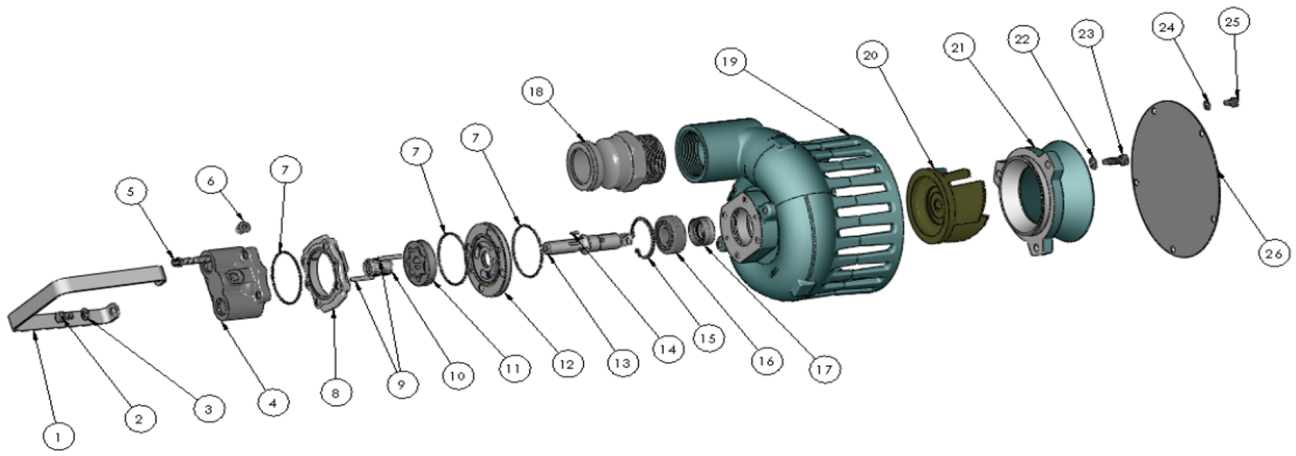

	ITEM NO.	PART NO.	DESCRIPTION	QTY.		ITEM NO.	PART NO.	DESCRIPTION	QTY.
	1	33778	HANDLE STL.	1		14	29044	DOWEL PIN STL. 1/8 X 3/8 LG.	1
	2	30320	HEX HEAD CAP SCREW S.S. 5/16-18 X 1/2	2		15	33742	SNAP RING STL.	1
	3	21238	LOCK WASHER S.S. 5/16 X 1/8	2		16	27556	BALL BEARING	1
	4	36316	HYDRAULIC MOTOR COVER	1	*	17	33718	LIP SEAL VITON	2
	5	29029	12 POINT SCREW 5/16-24	4		18	34022	HOSE ADAPTER 2" NPT	1
	6	35635	PORT PLUG 7/16-20 UNF SAE #4 W/ORING	1		19	33713	HOUSING HYDRASUB	1
*	7	34054	QUAD RING VITON	3		20	30711	IMPELLER S.S. 5 BLADE	1
	8	36320	SPACER C.I. - .37 DISP	1		21	33715	SUCTION FLANGE AL. HYDRASUB	1
	9	36370	DOWEL PIN .19 X 1.12 LG.	2		22	21238	LOCKWASHER S.S. 5/16 X 1/8	3
	10	29046	NEEDLE BEARING	1		23	21242	HEX HEAD CAP SCREW S.S. 5/16-18 X 7/8	3
*	11	29045	GEROTOR ASSY. - .37 DISP.	1		24	33564	LOCK WASHER S.S. 1/4"	5
	12	35726	THRUST PLATE ASSY.	1		25	30551	HEX HEAD CAPSCREW S.S. 1/4-20 X 3/8	5
*	13	33720	SHAFT STL. HYDRASUB	1		26	33716	COVER PLATE S.S.	1

34800 BENNETT - FRASER, MI 48026-1686
(586) 293-8240 - FAX (586) 293-8469
(800) 563-8006 - www.mppumps.com