CALL TOLL FREE 877-742-2878 FOR SALES AND SUPPORT
Return to BurtProcess.com

HYDRASUB 25

2-1/2" Submersible Centrifugal Pump

HYDRASUB 25 is a compact, lightweight, hydraulically driven submersible pump with high flow capabilities. This self-priming pump is made with a high strength aluminum alloy that is anodized for corrosion resistance. This pump features a stainless steel impeller, ball bearing, and a gerotor type hydraulic motor.



SPECIFICATIONS:

Materials Of Construction	Aluminum
Flow	Up to 430 GPM
Head Feet	Up to 97'
Impeller	3.90" stainless steel
Drive Options	Hydraulic motor .45 cu. in., Hydraulic motor .58 cu. in.
Discharge	2-1/2" NPT with A-type cam and groove fitting included
Max Solid Size	Up to 1/2”

Application

- Agricultural
- Industrial
- Marine
- OEM

Features

- Carrying handle
- Compact, lightweight design
- Corrosion resistant
- Pumps down to a depth of 3/4"
- Quiet operation with gerotor motor
- Self-priming, can run dry without damage

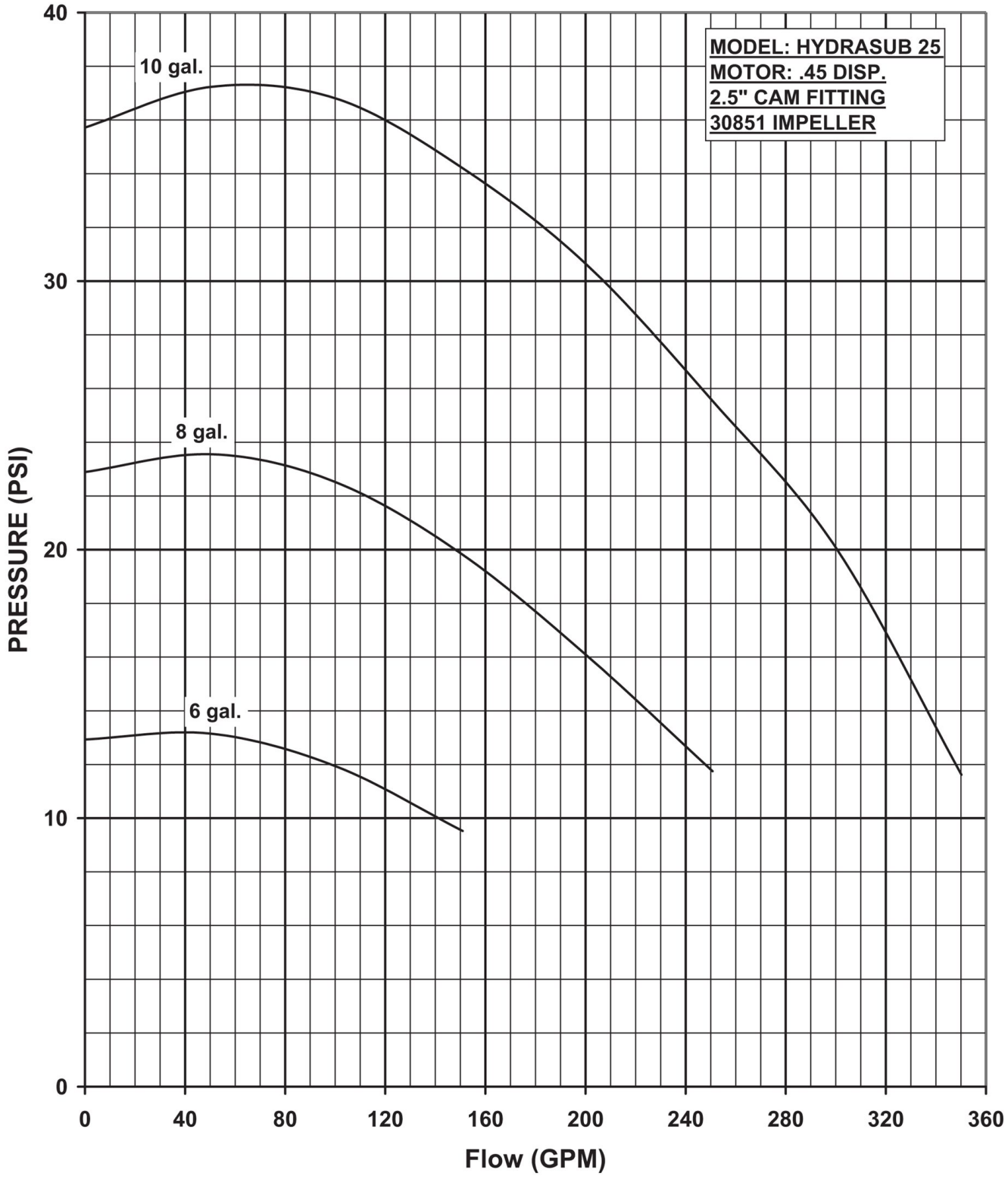

OIL FLOW	SHUT OFF 0 GPM	40 GPM	80 GPM	120 GPM	160 GPM	200 GPM	240 GPM	280 GPM	320 GPM	360 GPM	MAX. HYD. OIL PRESS. REQ.
6 GPM	13 PSI	13 PSI	13 PSI	12 PSI							850 PSI
8 GPM	23 PSI	24 PSI	23 PSI	22 PSI	19 PSI	17 PSI	12 PSI				1500 PSI
10 GPM	36 PSI	38 PSI	37 PSI	36 PSI	34 PSI	31 PSI	27 PSI	23 PSI	17 PSI		2150 PSI

CN 7099-S

34800 BENNETT - FRASER, MI 48026-1686
(586) 293-8240 - FAX (586) 293-8469
(800) 563-8006 - www.mppumps.com

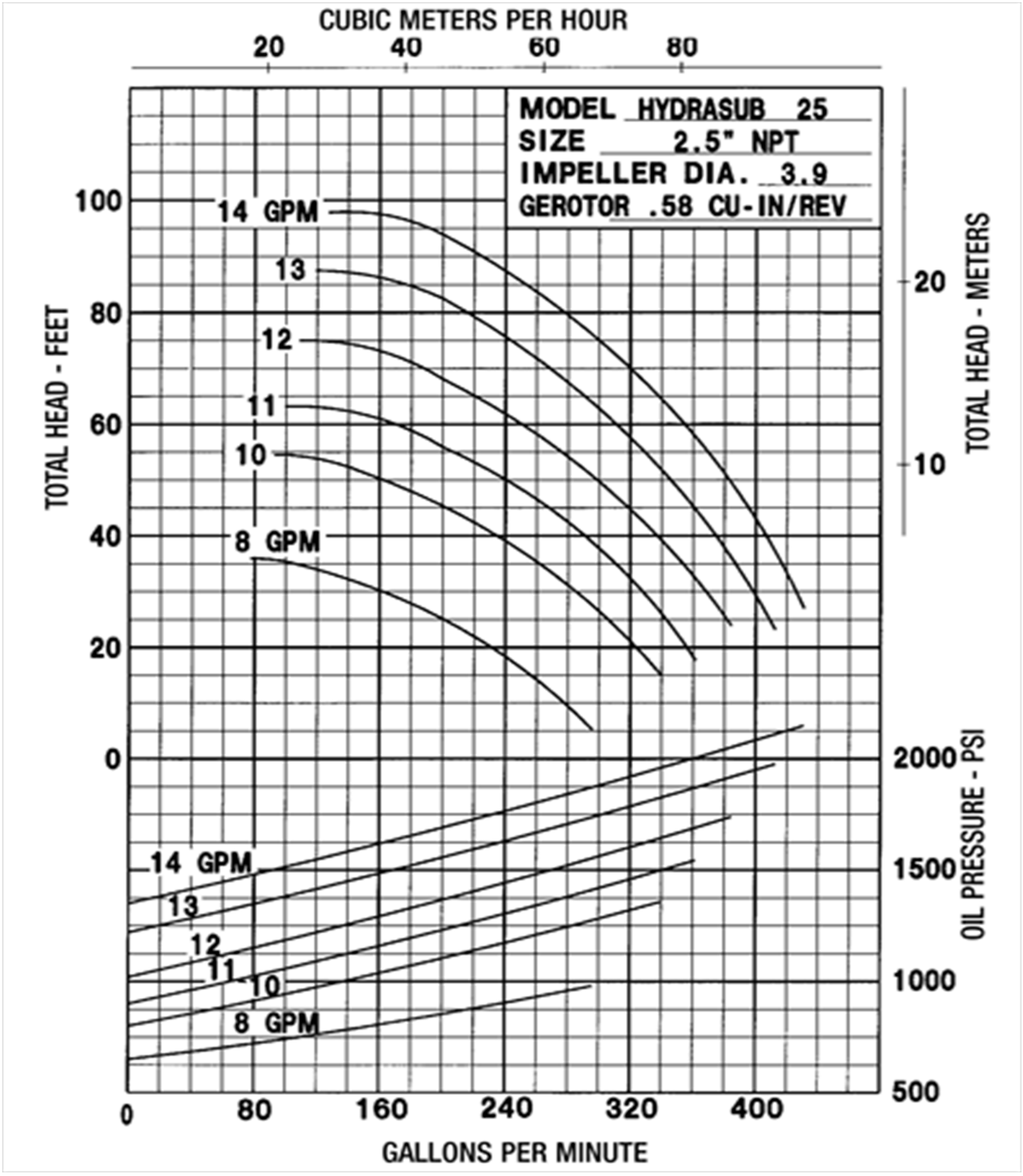

34800 BENNETT - FRASER, MI 48026-1686
(586) 293-8240 - FAX (586) 293-8469
(800) 563-8006 - www.mppumps.com

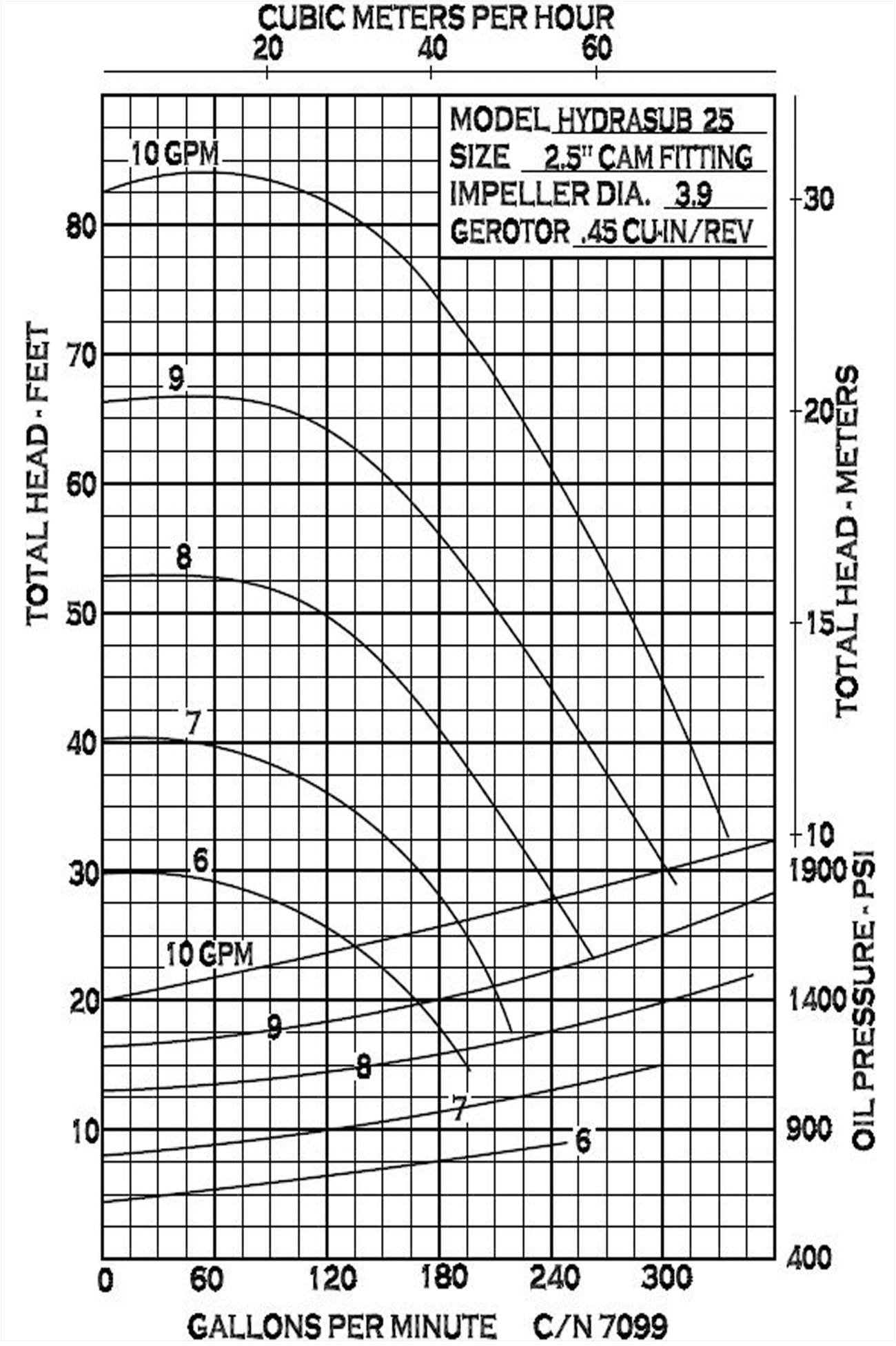

34800 BENNETT - FRASER, MI 48026-1686
(586) 293-8240 - FAX (586) 293-8469
(800) 563-8006 - www.mppumps.com

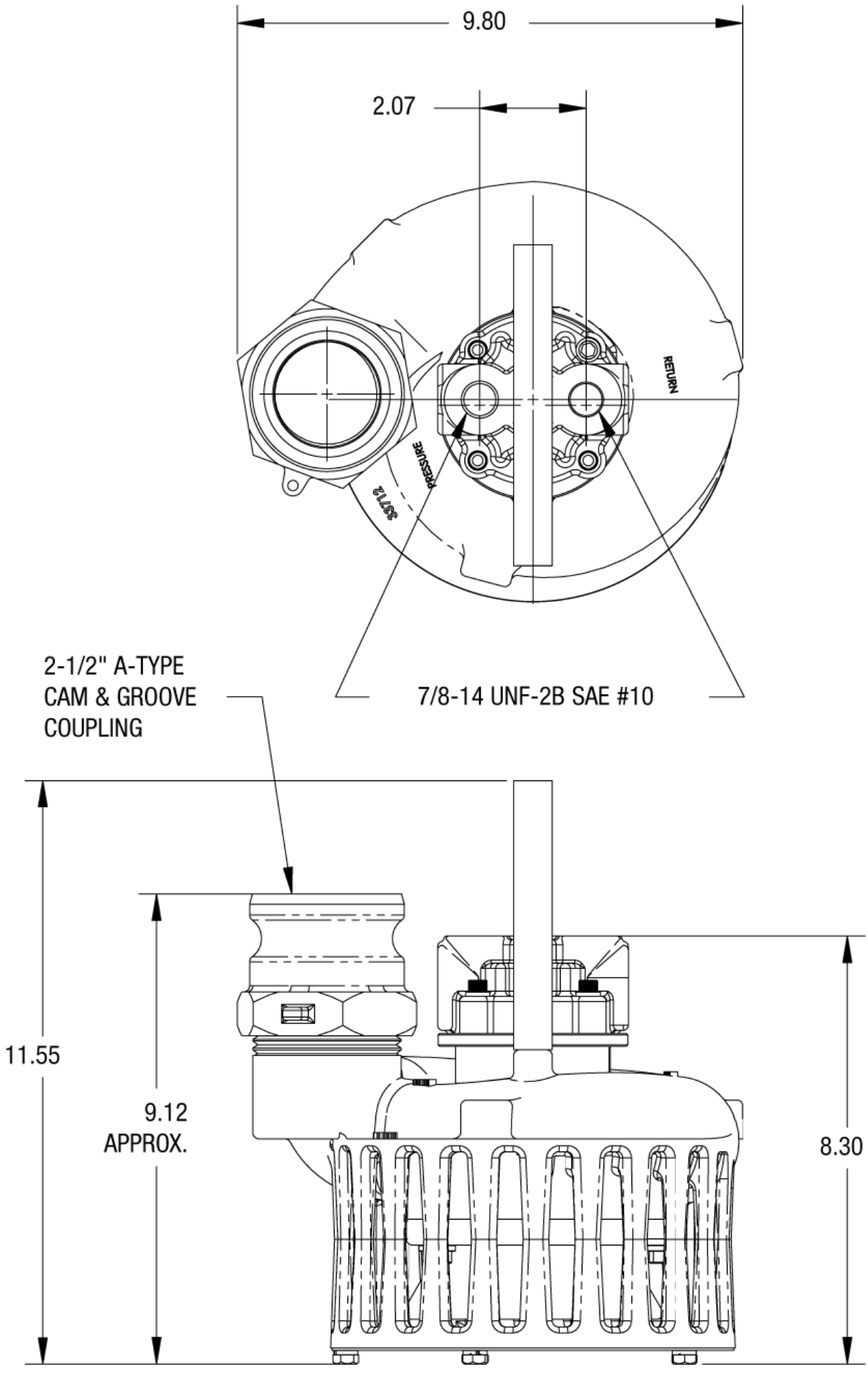

34800 BENNETT - FRASER, MI 48026-1686
(586) 293-8240 - FAX (586) 293-8469
(800) 563-8006 - www.mppumps.com

HYDRASUB 25

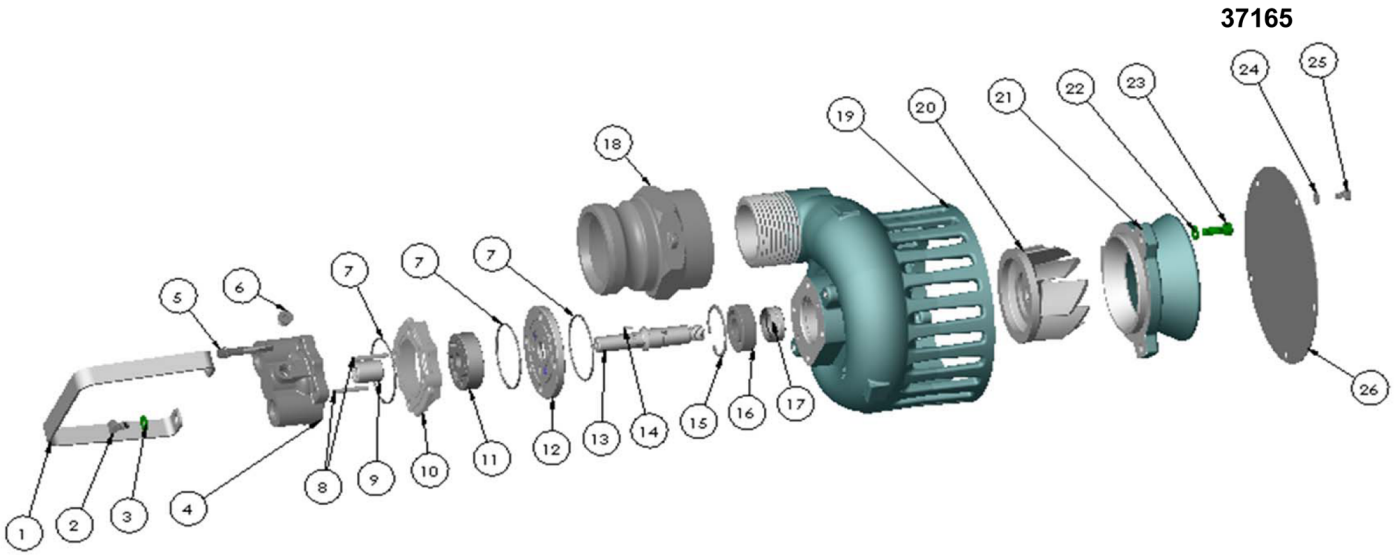

	ITEM NO.	PART NO.	DESCRIPTION	QTY.		ITEM NO.	PART NO.	DESCRIPTION	QTY.
	1	33778	HANDLE STL.	1		14	29044	DOWEL PIN STL. 1/8 X 3/8 LG.	1
	2	30320	HEX HEAD CAP SCREW S.S. 5/16-18 X 1/2	2		15	33742	SNAP RING STL.	1
	3	21238	LOCK WASHER S.S. 5/16 X 1/8	2		16	27556	BALL BEARING	1
	4	36316	HYDRAULIC MOTOR COVER	1	*	17	33718	LIP SEAL VITON	2
	5	34030	12 POINT SCREW 5/16-24	4		18	34023	HOSE ADAPTER 2.5" NPT	1
	6	35635	PORT PLUG 7/16-20 UNF SAE #4 W/ORING	1		19	33783	HOUSING HYDRASUB	1
*	7	34054	QUAD RING VITON	3		20	30851	IMPELLER S.S. 8 BLADE	1
	8	36469	DOWEL PIN .19 X 1.38 LG.	2		21	33715	SUCTION FLANGE AL. HYDRASUB	1
	9	29046	NEEDLE BEARING	1		22	21238	LOCKWASHER S.S. 5/16 X 1/8	3
	10	36326	SPACER C.I. - .58 DISP	1		23	21242	HEX HEAD CAP SCREW S.S. 5/16-18 X 7/8	3
*	11	30354	GEROTOR ASSY. - .58 DISP.	1		24	33564	LOCK WASHER S.S. 1/4"	5
	12	35726	THRUST PLATE ASSY.	1		25	30551	HEX HEAD CAPSCREW S.S. 1/4-20 X 3/8	5
*	13	33720	SHAFT STL. HYDRASUB	1		26	33716	COVER PLATE S.S.	1

*- RECOMMENDED REPLACEMENT PARTS

34800 BENNETT - FRASER, MI 48026-1686
(586) 293-8240 - FAX (586) 293-8469
(800) 563-8006 - www.mppumps.com