Volumetric pumps IG series

The Fluid-o-Tech® IG series positive displacement pumps have been designed to handle viscous fluids with impurities in suspension and to withstand relatively high temperatures, while delivering a smooth flow.
Precise by design, they allow accurate and repeatable performance, but also providing high pressure.
Food grade materials are available upon request.
The model comes with a flow rate ranging from 100 l/h to 1500 l/h, with 1/2" GAS ports, o-rings in Viton® and clamp mounting, thermal separation through coupling.
The max rpm are 3500.



MAIN APPLICATIONS

- Fryer machines

TECHNICAL INFORMATION

Pump housing material	Cast Iron G25	Min/max fluid temperature	5/200 °C - 41/392 F
Gears material	Distalloy AE	Wet lift*	> 6 m
Ports	1/2" GAS	Speed range	from 250 to 3500 rpm
Max static pressure	20 bar/290 psi	Unit weight	1.6 Kg

* Priming ability varies with operating conditions and fluid characteristics

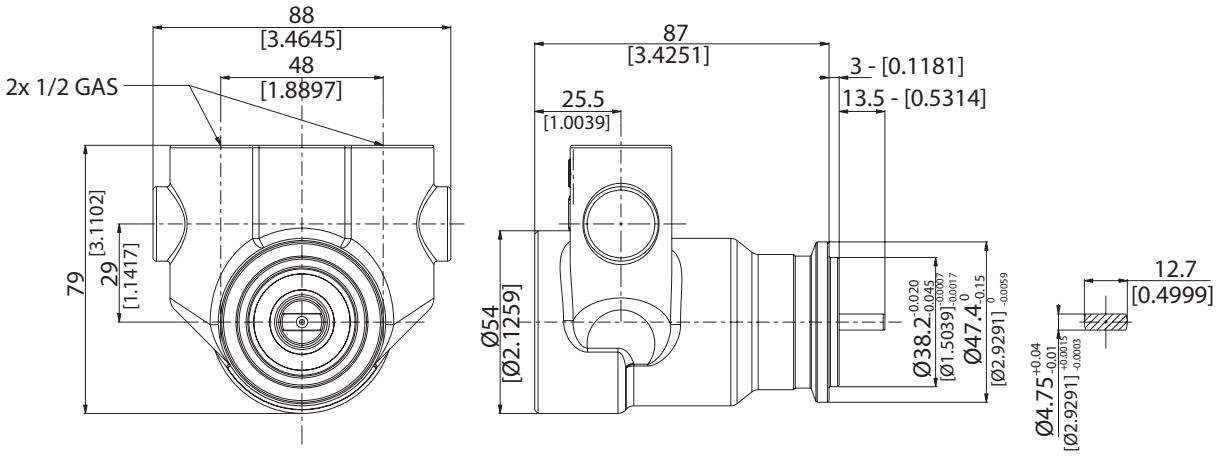

Dimensions in mm [inches]

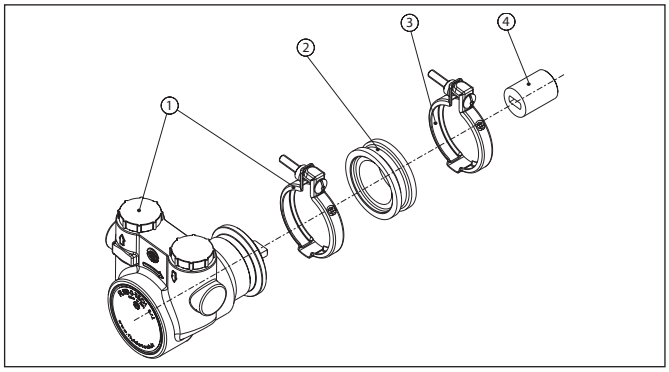

POS	DESCRIPTION	CODE
1	IG series pump	
2	High temperature spacer 48 YZ	92-01-05
3	Clamp	94-80-01
4	Heavy duty cross coupling	91-03-10

IG – 8MM – WHITE OIL 22CST

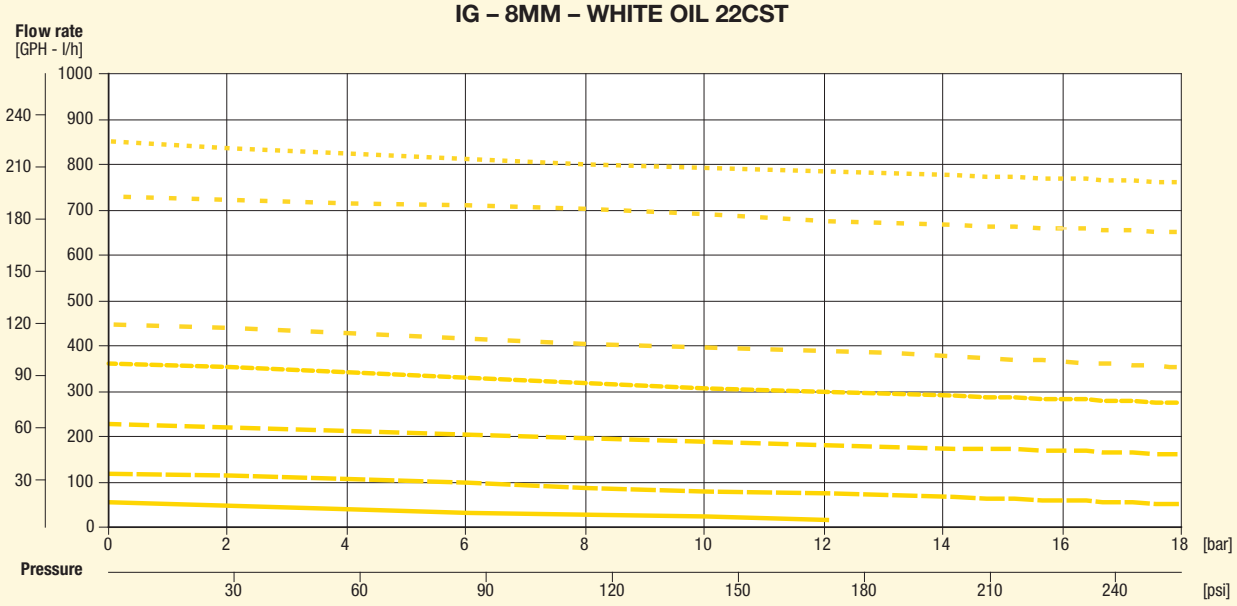

IG – 16 MM – WHITE OIL 22CST

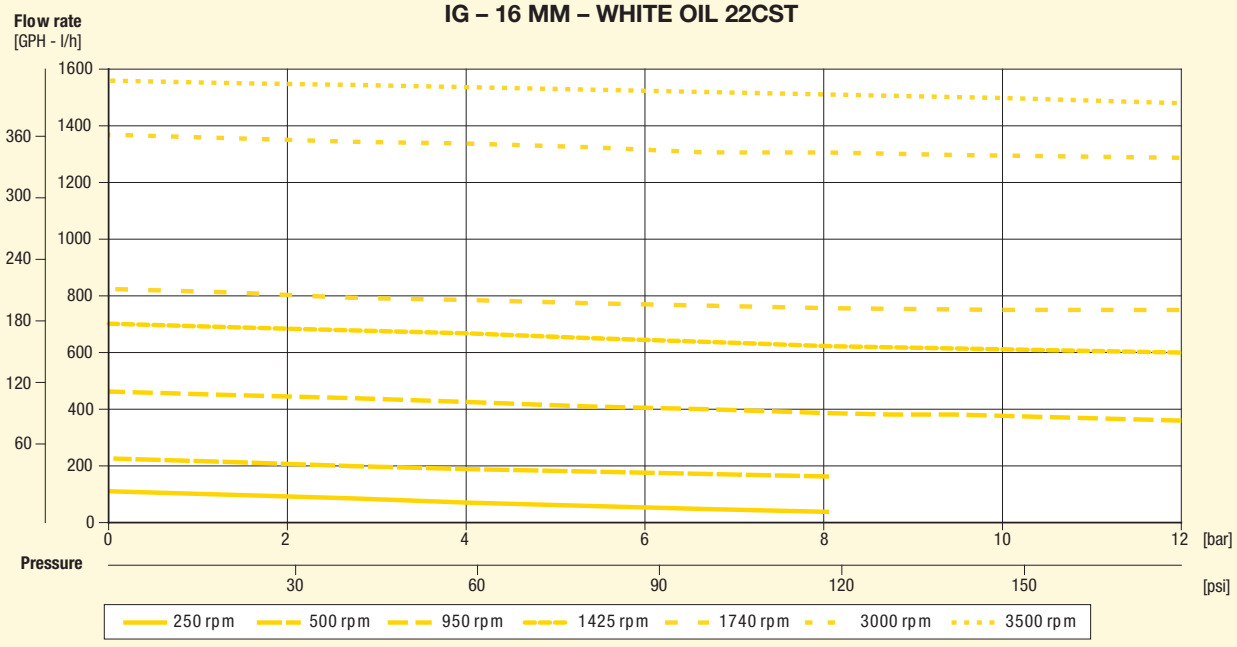

Note: curves obtained at ambient temperature. For applications involving other fluids, high temperatures or unusual processing conditions, please consult the factory or an authorized Fluid-o-Tech distributor.

Fluid-o-Tech reserves the right to alter the specifications indicated in this catalogue at any time and without prior notice.

Fluid-o-Tech srl
Via Leonardo da Vinci, 40
20094 Corsico, Milano, Italy
Tel. +39 02 9995 01
Fax +39 02 9995 0999
info@fluidotech.it

Fluid-o-Tech Int'l Inc.
161 Atwater St.,
06479 Plantsville CT (USA)
Tel. +1 (860) 276 9270
Fax +1 (860) 620 0193
info@fluid-o-tech.com

Fluid-o-Tech Int'l Inc. Japan
2nd Floor, 4-3-8, Espoir Todoroki,
Todoroki, Setagaya, Tokyo 158-0082
Tel. +81 (0) (3) 6432 1812
Fax +81 (0) (3) 6432 1813
erkkato@fluidotech.jp

Fluid-o-Tech Asia (Shanghai) Co., Ltd.
2/F, Factory building 6 (1), No. 258, Zhijiang Road,
Fengxian District, Shanghai City, Z.P.: 201499 China
Tel. +86 (021) 67100 838
Fax +86 (021) 67100 605
info@fluidotech-asia.com