CALL TOLL FREE 877-742-2878 FOR SALES AND SUPPORT

Return to BurtProcess.com

Isochem® GMC4

MAGNETICALLY DRIVEN SEALLESS GEAR PUMP

Pulsafeeder's Isochem® GMC4 Series is a compact magnetically driven sealless gear pump designed for safely handling highly corrosive, hazardous, explosive, or toxic chemicals and industrial applications. The GMC4 provides safe leak free service since the magnetic coupling eliminates the need for traditional shaft sealing methods such as mechanical seals and shaft packing which are the primary source of leakage in rotating shaft pumps. Furthermore, expensive seal flushing or lubrication systems are eliminated. Consequently, mean time between failures is maximized while maintenance and operation costs are minimized!

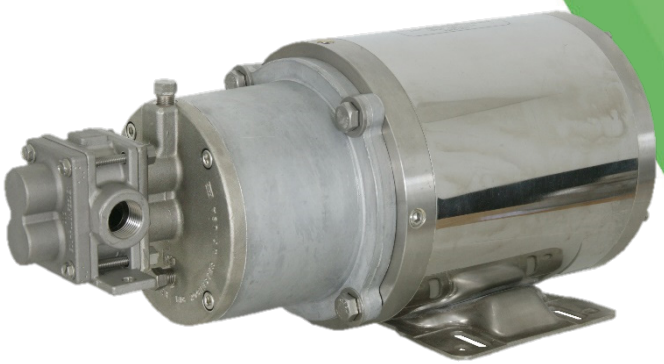

C ETL LISTED US
Intertek

Configurations available certified to UL 1389:2019 Ed 1, "Plant Oil Extraction Equipment for Installation and Use in Ordinary (Unclassified) Locations and Hazardous (Classified) Locations"

Operating Benefits

- Flows to 3.0 gpm (11.4 lpm)
- Pressures up to 200 psi (13.8 bar)
- Laminar, non-pulsating flow
- Compact, close-coupled foot print eliminates issues related to alignment between pump and motor
- Leak free service minimizes exposure of your personnel to hazardous chemicals
- Ideal for viscosities from less than 1 to 100,000 cPs
- Suitable for vacuum service
- Can be used for metering or transfer of expensive, hazardous and corrosive chemicals over the entire pH range

Key Features

- Neodymium (standard) or Samarium cobalt coaxial synchronous magnets
- High torque magnetic coupling minimizes possibility of decoupling
- Internal pressurized lubrication system
- Inline discharge and suction connections
- Sealless, leak free operation

Materials of Construction

- **Pump Housing:** 316, Alloy 20, Hastelloy-C
- **Gears:** 316, Alloy C, Alloy 20, Teflon®, PEEK, Carbon
- **Wear Plates**: Carbon, Teflon®, PEEK, Ceramic
- **Bearings:** Teflon®, Carbon (Grade 76), Carbon (Grade P90)
- **Containment Can:** Single or Double 316SS, Hastelloy-C
- **Magnets:** Neodymium or Samarium Cobalt
- **O-Ring Seal:** PTFE or 316SS spiral wound PFA encapsulated

Aftermarket & Accessory Offerings

- KOPkit®
- Cal Column
- Strainer
- Pressure Relief Valves
- Back Pressure Valves
- Gauges



PULSAFEEDER® ENGINEERED PRODUCTS

Isochem® GMC4

GENERAL SPECIFICATIONS

Curves shown represent Maximum Differential Pressure[1,3].
Contact your Pulsafeeder representative for more information on:
~ Operating up to 140 psi MDP[1,3] with optional narrow width gears
~ Operating at viscosities greater than 100 cPs

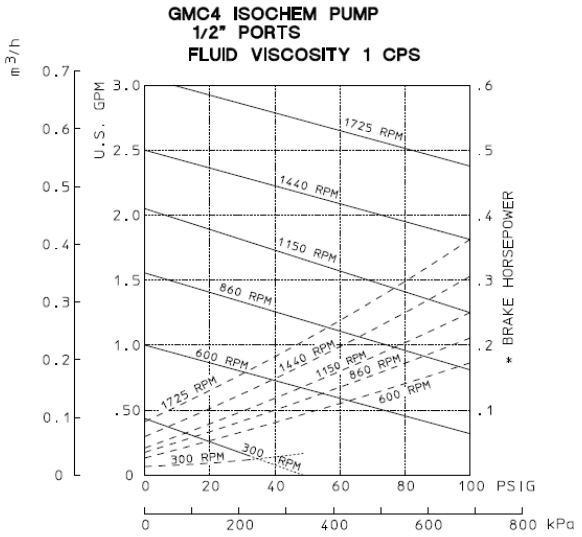

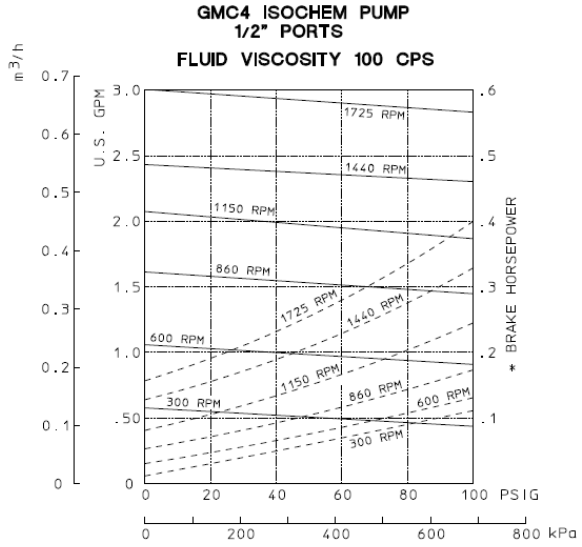

Port Size and Type	½" FNPT, BSPT, 150 lb. RF Flange
Direction of Rotation	Bi-directional
Theoretical Displacement	0.189 gal/100 rev. (7.15 cc/rev)
Maximum Differential Pressure (MDP)[1,3]	140 psi (6.9 bar)
Max. Diff. Pressure (MDP) [1,3] Plastic Gears	50 psi (3.4 bar)
Max. Allowable Working Pressure (MAWP)[2,3]	200 psig (13.8 bar)
MAWP[2,3] Plastic Gears	100 psig (6.9 bar)
Maximum Speed	1750 rpm
Maximum Capacity at 0 psig	3.0 gpm (11.4 lpm)
Maximum Viscosity	100,000 cPs
Maximum Process Fluid Temperature	450 F (232 C)
Minimum Process Fluid Temperature	-40 F (-40 C)
Fluid pH Range	0-14
Gear Type	Compact Spur Gear
Bearing Type	Sleeve
Magnetic Torque Rating	51.5 – 75.6 in-lbs.
Motor Frame Sizes – NEMA	56C, 143/45TC
Motor Frame Sizes – IEC	71, 80 B3 / B14 Flange
Weight, Less Motor	16 lbs. (35.3 kg)

1. MDP. Maximum differential pressures between inlet (suction) and outlet (discharge) ports
2. MAWP. Maximum allowable continuous outlet (discharge) pressure
3. Operating above MDP will require offsetting inlet (suction) pressure

GMC4 for 56C, 143/45TC motors. Reference only

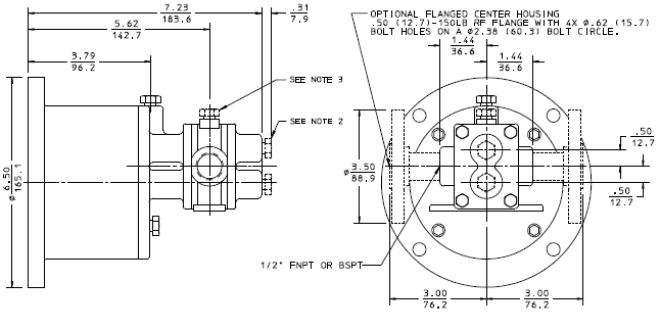

GMC4 for IEC 71C motor. Consult factory for 80C. Reference Only

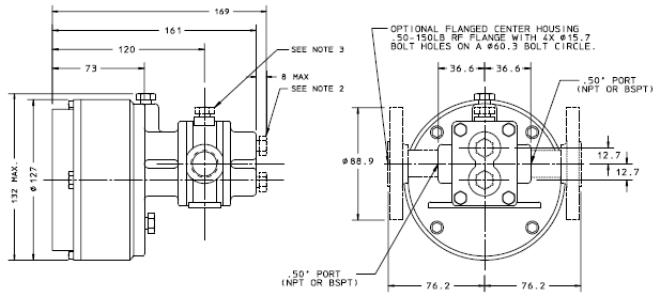

Pulsafeeder, Inc.
2883 Brighton Henrietta Town Line Rd. Rochester, NY 14623
Phone: +1 (585) 292-8000
pulsa@idexcorp.com • pulsa.com
Pulsafeeder is an ISO 9001 Certified Company.

© Copyright 2021 Pulsafeeder.