MARCH PUMPS

1819 PICKWICK AVE., GLENVIEW, IL 60026-1306, U.S.A
PHONE: (847) 729-5300 - FAX: (847) 729-7062
WWW.MARCHPUMP.COM

TE-10P-MD, TE-10K-MD

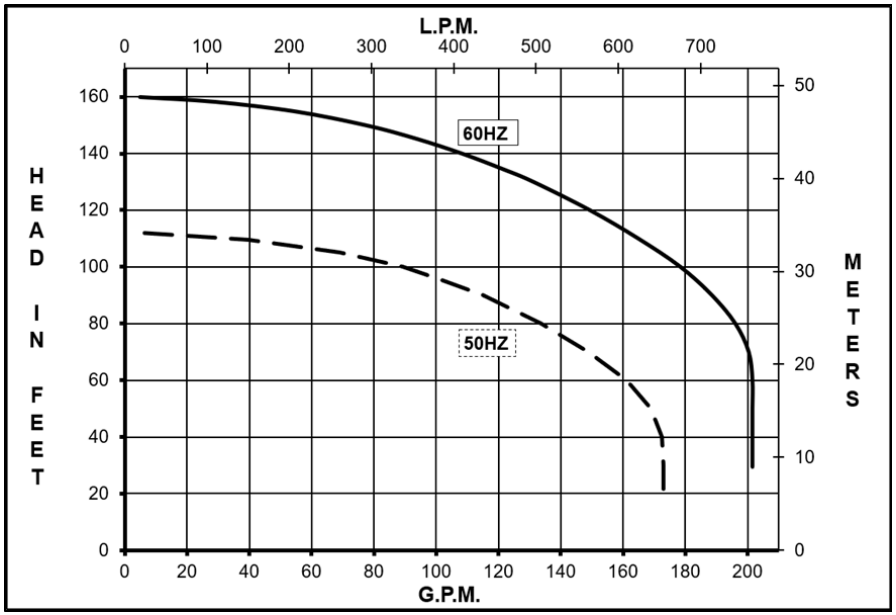

DESCRIPTION &OPERATION: Series 10 are centrifugal magnetic drive pumps, eliminating the need for a shaft seal. Pumps are serviceable with an adjustable wrench. Screws should be tightened in sequence & uniformly. Do not over tighten the screws or you may crush the plastic housing bosses. See the parts list for a breakdown of parts. Pumps are not self-priming, lack a suction lift, and thus require a **flooded suction**. Pumps **cannot be run dry** because the impeller requires the liquid being pumped for lubrication. The direction of motor rotation should be clockwise when facing the inlet of the pump. For liquids with a specific gravity greater than water, have a higher viscosity, or for elevated temperatures, a trimmed impeller may be necessary. For application assistance, contact March Pump.

ELECTRICAL: The motor is TEFC (Totally Enclosed Fan Cooled), U.L. listed, rated for continuous duty, and has a conduit box for electrical connections.

CAUTION IN ASSEMBLY & DISASSEMBLY: The magnetic coupling in the pump is strong enough to warrant caution. When servicing the pump, the attraction of the impeller magnet and drive magnet may pull the impeller from your grasp. When assembling, hold onto the outer diameter of the impeller vanes with both hands and gently engage the impeller into the magnet field. Hold the impeller firmly and resist the magnetic attraction as you slowly put the impeller back in. The magnetic forces are strongest between 1/3 to 2/3 of engagement and will diminish when the magnets become aligned. Do not allow the impeller to snap into the rear housing, doing so may result in damage. Exercise caution in placing any of the magnets near steel, tools, or other sensitive instruments as doing so may result in damage or personal injury. When attaching drive magnet to motor shaft, position the face of the drive magnet 3/16 inch above the face of the motor bracket.

Specifications		TE-10P-MD	TE-10K-MD	TE-10P-MD With Flanges	TE-10K-MD With Flanges
	3Ph	0161-0058-0100	0161-0016-0100	0161-0058-0170	0161-0016-0170
Inlet-Outlet		3”MPT x 2”MPT	3”MPT x 2”MPT	3”Flange x 2” Flange	3”Flange x 2” Flange
Max Internal Pressure		75PSI (517 kPa)	75PSI (517 kPa)	75PSI (517 kPa)	75PSI (517 kPa)
Max Liquid Temperature		190F (87C)	190F (87C)	150F (65C)	190F (87C)

	60Hz											50Hz											
	Max Flow		Max Head			Electrical						Max Flow		Max Head			Electrical						Packed Weight
Model	GPM	LPM	FT	PSI	M	Ph	V	A	HP	kW	RPM	GPM	LPM	Feet	PSI	M	Ph	V	A	HP	kW	RPM	Pounds
TE-10P-MD	200	757	160	69.4	48.8	3	230/460	23.2/11.6	10	7.46	3450	172.8	654	112	48.5	34.1	3	380	14.1	10	7.46	2850	255
TE-10K-MD	200	757	160	69.4	48.8	3	230/460	23.2/11.6	10	7.46	3450	172.8	654	112	48.5	34.1	3	380	14.1	10	7.46	2850	255
*The Threaded and Flange models have the same performance. The Flange Versions weigh 4 pounds more then the threaded.																							
All specifications & data are based on pumping water & are intended as a guideline only. Specifications may vary with different motors.																							

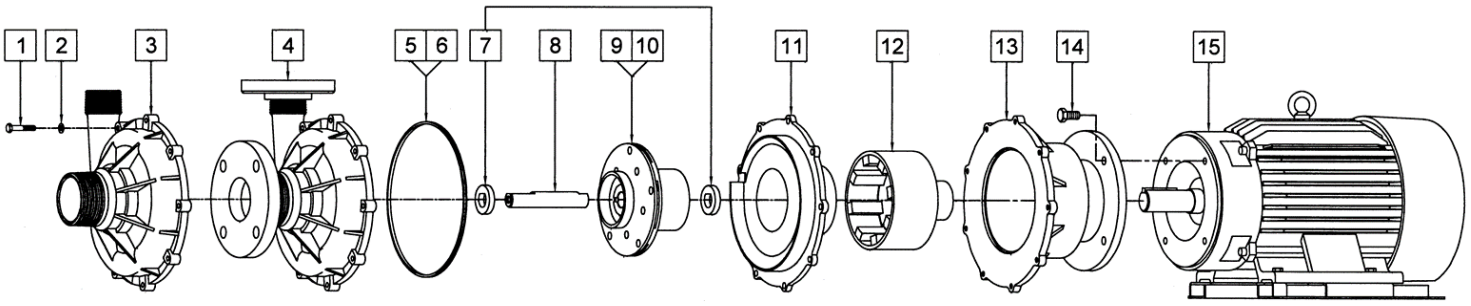

TE-10P-MD				TE-10K-MD			
Item	Part Number	QTY REQ	Description	Item	Part Number	QTY REQ	Description
1	0160-0029-1000	9	5/16”-18 x 1-3/4” Lg. Screw (Stainless)	1	0160-0029-1000	9	5/16”-18 x 1-3/4” Lg. Screw (Stainless)
2	0160-0030-1000	9	5/16”ID x 5/8” OD Washer (Stainless)	2	0160-0030-1000	9	5/16”ID x 5/8” OD Washer (Stainless)
3	0161-0056-1000	1	Front Housing (Polypropylene)	3	0161-0008-1000	1	Front Housing (Natural Kynar)
5	0161-0043-1000	1	9.750”ID x 10” OD Gasket (Viton)	5	0161-0043-1000	1	9.750”ID x 10” OD Gasket (Viton)
7	0161-0001-1000	2	Front & Rear Thrust Washer (Ceramic)	7	0161-0001-1000	2	Front & Rear Thrust Washer (Ceramic)
8	0161-0002-1000	1	Shaft (Ceramic)	8	0161-0002-1000	1	Shaft (Ceramic)
9	0161-0053-0300	1	Impeller with Carbon Bushings (Polypropylene)	9	0161-0005-0400	1	Impeller with Carbon Bushings (Glass Filled Kynar)
11	0161-0057-1000	1	Rear Housing (Polypropylene)	11	0161-0009-1000	1	Rear Housing (Natural Kynar)
12	0161-0031-0100	1	Drive Magnet	12	0161-0031-0100	1	Drive Magnet
13	0161-0007-0010	1	Motor Bracket	13	0161-0007-0010	1	Motor Bracket
14	0160-0031-1000	4	1/2”-13 x 1”Lg. Screw (Stainless)	14	0160-0031-1000	4	1/2”-13 x 1”Lg. Screw (Stainless)
15	0161-0012-1000	1	TEFC Motor, 10HP, 230/460V, 3 Phase, 50/60Hz	15	0161-0012-1000	1	TEFC Motor, 10HP, 230/460V, 3 Phase, 50/60Hz
W	0161-0060-0100	1	Wet End Kit (Items: 1,2,3,5,7,8,9,11)	W	0161-0035-0100	1	Wet End Kit (Items: 1,2,3,5,7,8,9,11)
TE-10P-MD With Flanges				**TE-10K-MD With Flanges**			
1	0160-0029-1000	9	5/16”-18 x 1-3/4” Lg. Screw (Stainless)	1	0160-0029-1000	9	5/16”-18 x 1-3/4” Lg. Screw (Stainless)
2	0160-0030-1000	9	5/16”ID x 5/8” OD Washer (Stainless)	2	0160-0030-1000	9	5/16”ID x 5/8” OD Washer (Stainless)
4	0161-0063-0100	1	Front Housing With Flanges (Polypropylene)	4	0161-0033-0100	1	Front Housing With Flanges (Natural Kynar)
5	0161-0043-1000	1	9.750”ID x 10” OD Gasket (Viton)	5	0161-0043-1000	1	9.750”ID x 10” OD Gasket (Viton)
7	0161-0001-1000	2	Front & Rear Thrust Washer (Ceramic)	7	0161-0001-1000	2	Front & Rear Thrust Washer (Ceramic)
8	0161-0002-1000	1	Shaft (Ceramic)	8	0161-0002-1000	1	Shaft (Ceramic)
9	0161-0053-0300	1	Impeller with Carbon Bushings (Polypropylene)	9	0161-0005-0400	1	Impeller with Carbon Bushings (Glass Filled Kynar)
11	0161-0057-1000	1	Rear Housing (Polypropylene)	11	0161-0009-1000	1	Rear Housing (Natural Kynar)
12	0161-0031-0100	1	Drive Magnet	12	0161-0031-0100	1	Drive Magnet
13	0161-0007-0010	1	Motor Bracket	13	0161-0007-0010	1	Motor Bracket
14	0160-0031-1000	4	1/2”-13 x 1”Lg. Screw (Stainless)	14	0160-0031-1000	4	1/2”-13 x 1”Lg. Screw (Stainless)
15	0161-0012-1000	1	TEFC Motor, 10HP, 230/460V, 3 Phase, 50/60Hz	15	0161-0012-1000	1	TEFC Motor, 10HP, 230/460V, 3 Phase, 50/60Hz

NOTE: Contact Factory for other materials and/or parts not listed. Special voltage motors are available upon special order.

Materials in contact with the liquid: **TE-10P-MD**: Polypropylene, Carbon, Viton, Ceramic
TE-10K-MD: Natural Kynar, Glass Filled Kynar, Carbon, Viton, Ceramic

LIMITED WARRANTY: March pumps are guaranteed only against defects in workmanship or materials for a period of one year from date of manufacture pumping water. For the complete warranty and to register online go to www.marchpump.com/warranty-registration