CALL TOLL FREE 877-742-2878 FOR SALES AND SUPPORT
Return to BurtProcess.com

MDX

1" x 1" Centrifugal Transportation Circulator

The MDX is a magnetically-driven sealless circulator that produces flows to 25 GPM and pressures to 20' TDH, 12 or 24V DC with an optional brushless DC motor.

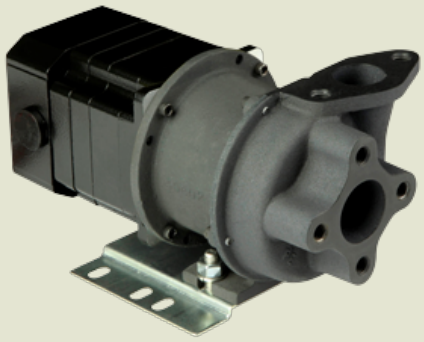

SPECIFICATIONS:

Materials Of Construction	Aluminum
Flow	Up to 25 GPM
Head Feet	Up to 20'
Impeller	2.5" semi-open stainless steel
Drive Options	Close coupled 12V DC, Close coupled 24V DC
Seal	Magnetically driven no mechanical seal required
Options	Adapters available to convert flanged connections to 1" female NPT, Optional mounting base is adjustable or removable
Temperature	Designed for operation in ambient temperture up to 200°F, Designed for use with fluids up to 220°F and sustained fluid temps up to 210°F
Base	(2) bolt integrated mounting foot cast into pump housing

Application

- Agricultural
- Commercial
- Industrial
- Marine
- OEM
- Transportation

Features

- Dual 18" long 14 AWG red (positive) black (negative) power leads
- Housing has 1" (4) bolt flanged suction & (2) bolt flanged discharge connections
- Motor enclosure is splash and weather resistant
- Motor has brushed or brushless configurations with sealed control electronics
- Thermally protected against overload and overtemp with automatic reset

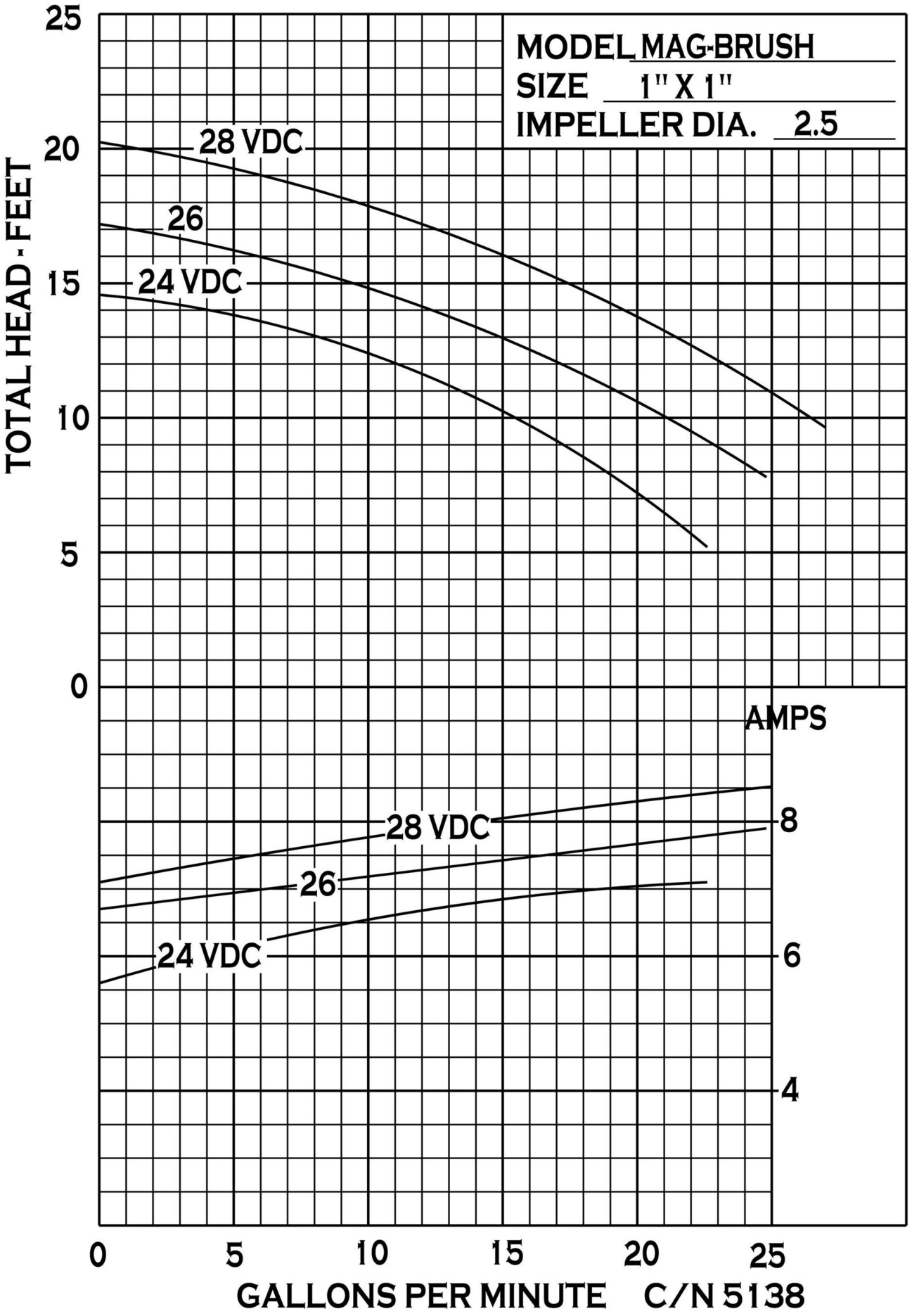

34800 BENNETT - FRASER, MI 48026-1686
(586) 293-8240 - FAX (586) 293-8469
(800) 563-8006 - www.mppumps.com

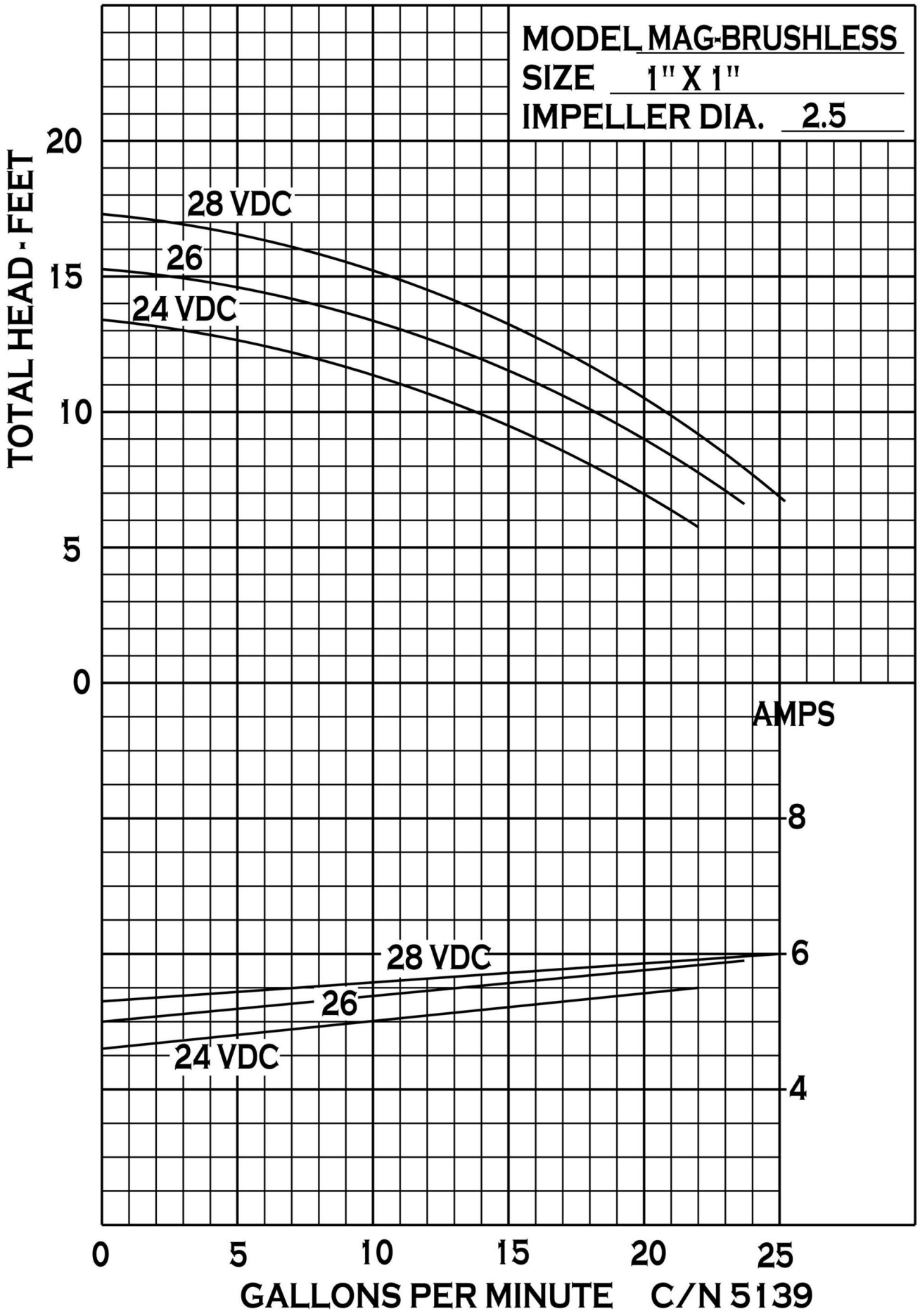

34800 BENNETT - FRASER, MI 48026-1686
(586) 293-8240 - FAX (586) 293-8469
(800) 563-8006 - www.mppumps.com

DRAWING NO
30939

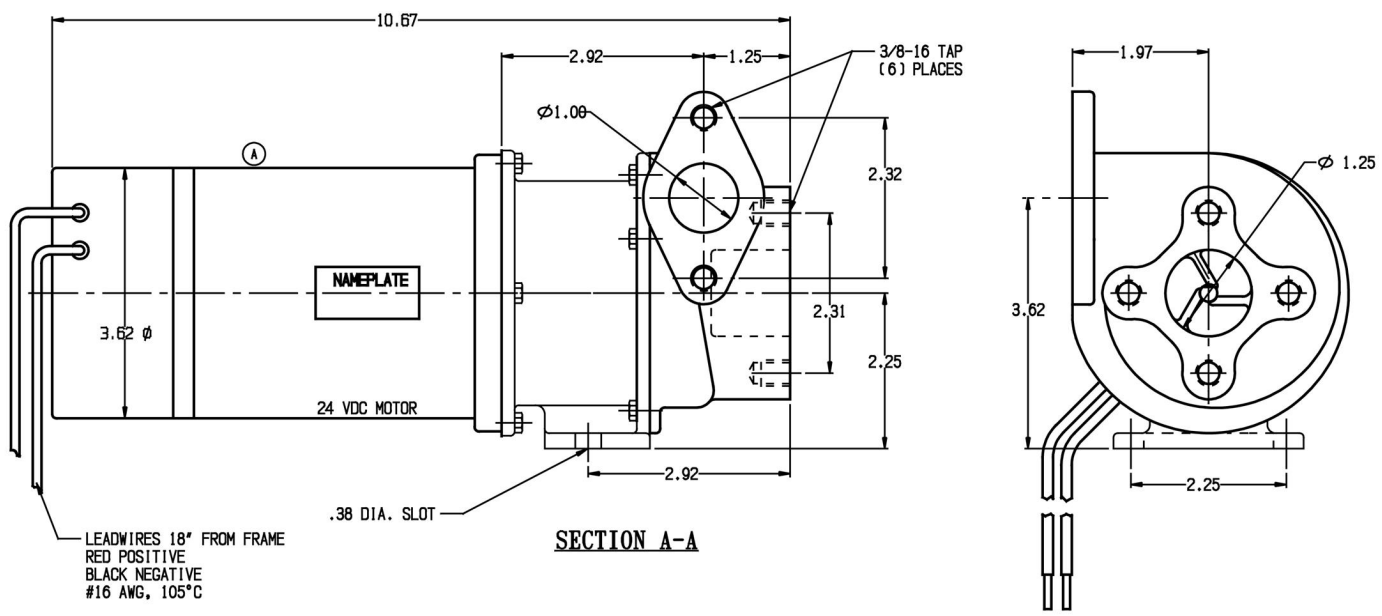

Magnetically Coupled Brushless DC Circulator Pump
Dimensions 10.7x5.0x4.0 inches
Weight 9 lbs.
Materials
356T-6 Aluminum housing and adapter
Carbon/stainless steel bearing system
Ceramic coupling magnets, 90 oz-in strength
Stainless steel impeller
Buna O-rings
Motor Characteristics
Electrically commutated using Hall effect sensors.
Capable of 32V dc maximum continuous power.
Thermally protected for overload or over temperature with automatic reset.
Enclosure is splash resistant. Control electronics are sealed.

G					UNLESS OTHERWISE NOTED THIRD ANGLE PROJECTION	MP PUMPS, INC. TECUMSEH PRODUCTS CO. FRASER, MICHIGAN 48026, U.S.A.	
F					2 PLACE DIM ± .020		
E					3 PLACE DIM ± .010		
D					ANGULAR DIM ± 1°	MATERIAL	
C					DO NOT SCALE	DR. C.W. / DATE 12-2-97 / AP D.D. / SCALE FULL / MADE FOR / MADE FROM NUMBER	
B							
A	WAS MAC MOTOR MANUFACT.	C.W.	10-24-02	D.D.	NAME	CIR. - PUMP - MAG.	DRAWING NO. 30939
	ECN #7241 IN		DATE	EN			

DRAWING NO
30011

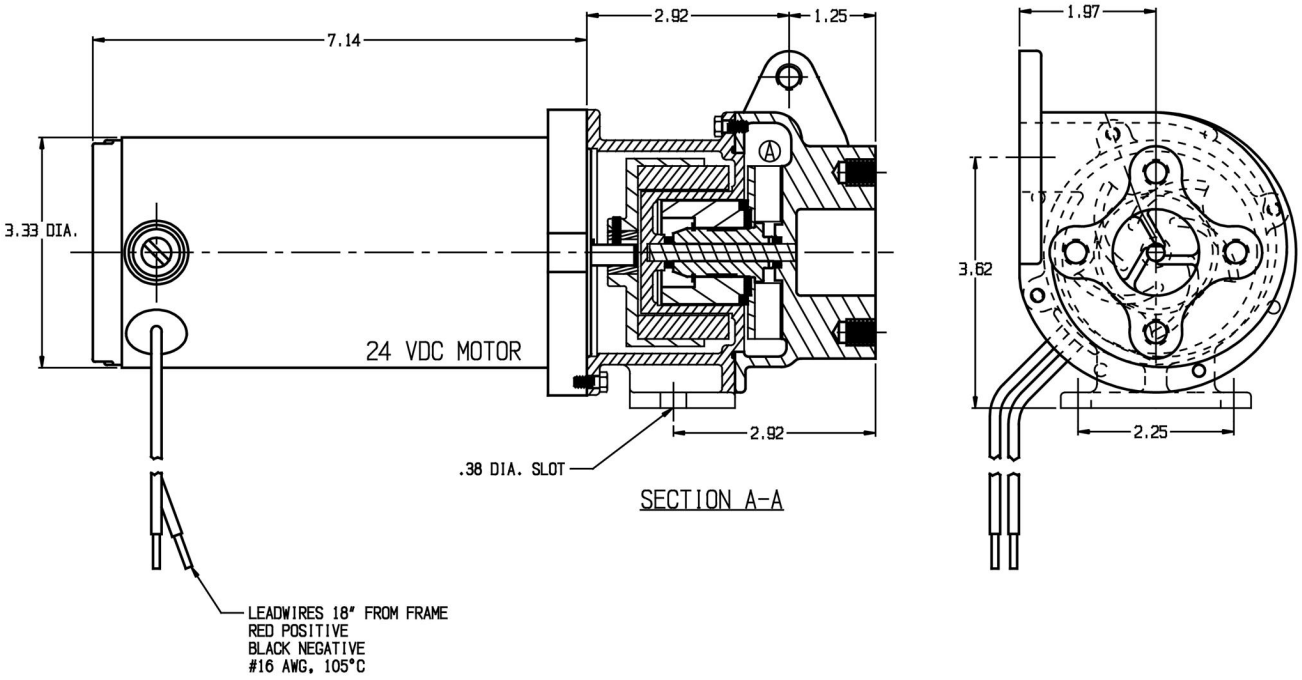

G				UNLESS OTHERWISE NOTED THIRD ANGLE PROJECTION 2 PLACE DIM ± .020 3 PLACE DIM ± .010 ANGULAR DIM ± 1/2°	MP PUMPS, INC. TECUMSEH PRODUCTS CO. FRASER, MICHIGAN 48026, U.S.A.
F					MATERIAL
E					
D					
C				DO NOT SCALE	DR K.G. / DATE 4-29-97 / AP D.D. / SCALE FULL / MADE FOR / MADE FROM
B					NAME: CIR. - PUMP - MAG.
A	WET ROTOR CHANGED. ECN480	DR IN	6/15/99 DATE	DD EN	DRAWING NO. 30011

30011

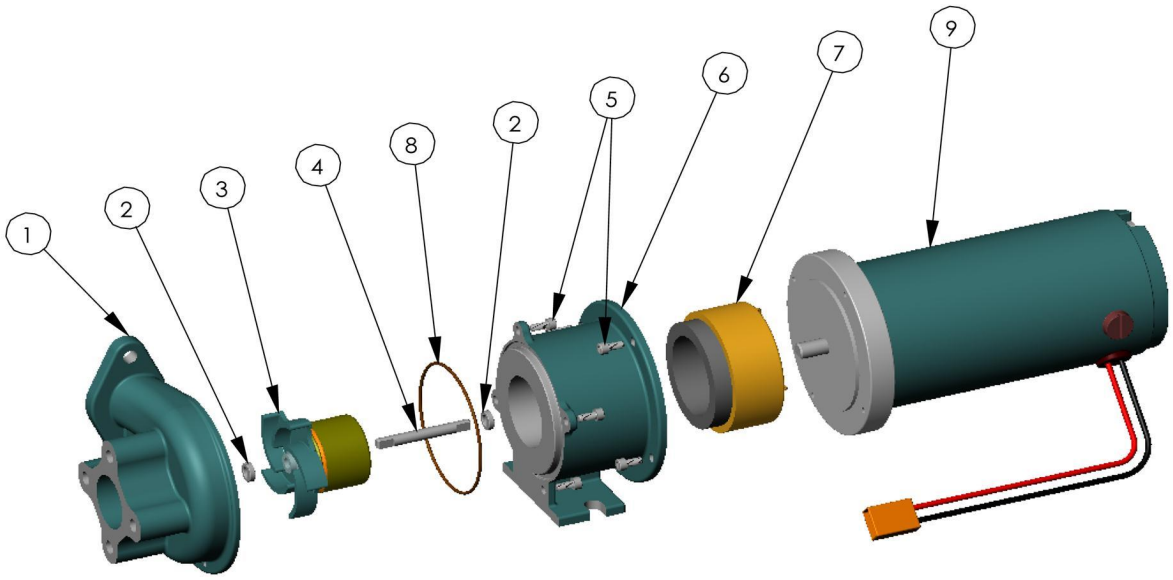

PART NO.	ITEM NO.	DESCRIPTION	QTY.		PART NO.	ITEM NO.	DESCRIPTION	QTY.
30605	1	HOUSING	1		30603	6	HOUSING	1
33445	2	WASHER S.S.	2		30769	7	DRIVE MAGNET	1
34826	3	ROTOR ASSEMBLY	1	*	30622	8	O - RING BUNA	1
33446	4	SHAFT S.S.	1		30270	9	ELECTRIC MOTOR 24 VDC	1
30297	5	CAPSCREW STL. 8-32 X 3/8 LG.	8					

*

*- RECOMMENDED REPLACEMENT PARTS

34800 BENNETT - FRASER, MI 48026-1686
(586) 293-8240 - FAX (586) 293-8469
(800) 563-8006 - www.mppumps.com

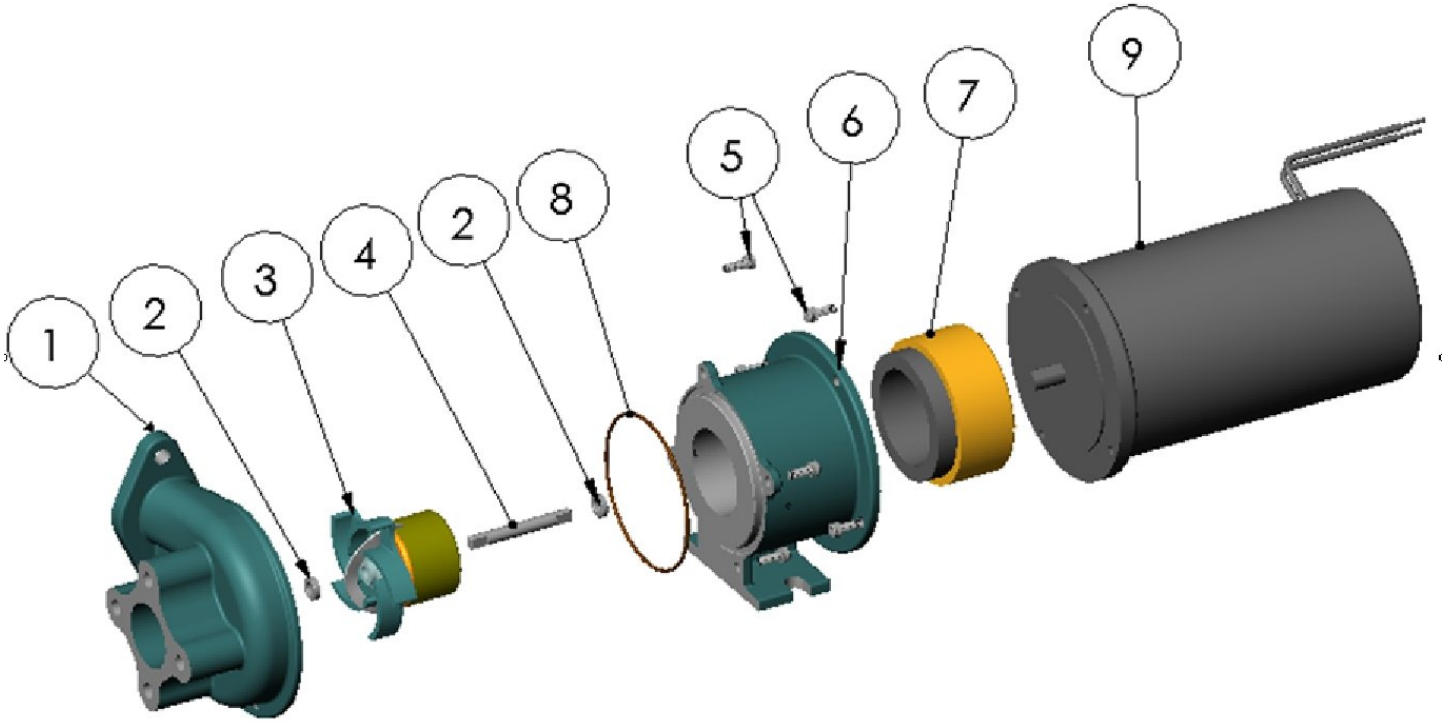

PART NO.	ITEM NO.	DESCRIPTION	QTY.		PART NO.	ITEM NO.	DESCRIPTION	QTY.
30605	1	HOUSING	1		30603	6	ADAPTER	1
33445	2	WASHER S.S.	2		30769	7	DRIVE MAGNET	1
34826	3	ROTOR ASSEMBLY	1	*	30622	8	O - RING VITON	1
33446	4	SHAFT S.S.	1		30938	9	ELECTRIC MOTOR 24 VDC	1
30297	5	CAPSCREW STL. 8-32 X 3/8 LG.	8					

34800 BENNETT - FRASER, MI 48026-1686
(586) 293-8240 - FAX (586) 293-8469
(800) 563-8006 - www.mppumps.com