the operating pressure has been less than 1 bar below the relief valve setting.
- Normal wear and tear is not covered by the present warranty

The adjustment or replacement of defective parts made under this warranty will not extend the original warranty period.

CERTIFICATIONS

NSF listed pumps available for drinkable liquids. For the model details, please refer to the official NSF website (direct link available on www.fluidotech.it)
The pump itself, without the motor, is not to be considered as a machine, but only a component, therefore the mark "CE" is not applicable.
When the pump is assembled with a motor, the complete pump-motor unit is instead considered as a machine and supplied with the mark "CE". Please refer to Fluid-o-Tech declaration of conformity, which may be requested to state the essential compliances with the Directives.

STANDARD MAINTENANCE

Maintenance and replacement of parts subject to wear on Fluid-o-Tech magnet drive gear pumps should only be done by a technician certified by Fluid-o-Tech. Periodic cleaning of the hydraulic circuit and filters is advisable in order to avoid cavitation and premature wear of the internal components.

** Dedicated configurations are available if the operating outlet pressure is in between 10bar/145psi and 15bar/217psi. In case of higher outlet pressure, 15bar/217psi to 20bar/290psi, please consult the factory.*

MG-MK-MS AND PG MANUAL en - 01/2020 Ed.

Fluid-o-Tech reserves the right to alter the specifications indicated in this catalogue at any time and without prior notice.

Fluid-o-Tech srl
Via Leonardo da Vinci, 40
20094 Corsico, Milano, Italy
Tel. +39 02 9995 01
Fax +39 02 9995 0999
info@fluidotech.it

Fluid-o-Tech Int'l Inc.
161 Atwater St.,
Plantsville CT (USA) 06479
Tel. +1 (860) 276 9270
Fax +1 (860) 620 0193
info@fluid-o-tech.com

Fluid-o-Tech Int'l Inc. Japan
2nd Floor, 4-3-8, Espoir Todoroki,
Todoroki, Setagaya, Tokyo 158-0082
Tel. +81 (0) (3) 6432 1812
Fax +81 (0) (3) 6432 1813
erkkato@fluidotech.jp

Fluid-o-Tech Asia (Shanghai) Co., Ltd.
2/F, Factory building 6 (1), No. 258, Zhijiang Road,
Fengxian District, Shanghai City, Z.P.: 201499 China
Tel. +86 (021) 67100 838
Fax +86 (021) 67100 605
info@fluidotech-asia.com

Fluid-o-Tech
POWER THE FLOW

CALL TOLL FREE 877-742-2878 FOR SALES AND SUPPORT
Return to BurtProcess.com

INSTRUCTION MANUAL

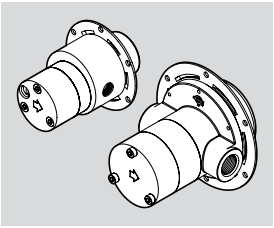

MAGNET DRIVE GEAR PUMPS
MG, MK, MS AND PG SERIES

INSTALLATION

The pump should be installed exclusively by authorized staff. Handle with care.

WARNINGS



- *The flange must be handled with care and should not be grasped with tongs or vices, since this could cause misalignment of the magnets and damage of the pump.*
- ***For food applications the pumps (even when NSF listed) need to be sanitized by circulating water at 80°C/ 176°F for at least 20 minutes.***
- ***The magnetic coupling does not guarantee a defined value of the discharge pressure. Should it be necessary to protect the hydraulic circuit from any possible fluid hammers generated by the pump, it is vital using a pump, equipped with a bypass or a safety valve to be installed after the pump itself.***
- *The water used for this operation must not be reused, either during the sterilization or later, but must be discharged.*
- *In order to avoid any accidental ingress of solid matter which might damage the internal components of the pump, it is recommended removing the two protection caps placed on the inlet and outlet ports of the pump only immediately before mounting the fittings and the pipework.*
- *If continuous operation is required, the pump should be mounted in a well ventilated environment in order to dissipate the heat produced by the motor.*
- *To avoid vibrations of mechanical parts and noise, it is advisable to mount the motor with rubber shock-absorbing supports.*
- *Particular care must be taken when connecting the pump with fittings in order to avoid leaks.*
- *If a sealing fluid or Teflon tape is used, do not allow any to enter the pump.*
- *It is advisable to use stainless steel or plastic fittings.*
- *When substituting just the pump-head, it is necessary to ensure that the model number of the new pump is identical to the pump to be changed. Exchanging the pump for a model of different capacity may damage the system, the motor and the pump itself.*
- *The hydraulic circuit should be carefully flushed before starting the pump.*
- *For pumps equipped with relief valve the thread on the fittings must not exceed 5 mm. Failure to observe such warning will result on damage to the relief valve spring.*

WIRING THE MOTOR TO THE POWER SUPPLY

- The power supply must be consistent with the electrical data stamped on the motor plate, with particular regard to voltage, frequency and current.
- The power must be switched off during installation.

MOTOR SELECTION

When the motor is not supplied with the pump it is necessary to verify that the motor dimensions and specifications are in line with Fluid-o-Tech recommendations.

Fluid-o-Tech gear pumps need a motor running at a speed between 800 and 5000 rpm. The flow rate is proportional to the motor speed. The continuos max torque must be lower than 0.1 Nm with ferrite-ferrite magnet coupling. Higher torque can be attained with other types of magnets.

ASSEMBLING THE MAGNET ONTO THE MOTOR SHAFT

Motors with flat shaft ("D" TYPE)

1 Tighten the set screw in its seat in the magnet holder until it protrudes from the bore of the brass

insert in order to verify that there are no imperfections in the thread which might stop the set screw before it is able to block the magnet on the rotor shaft.

2 Loosen the set screw until it no longer protrudes into the bore where the shaft will be inserted.

3 Place the magnet on the tool AT152 with the bore where the set screw sits in correspondence with the flat surface of the "D" pin (fig. 1).

4 Tighten the set screw until it touches the pin, but do not tighten so much as to make the extraction of the magnet difficult. The pin should not be scratched by the set screw when extracting the shaft.

5 Remove the magnet and place it on the motor shaft. In this way the set screw, protruding slightly from the internal diameter of the bore in the brass bushing, prevents incorrect orientation of the magnet during assembly onto the motor shaft.

6 Place the unit vertically on tool AT 152/1 with the magnet facing downwards in order to set the magnet in the correct position (see fig. 2).
Tighten the set screw with a max. torque of 1.5 Nm.

Motors with shaft key seat and MGAS/MGAF series driving magnets

1 Tighten the set screw in its seat in the magnet holder until it protrudes from the bore of the brass insert in order to verify that there are no imperfections in the thread which might stop the set screw before it is able to block the magnet on the rotor shaft.

2 Loosen the set screw until it no longer protrudes into the bore where the shaft will be inserted.

3 Ensure the shaft key is removed from its seat on the motor shaft.

4 Place the unit vertically on tool AT 152/1 with the magnet facing downwards in order to set the magnet in the correct position (see fig. 3). Tighten the set screw with a max. torque of 1.5 Nm.

NOTE: *For dimensions of tool AT 152/1 refer to table 1.*

Fig. 1

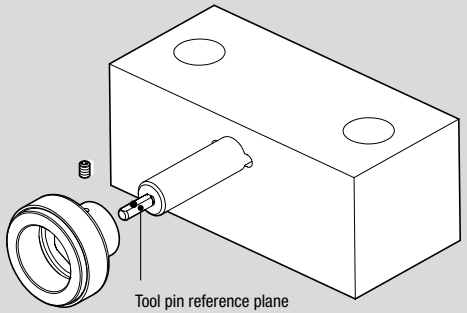

Fig. 2 - MGAF series driving magnets with "D" shaft

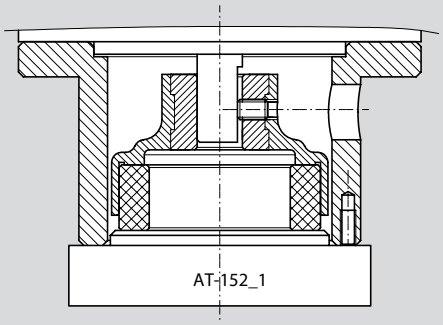

Fig. 3 - MGAF series driving magnets with shaft key seat

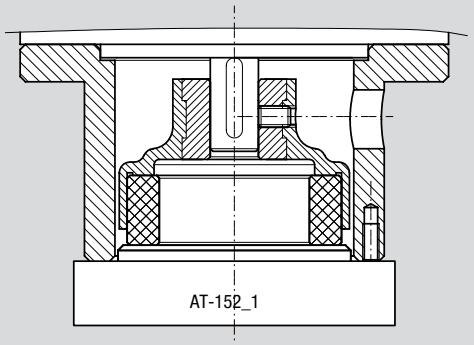

Tab. 1: Tool AT-152_..

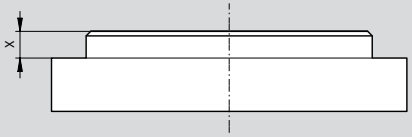

Tool AT-152_.. options (depending on pump series and magnet type)

Pump series	MG/MS		MK	
Magnet type	MGAF	MGAS	MKAF	MKAS
"X" dimension (in mm)	3	3	3	6
Tool type	AT-152_1		AT-152_2	AT-152_8

OPERATING CONDITIONS

Ensure that the pump materials are compatible with the pumped fluid. Fluid-o-Tech pumps are designed to handle clean water at ambient temperature.
Any other fluid and/or operating condition need to be tested and approved by the customer and verified by Fluid-o-Tech. The maximum liquid temperature is 120 °C (248 °F). It is strongly recommended, especially for the inlet, using a pipe with an inner diameter sufficient to handle the pump's capacity. This will avoid cavitation and consequent failure of the pump. The discharge pressure must not exceed 20bar/290psi in any event.
The piping on the discharge side should therefore be able to handle a pressure of 20 bar (290 psi).*
It is also recommended installing a filter before the pump capable of keeping out particles larger than 10 µm which could cause fast wear of the internal components, and with a surface area large enough not to cause hydraulic losses in the circuit. It is also important to check periodically the filter cartridge. In order to keep the filter under control, it is advisable to install a vacuum gauge after the filter. In case the vacuum increases more than 0.1 bar, the cartridge should be cleaned or changed.
For long pump life, the pumped fluid must not contain solid particles. Although the magnet drive gear pumps are self-priming, they should operate under wetted conditions, as dry running will cause accelerated wear of the internal components. A dirty filter or an insufficient supply of water can cause cavitation and accelerated wear of the internal components of the pump.
If the suction line is subject to low pressure or flow it is recommended fitting a pressure/level switch before the pump in order to switch the motor off when that happens. It is also recommended to protect the system from accidental overpressure with safety devices such as a pressure relief valve or a pressure switch connected to the motor. It is not advisable to install solenoid valves in the circuit; however, if necessary, the soleinoid valve should only be installed after the pump. Solenoid valves installed before the pump should be avoided at all times.
The internal diameter should be appropriately sized for the pump capacity. In order to avoid pressure spikes the solenoid valve should only be operated after the pump has stopped, allowing a few seconds to go by after the motor has been switched off. If the pump is equipped with a relief valve (bypass), the valve will act, in case of accidental overpressure, to limit the pressure, by means or recirculatinf the fluid internally.

The relief valve is **not** a flow regulator, and should not be used as such. If used as a flow regulator, the excess fluid will recirculate within the pump, through the relief valve, and the pump may fail.

The maximum differential pressure should be at least 1 bar (14.5 psi) lower than the relief valve setting in order to avoid fluid recirculation and therefore loss of capacity and ultimately failure.

Due to magnetic coupling, the pump does not require a mechanical seal to prevent leakage. This eliminates the usual problems associated with the use of a mechanical seal. The maximun pressure varies with pump model and speed. As the differential pressure deacreses the flow rate will increase.
Beyond the values specified in the charts on page 4 of this leaflet where the performances outside the grey area are attained with the rare earths magnet, the torque that can be transmitted is limited by the magnet strenght, and the coupling between the motor and the pump is not guaranteed, therefore the pump might stop. The coupling can be re-established simply by switching off the motor, waiting until it is completely stopped, and then restarting the motor again.

WARRANTY

Every new pump manufactured by Fluid-o-Tech is guaranteed to be free of defects in workmanship and material when leaving the factory for a period of 18 months from the production date printed on pump label, plus a period of 6 months to cover the warehouse and transit time, or for a period of maximum 24 months from the purchasing date to the first product use. In no event shall this period exceed 24 months from date of original invoice.
Fluid-o-Tech will repair or replace at our discretion part or all of the product not conforming to this warranty. Fluid-o-Tech's responsibility under this warranty is limited to the repair or replacement of defective product returned to us on an DDP basis, providing that our analysis discloses that such part or parts were defective at the time of sale.
The warranty is not recognized if:

- The instructions on how to handle, install or operate the pump are disregarded.
- The pump has been disassembled or modified by anyone other than a Fluid-o-Tech (or authorized by Fluid-o-Tech) engineer or repaired with non original components.
- The pump gas been operated dry, under cavitation.
- Solid extraneous particles are found in the pump.
- Obvious signs of excess pressure are evident.
- The pump has been utilized for an application for which it was not intended to be used where the operating conditions and/or the pumped liquid were incompatible with the pump itself and this application has not been specifically approved by Fluid-o-Tech.
- In case of pumps equipped with a relief valve, when