Magnet drive gear pump-motor units MGCF03S/MGCF07S/MGCF28S series

The compact precision performance pumps MG or PG series are designed to fit high technology applications.
The magnet drive principle provides a totally sealed pump chamber which is capable of handling a wide range of corrosive fluids with a high degree of safety.
The pump housing is available in AISI 303, AISI 316L, SAF 2205 or PPS. In operation the MG or PG series pumps are noiseless, pulsation-free and capable of handling relatively high temperature liquids up to 120 °C (248 F).
The coupling with the MGCF03S, MGCF07S and MGCF28S units designed for heavy duty, provides a reliable and noiseless operation in a compact size package.
The pole-to-pole alignment of the two magnets provides the driving motion to the pump. Decoupling will occur when the pump load exceeds the maximum coupling torque provided by the alignment of the two magnets.



MAIN APPLICATIONS

- Medical and surgical equipment
- Hemodialysis apparatus
- Laser apparatus
- Lubrication
- Ink-jet printing systems
- Cooling systems
- Laboratory instrumentation
- Water treatment
- Sampling
- Food processing equipment
- Sanitization

MGCF03S-MGCF28S

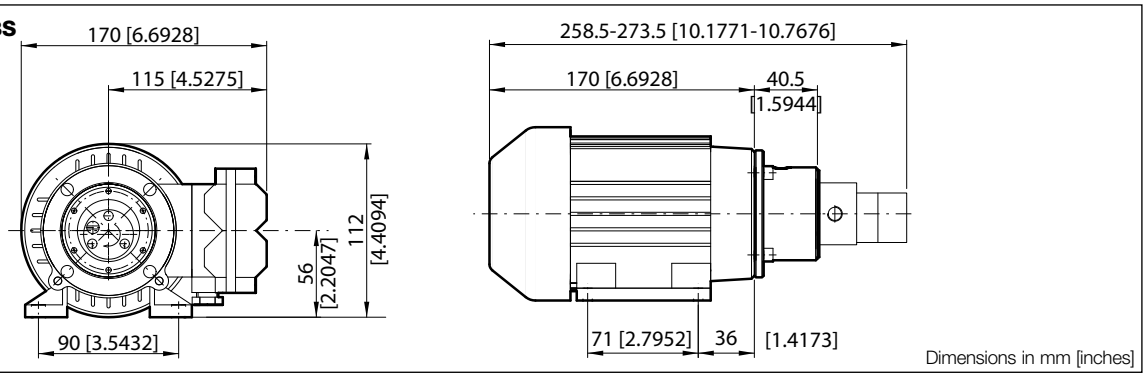

Dimensions in mm [inches]

MGCF07S

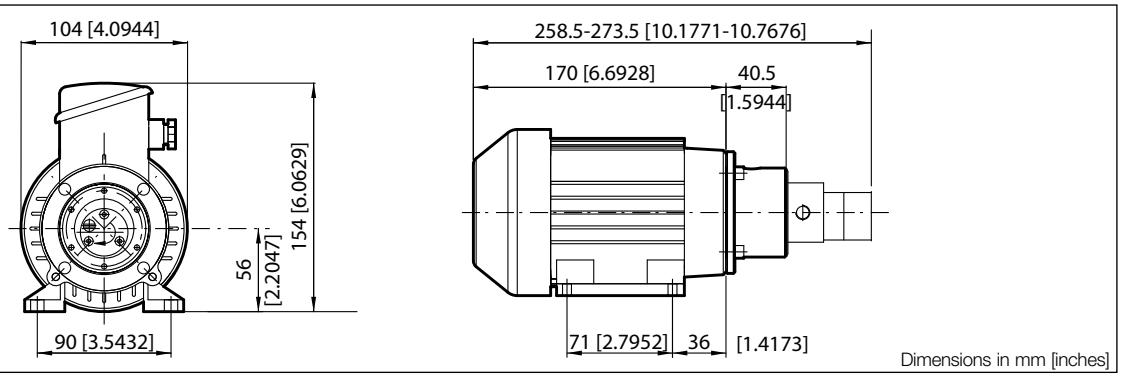

Dimensions in mm [inches]

POS	DESCRIPTION	FEATURES	CODE
A	Ferrite driving magnet	For 9 mm bore	MGAF09S
A+B	Complete adapter	For M56B14 motor	MGBF56S
A+B+C	Complete motor assembly	See table below	MGCF03S MGCF07S MGCF28S

DRIVING UNIT	MGCF03S	MGCF07S	MGCF28S
Voltage (V)	230 AC Single Phase	230/400 AC Three Phase	110 AC Single Phase
Frequency (Hz)	50	50	60
Poles	2	2	2
Rated speed (rpm)	2610	2780	3550
Current consumption (A)	1.1	0.42	1.27
Output power (W)	110	130	110
Operation	Continuous	Continuous	Continuous
Weight (Kg)	3.3	3.3	3.5

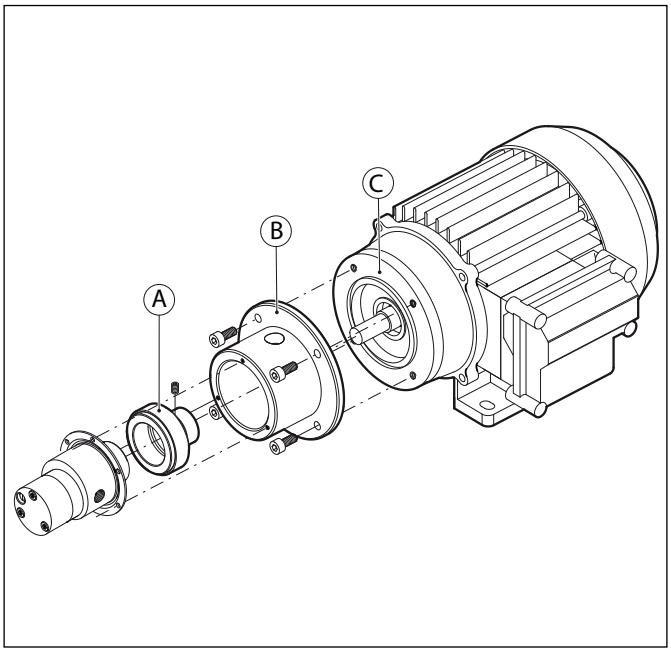

MGCF03S-MGCF07S (50 Hz)

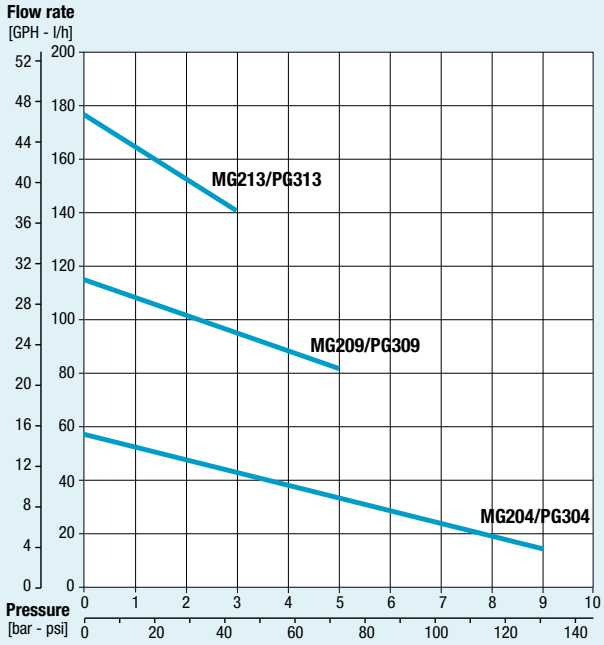

MGCF28S (60 Hz)

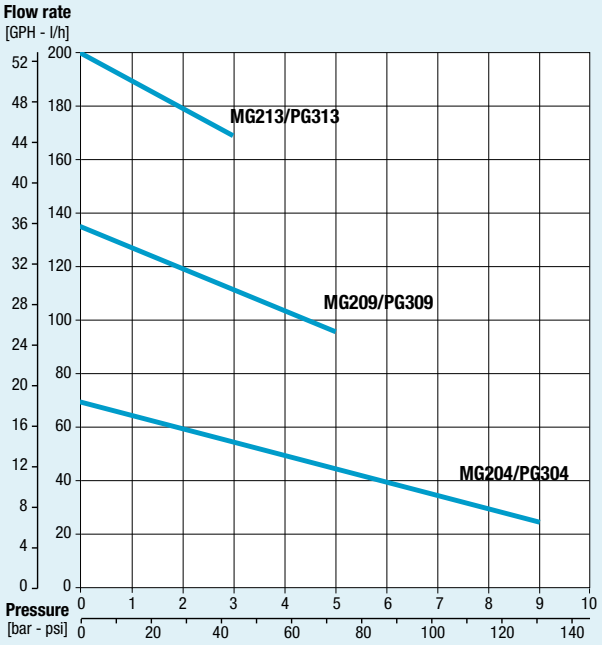

Note: Characteristics with water at 20 °C (68 F) and without relief valve. Fluids different from water must be validated by the Customer. Temperature requirements different from ambient temperature must be mentioned on the order. Different materials are available upon request. Use a filter before the pump inlet no larger than 10 micron

Fluid-o-Tech reserves the right to alter the specifications indicated in this catalogue at any time and without prior notice.

Fluid-o-Tech srl
Via Leonardo da Vinci, 40
20094 Corsico, Milano, Italy
Tel. +39 02 9995 01
Fax +39 02 9995 0999
info@fluidotech.it

Fluid-o-Tech Int'l Inc.
161 Atwater St.,
06479 Plantsville CT (USA)
Tel. +1 (860) 276 9270
Fax +1 (860) 620 0193
info@fluid-o-tech.com

Fluid-o-Tech Int'l Inc. Japan
2nd Floor, 4-3-8, Espoir Todoroki,
Todoroki, Setagaya, Tokyo 158-0082
Tel. +81 (0) (3) 6432 1812
Fax +81 (0) (3) 6432 1813
erkkato@fluidotech.jp

Fluid-o-Tech Asia (Shanghai) Co., Ltd.
2/F, Factory building 6 (1), No. 258, Zhijiang Road,
Fengxian District, Shanghai City, Z.P.: 201499 China
Tel. +86 (021) 67100 838
Fax +86 (021) 67100 605
info@fluidotech-asia.com