CALL TOLL FREE 877-742-2878 FOR SALES AND SUPPORT
Return to BurtProcess.com

Magnet drive gear pump-motor units MKCS08S/MKCS11S series

The MK series pumps are designed to complete the existing MG series with improved performances in terms of flow rate, pressure, capability to handle high viscosity fluids and a wider offer of materials to suit most applications, from the food to the industrial and chemical markets. The housing of the pump and the internal metal parts are available in AISI 303, AISI 316L or SAF 2205. The rare earths driving magnet is capable to drive the pump at high pressure.
The quality of the materials of the assembled components allows handling of fluids with temperatures up to 120 °C (248 F).
The coupling with the MKCS08S-MKCS11S units designed for heavy duty, provides a reliable and noiseless operation in a compact size package. The pole-to-pole alignment of the two magnets provides the driving motion to the pump.
Decoupling will occur when the pumpload exceeds the maximum coupling torque provided by the alignment of the two magnets.

Available upon request:
- Ferrite driving magnet



MAIN APPLICATIONS

- Medical and surgical equipment
- Hemodialysis apparatus
- Laser apparatus
- Lubrication
- Ink-jet printing systems
- Cooling systems
- Laboratory instrumentation
- Water purification and ultra-filtration
- Sampling
- Food processing equipment

MKCS08S

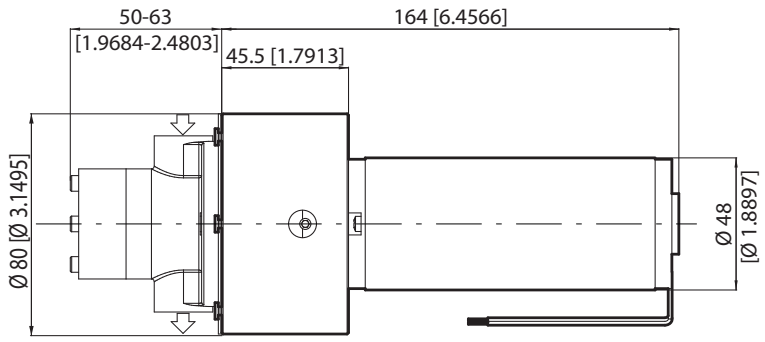

Dimensions in mm [inches]

MKCS11S

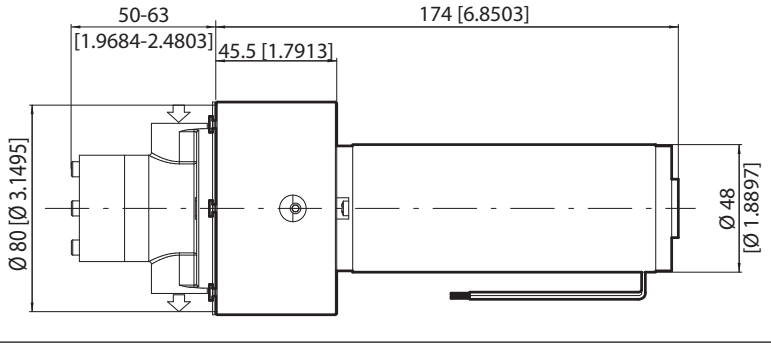

Dimensions in mm [inches]

POS	DESCRIPTION	FEATURES	CODE
A	Driving magnet	For 5 mm bore	MKAS05S
A+B	Complete adapter	For KAG M48x50 For KAG M48x60	MKBS48S
A+B+C	Complete motor assembly	See table below	MKCS08S MKCS11S

DRIVING UNIT	MKCS08S	MKCS11S
Voltage (V)	12 DC	24 DC
Rated speed (rpm)	3050	3150
Current consumption (A)	3.4	2.6
Output power (W)	32	49,5
Motor IP protection	IP40	IP40
Weight (Kg)	1.2	1.3

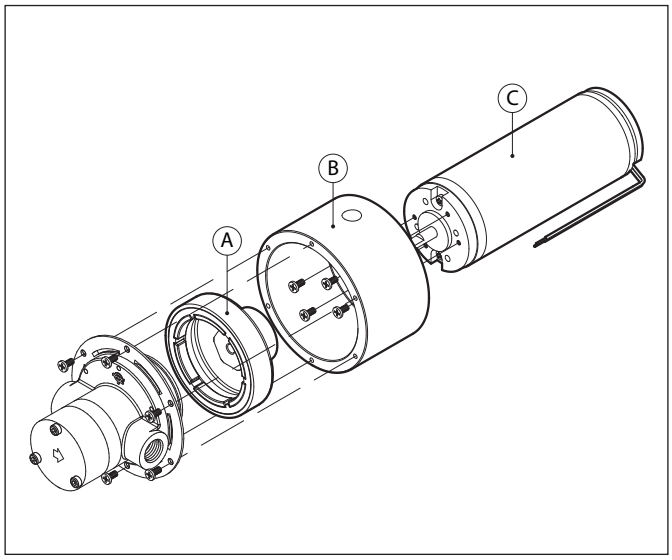

MKCS08S

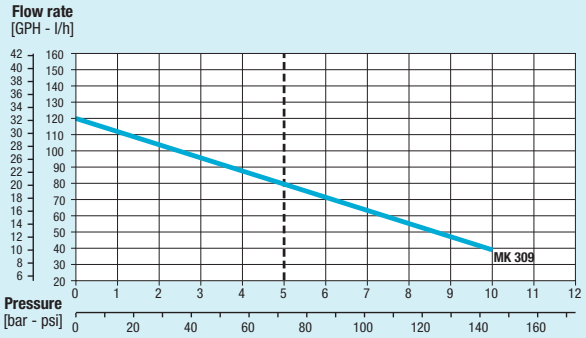

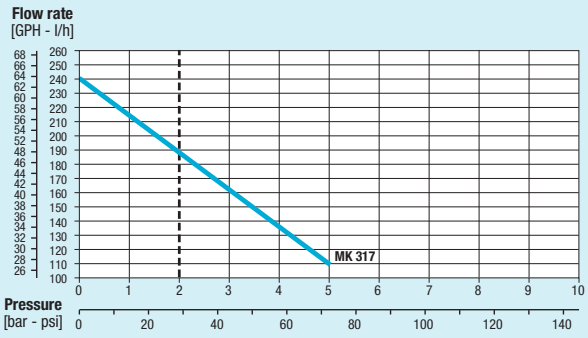

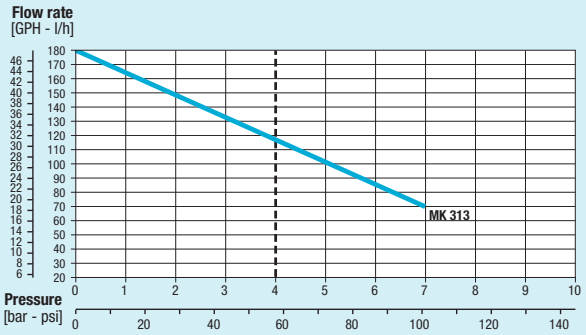

MKCS11S

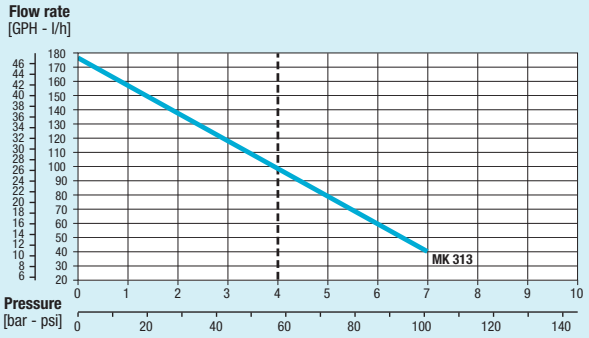

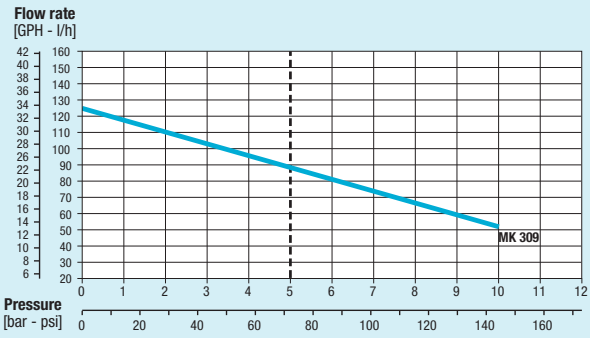

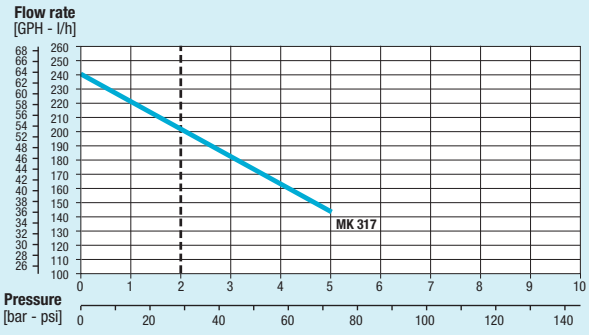

Note: Characteristics with water at 20 °C (68 F) and without relief valve. Fluids different from water must be validated by the Customer. Temperature requirements different from ambient temperature must be mentioned on the order. Different materials are available upon request. Use a filter before the pump inlet no larger than 10 micron

Fluid-o-Tech reserves the right to alter the specifications indicated in this catalogue at any time and without prior notice.

Fluid-o-Tech srl
Via Leonardo da Vinci, 40
20094 Corsico, Milano, Italy
Tel. +39 02 9995 01
Fax +39 02 9995 0999
info@fluidotech.it

Fluid-o-Tech Int'l Inc.
161 Atwater St.,
06479 Plantsville CT (USA)
Tel. +1 (860) 276 9270
Fax +1 (860) 620 0193
info@fluid-o-tech.com

Fluid-o-Tech Int'l Inc. Japan
201, 4-3-10, Todoroki,
Setagaya, Tokyo 158-082, Japan
Tel. +81 (0) (3) 6432 1812
Fax +81 (0) (3) 6432 1813
erkkato@fluidotech.jp

Fluid-o-Tech Asia (Shanghai) Co., Ltd.
2/F, Factory building 6 (1), No. 258, Zhijiang Road,
Fengxian District, Shanghai City, Z.P.: 201499 China
Tel. +86 (021) 67100 838
Fax +86 (021) 67100 605
info@fluidotech-asia.com