SANDPIPER®
A WARREN RUPP PUMP BRAND

II 2 G Ex h IIC T5...225°C (T2) Gb
II 2 D Ex h IIIC T100°C...T200°C Db

SERVICE AND OPERATING MANUAL
Models MSB2 and MSB2-B
Ball Valve
Type 3
Mine/Construction Duty

Table of Contents

Principle of Operation 1
Installation and Start-Up 1
Air Supply 1
Air Inlet & Priming 2
Air Valve Lubrication 2
ESADS+Plus®: Externally Serviceable Air Distribution System 2
Air Exhaust 3
Between Uses 3
Check Valve Servicing 3
Diaphragm Servicing 3
Reassembly 4
Pilot Valve 4
Pilot Valve Actuator 4
Service Instructions: Troubleshooting 4-5
Warranty 5
Installation 6
Material Codes 7
Composite Repair Parts List 8-9
Composite Repair Drawing 10
CE Declaration of Conformity - Machinery 11
CE Declaration of Conformity - ATEX 12

Warren Rupp, Inc A Unit of IDEX Corporation • P.O. Box 1568, Mansfield, Ohio 44902 USA
Telephone (419) 524-8388 • Fax (419) 522-7867 • warrenrupp.com

©Copyright 2017 IDEX AODD, Inc. All rights reserved.

Safety Information

⚠ IMPORTANT



Read the safety warnings and instructions in this manual before pump installation and start-up. Failure to comply with the recommendations stated in this manual could damage the pump and void factory warranty.



When the pump is used for materials that tend to settle out or solidify, the pump should be flushed after each use to prevent damage. In freezing temperatures the pump should be completely drained between uses.

⚠ CAUTION



Before pump operation, inspect all fasteners for loosening caused by gasket creep. Retighten loose fasteners to prevent leakage. Follow recommended torques stated in this manual.



Nonmetallic pumps and plastic components are not UV stabilized. Ultraviolet radiation can damage these parts and negatively affect material properties. Do not expose to UV light for extended periods of time.



WARNING
The use of non-OEM replacement parts will void (or negate) agency certifications, including CE, ATEX, CSA, 3A and EC1935 compliance (Food Contact Materials). Warren Rupp, Inc. cannot ensure nor warrant non-OEM parts to meet the stringent requirements of the certifying agencies.

⚠ WARNING



When used for toxic or aggressive fluids, the pump should always be flushed clean prior to disassembly.



Before maintenance or repair, shut off the compressed air line, bleed the pressure, and disconnect the air line from the pump. Be certain that approved eye protection and protective clothing are worn at all times. Failure to follow these recommendations may result in serious injury or death.



Airborne particles and loud noise hazards. Wear eye and ear protection.



In the event of diaphragm rupture, pumped material may enter the air end of the pump, and be discharged into the atmosphere. If pumping a product that is hazardous or toxic, the air exhaust must be piped to an appropriate area for safe containment.



Take action to prevent static sparking. Fire or explosion can result, especially when handling flammable liquids. The pump, piping, valves, containers and other miscellaneous equipment must be properly grounded.



This pump is pressurized internally with air pressure during operation. Make certain that all fasteners are in good condition and are reinstalled properly during reassembly.



Use safe practices when lifting

RECYCLING

Many components of SANDPIPER® AODD pumps are made of recyclable materials. We encourage pump users to recycle worn out parts and pumps whenever possible, after any hazardous pumped fluids are thoroughly flushed.

ATEX Pumps - Conditions For Safe Use

1. Ambient temperature range is as specified in tables 1 to 3 on the next page *(per Annex I of DEKRA 18ATEX0094X)*

2. ATEX compliant pumps are suitable for use in explosive atmospheres when the equipment is properly grounded in accordance with local electrical codes

3. **Non-Metallic ATEX Pumps only — See Explanation of Pump Nomenclature / ATEX Details Page**
   Conductive Polypropylene, conductive Acetal or conductive PVDF pumps are not to be installed in applications where the pumps may be subjected to oil, greases and hydraulic liquids.

4. The optionally provided solenoids shall be protected by a fuse corresponding to its rated current (max 3*Irat according to EN 60127) or by a motor protecting switch with short circuit and thermal instantaneous tripping (set to the rated current) as short circuit protection. For solenoids with a very low rated current, a fuse with the lowest current value according to the indicated standard will be sufficient. The fuse may be accommodated in the associated supply unit or shall be separately arranged. The rated voltage of the fuse shall be equal or greater than the stated rated voltage of the solenoid. The breaking capacity of the fuse shall be as high as or higher than the maximum expected short circuit current at the location of the installation (usually 1500 A). The maximum permissible ripple is 20% for all dc solenoids.
   ***Not applicable for all pump models — See Explanation of Pump Nomenclature / ATEX Details Page**

5. When operating pumps equipped with non-conductive diaphragms that exceed the maximum permissible projected area, as defined in EN ISO 80079-36 : 2016 section 6.7.5 table 8, the following protection methods must be applied
   - Equipment is always used to transfer electrically conductive fluids or
   - Explosive environment is prevented from entering the internal portions of the pump, i.e. dry running.

6. Pumps provided with the pulse output kit and used in the potentially explosive atmosphere caused by the presence of the combustible dust shall be installed in such a way that the pulse output kit is protected against impact
   ***Not applicable for all pump models — See Explanation of Pump Nomenclature / ATEX Details Page**

Temperature Tables

Table 1. Category 1 & Category 2 ATEX Rated Pumps

Ambient Temperature Range [°C]	Process Temperature Range [°C][1]	Temperature Class	Maximum Surface Temperature [°C]
-20°C to +60°C	-20°C to +80°C	T5	T100°C
	-20°C to +108°C	T4	T135°C
	-20°C to + 160°C	T3	T200°C
	-20°C to +177°C	(225°C) T2	

[1]Per CSA standards ANSI LC6-2018 US & Canadian Technical Letter R14, G-Series Natural Gas Models are restricted to (-20°C to + 80°C) process temperature

Table 2. Category 2 ATEX Rated Pumps Equipped with Pulse Output Kit or Integral Solenoid:

Ambient Temperature Range [°C]	Process Temperature Range [°C]	Temperature Class	Maximum Surface Temperature [°C]	Options	
				Pulse Output Kit	Integral Solenoid
-20°C to +60°C	-20°C to +100°C	T5	T100	X	
-20°C to +50°C	-20°C to +100°C	T5	T100		X

[2]ATEX Pulse output or Intergral Solenoid Not Available For All Pump Models See Explanation of Pump Nomenclature / ATEX Details Page

Table 3. Category M1 ATEX Rated Pumps for Mining

Ambient Temperature Range [°C]	Process Temperature Range [°C]
-20°C to +60°C	-20°C to +150°C

Note: The ambient temperature range and the process temperature range should not exceed the operating temperature range of the applied non-metallic parts as listed in the manuals of the pumps.

PRINCIPLE OF PUMP OPERATION

This ball valve pump is powered by compressed air and is a 1:1 pressure ratio design. It alternately pressurizes the inner side of one diaphragm chamber, while simultaneously exhausting the other inner chamber. This causes the diaphragms, which are connected by a common rod, to move endwise. Air pressure is applied over the entire surface of the diaphragm, while liquid is discharged from the opposite side. The diaphragm operates under a balanced condition during the discharge stroke, which allows the unit to be operated at discharge heads over 200 feet (61 meters) of water head.

Since the diaphragms are connected by a common rod, secured by plates to the center of the diaphragms, one diaphragm performs the discharge stroke, while the other is pulled to perform the suction stroke in the opposite chamber.

For maximum diaphragm life, keep the pump as close to the liquid being pumped as possible. Positive suction head in excess of 10 feet of liquid (3.048 meters) may require a back pressure regulating device. This will maximize diaphragm life.

Alternate pressuring and exhausting of the diaphragm chamber is performed by means of an externally mounted, pilot operated, four-way spool type air distribution valve. When the spool shifts to one end of the valve body, inlet air pressure is applied to one diaphragm chamber and the other diaphragm chamber exhausts. When the spool shifts to the opposite end of the valve body, the porting of chambers is reversed. The air distribution valve spool is moved by an internal pilot valve which alternately pressurizes one side of the air distribution valve spool, while exhausting the other side. The pilot valve is shifted at each end of the diaphragm stroke by the diaphragm plate coming in contact with the end of the pilot spool. This pushes it into position for shifting of the air distribution valve.

The chambers are manifolded together with a suction and discharge flap-type check valve for each chamber, maintaining flow in one direction through the pump.

INSTALLATION & START-UP

Locate the pump as close to the product being pumped as possible, keeping suction line length and number of fittings to a minimum. Do not reduce line size.

For installations of rigid piping, short flexible sections of hose should be installed between pump and piping. This reduces vibration and strain to the piping system. A Warren Rupp Tranquilizer® surge suppressor is recommended to further reduce pulsation in flow.

This pump was tested at the factory prior to shipment and is ready for operation. It is completely self-priming from a dry start for suction lifts of 10 feet (3.05 meters) or less. For suction lifts exceeding 20 feet of liquid, fill the chambers with liquid prior to priming.

AIR SUPPLY

Air supply pressures cannot exceed 125 psi (8.61 bar). Connect the pump air inlet to an air supply of sufficient capacity and pressure required for desired performance. When the air line is solid piping, use a short length of flexible hose [not less than 3/4" (19mm) in diameter] between pump and piping to eliminate strain to pipes.

PRINCIPLE OF PUMP OPERATION

This ball valve pump is powered by compressed air and is a 1:1 pressure ratio design. It alternately pressurizes the inner side of one diaphragm chamber, while simultaneously exhausting the other inner chamber. This causes the diaphragms, which are connected by a common rod, to move endwise. Air pressure is applied over the entire surface of the diaphragm, while liquid is discharged from the opposite side. The diaphragm operates under a balanced condition during the discharge stroke, which allows the unit to be operated at discharge heads over 200 feet (61 meters) of water head.

Since the diaphragms are connected by a common rod, secured by plates to the center of the diaphragms, one diaphragm performs the discharge stroke, while the other is pulled to perform the suction stroke in the opposite chamber.

For maximum diaphragm life, keep the pump as close to the liquid being pumped as possible. Positive suction head in excess of 10 feet of liquid (3.048 meters) may require a back pressure regulating device. This will maximize diaphragm life.

Alternate pressuring and exhausting of the diaphragm chamber is performed by means of an externally mounted, pilot operated, four-way spool type air distribution valve. When the spool shifts to one end of the valve body, inlet air pressure is applied to one diaphragm chamber and the other diaphragm chamber exhausts. When the spool shifts to the opposite end of the valve body, the porting of chambers is reversed. The air distribution valve spool is moved by an internal pilot valve which alternately pressurizes one side of the air distribution valve spool, while exhausting the other side. The pilot valve is shifted at each end of the diaphragm stroke by the diaphragm plate coming in contact with the end of the pilot spool. This pushes it into position for shifting of the air distribution valve.

The chambers are manifolded together with a suction and discharge flap-type check valve for each chamber, maintaining flow in one direction through the pump.

INSTALLATION & START-UP

Locate the pump as close to the product being pumped as possible, keeping suction line length and number of fittings to a minimum. Do not reduce line size.

For installations of rigid piping, short flexible sections of hose should be installed between pump and piping. This reduces vibration and strain to the piping system. A Warren Rupp Tranquilizer® surge suppressor is recommended to further reduce pulsation in flow.

This pump was tested at the factory prior to shipment and is ready for operation. It is completely self-priming from a dry start for suction lifts of 10 feet (3.05 meters) or less. For suction lifts exceeding 20 feet of liquid, fill the chambers with liquid prior to priming.

AIR SUPPLY

Air supply pressures cannot exceed 125 psi (8.61 bar). Connect the pump air inlet to an air supply of sufficient capacity and pressure required for desired performance. When the air line is solid piping, use a short length of flexible hose [not less than 3/4" (19mm) in diameter] between pump and piping to eliminate strain to pipes.

AIR INLET & PRIMING

For start-up, open an air valve approximately 1/2" to 3/4" turn. After the unit primes, an air valve can be opened to increase flow as desired. If opening the valve increases cycling rate, but does not increase flow rate, cavitation has occurred, and the valve should be closed slightly.

For the most efficient use of compressed air and the longest diaphragm life, throttle the air inlet to the lowest cycling rate that does not reduce flow.

A NOTE ABOUT AIR VALVE LUBRICATION

The Sandpiper pump's pilot valve and main air valve assemblies are designed to operate WITHOUT lubrication. This is the preferred mode of operation. There may be instances of personal preference, or poor quality air supplies when lubrication of the compressed air supply is required. The pump air system will operate with properly lubricated compressed air supplies. Proper lubrication of the compressed air supply would entail the use of an air line lubricator (available from Warren Rupp) set to deliver

one drop of 10 wt., non-detergent oil for every 20 SCFM of air the pump consumed at its point of operation. Consult the pump's published Performance Curve to determine this.

It is important to remember to inspect the sleeve and spool set routinely. It should move back and forth freely. This is most important when the air supply is lubricated. If a lubricator is used, oil accumulation will, over time, collect any debris from the compressed air. This can prevent the pump from operating properly.

Water in the compressed air supply can create problems such as icing or freezing of the exhaust air causing the pump to cycle erratically, or stop operating. This can be addressed by using a point of use air dryer to supplement a plant's air drying equipment. This device will remove excess water from the compressed air supply and alleviate the icing or freezing problem.

ESADS: EXTERNALLY SERVICEABLE AIR DISTRIBUTION SYSTEM

Please refer to the exploded view drawing and parts list in the Service Manual supplied with your pump. If you need replacement or additional copies, contact your local Warren Rupp Distributor, or the Warren Rupp factory Literature Department at the number shown below. To receive the correct manual, you must specify the MODEL and TYPE information found on the name plate of the pump.

MODELS WITH 1" SUCTION/DISCHARGE OR LARGER, AND METAL CENTER SECTIONS:

The main air valve sleeve and spool set is located in the valve body mounted on the pump with four hex head capscrews. The valve body assembly is removed from the pump by removing these four hex head capscrews.

With the valve body assembly off the pump, access to the sleeve and spool set is made by removing four hex head capscrews (each end) on the end caps of the valve body assembly. With the end caps removed, slide the spool back and forth in the sleeve. The spool is closely sized to the sleeve and must move freely to allow for proper pump operation. An accumulation of oil, dirt or other contaminants from the pump's air supply, or from a failed diaphragm, may prevent the spool from moving freely. This can cause the spool to stick in a position that prevents the pump from operating. If this is the case, the sleeve and spool set should be removed from the valve body for cleaning and further inspection.

Remove the spool from the sleeve. Using an arbor press or bench vise (with an improvised mandrel), press the sleeve from the valve body. Take care not to damage the sleeve. At this point, inspect the o-rings on the sleeve for nicks, tears or abrasions. Damage of this sort could happen during assembly or servicing. A sheared or cut o-ring can allow the pump's compressed air supply to leak or bypass within the air valve assembly, causing the pump to leak compressed air from the pump air exhaust or not cycle properly. This is most noticeable at pump dead head or high discharge pressure conditions. Replace any of these o-rings as required or set up a routine, preventive maintenance schedule to do so on a regular basis. This practice should include cleaning the spool and sleeve components with a safety solvent or equivalent, inspecting for signs of wear or damage, and replacing worn components.

To re-install the sleeve and spool set, lightly lubricate the o-rings on the sleeve with an o-ring assembly lubricant or lightweight oil (such as 10 wt. air line lubricant). Re-install one end cap, gasket and bumper on the valve body. Using the arbor press or bench vise that was used in disassembly, carefully press the sleeve back into the valve body, without shearing the o-rings. You may have to clean the surfaces of the valve body where the end caps mount. Material may remain from the old gasket. Old material not cleaned from this area may cause air leakage after reassembly. Take care that the bumper stays in place allowing the sleeve to press in all the way. Reinstall the spool, opposite end cap, gasket and bumper on the valve body. After inspecting and cleaning the gasket surfaces on the valve body and intermediate, reinstall the valve body on the pump using new gaskets. Tighten the four hex head capscrews evenly and in an alternating cross pattern.

AIR EXHAUST

If a diaphragm fails, the pumped liquid or fumes can enter the air end of the pump, and be exhausted into the atmosphere. When pumping hazardous or toxic materials, pipe the exhaust to an appropriate area for safe disposition.

This pump can be submerged if materials of construction are compatible with the liquid. The air exhaust must be piped above the liquid level. Piping used for the air exhaust must not be smaller than 1" (2.54 cm). Reducing the pipe size will restrict air flow and reduce pump performance .When the product source is at a higher level than the pump (flooded suction), pipe the exhaust higher than the product source to prevent siphoning spills. (See page 7)

Freezing or icing-up of the air exhaust can occur under certain temperature and humidity conditions. Use of an air dryer unit should eliminate most icing problems.

BETWEEN USES

When used for materials that tend to settle out or transform to solid form, the pump should be completely flushed after each use, to prevent damage. Product remaining in the pump between uses could dry out or settle out. This could cause problems with valves and diaphragms at re-start. In freezing temperatures, the pump must be drained between uses in all cases.

CHECK VALVE SERVICING

Need for inspection or service is usually indicated bt poor priming, unstable cycling, reduced performance or the pump's cycling, but not pumping.

Inspect the surfaces of both check valves and seats for wear or damage that could prevent proper sealing. If pump is to prime properly, valves must seat air tight.

DIAPHRAGM SERVICING

Remove the eight bolts (four each side) securing the manifold assemblies to the outer chambers. Remove the eight bolts securing the outer chamber to the inner chamber. Remove the diaphragm assembly (outer plate, diaphragm, inner plate) by turning the assembly counterclockwise using a 16/16" (2.38 cm) wrench on the outer plate lugs. To disassemble the diaphragm assemblies, secure in a vise and turn the outer plate counterclockwise using the 16/16" wrench.

Procedures for reassembling the diaphragms are the reverse of the above. The diaphragms must be installed with their natural bulge to the outside, toward the outer diaphragm plate. Install the inner plate with the flat face against the diaphragm.

After all components are in position in a vise and hand tight, tighten with a wrench to approximately 40 ft. Ibs. (54.23 Newton meters) torque. After both diaphragm assemblies have been assembled, thread one assembly into the shaft (hold the shaft near the middle in a vise with soft jaws, to protect the finish). Install this sub assembly into the pump and secure by placing the outer chamber on the end with the diaphragm. This holds the assembly in place while the opposite side is installed. Torque the last diaphragm assembly to 30 ft. Ibs. (40.67 Newton meters). This final torquing will lock the diaphragm assemblies together. Place the rernaining outer chamber on the open end and loosely tighten the bolts. Replace the manifold assemblies to square the flanges before final tightening of the remaining bolts. the diaphragm assemblies together. Place the rernaining outer chamber on the open end and loosely tighten the bolts. Replace the manifold assemblies to square the flanges before final tightening of the remaining bolts.

REASSEMBLY

All procedures for reassembling the pump are the reverse of the previous instructions with further instructions as shown:

1. The diaphragm assemblies are to be installed with the natural bulge outward or toward the head of the center screw. Make sure both plates are installed with outer radii against the diaphragm. After all components are in position in a vise and hand tight, set a torque wrench for 480 inch pounds (40 ft. pounds) (54.23 Newton meters)

using a 1 1/16 (27mm) wrench or six pointed socket. After each diaphragm sub assembly has been completed, thread one assembly into the shaft (held near the middle in a vise having soft jaws to protect the finish) making sure the stainless steel washer is in place on the capscrew.

Make sure 1/4"-20 mounting screw has been removed and that the bumper (Item #19 on drawing) is in place in the shaft.

Install this sub assembly into the pump and secure by placing the outer chamber housing and capscrews on the end with the diaphragm. This will hold the assembly in place while the opposite side is installed. Make sure the last diaphragm assembly is torqued to 30 ft. lbs. (40.67 Newton meters) before placing the outer diaphragm over the capscrews. If the holes in the diaphragm flange do not line up with the holes in the chamber flange, turn the diaphragm assembly in the direction of tightening to align the holes so that the capscrews can be inserted. This final torquing of the last diaphragm assembly will lock the two diaphragm assemblies together. Place remaining outer chamber on the open end and tighten down the securing fasteners gradually and evenly on both sides.

PILOT VALVE

The pilot valve assembly is accessed by removing the main air distribution valve body from the pump and lifting the pilot valve body out of the intermediate housing.

Most problems with the pilot valve can be corrected by replacing the o-rings. Always grease the spool prior to inserting it into the sleeve. If the sleeve is removed from the body, reinsertion must be at the chamfered side. Grease the o-rings to slide the sleeve into the valve body. Securely insert the retaining ring around the sleeve. When reinserting the pilot valve, push both plungers (located inside the intermediate bracket) out of the path of the pilot valve spool ends to avoid damage.

PILOT VALVE ACTUATOR

Bushings for the pilot valve actuators are threaded into the intermediate bracket from the outside. The plunger may be removed for inspection or replacement. First remove the air distribution valve body and the pilot valve body from the pump. The plungers can be located by looking into the intermediate. It may be necessary to use a fine piece of wire to pull them out. The bushing can be turned out through the inner chamber by removing the outer chamber assembly. Replace the bushings if pins have bent.

TROUBLESHOOTING

PROBLEM: Pump cycles but will not pump. (Note: higher suction lifts require faster cycling speed for priming.)
POSSIBLE CAUSES:

A. Air leak in suction line.
B. Excessive suction lift.
C. Check valve not seating properly.
D. Leakage at joint of suction manifold or elbow flange.
E. Suction line or strainer plugged.
F. Diaphragm ruptured.

PROBLEM: Pump will not cycle. (Note: Always disconnect air supply to relieve air pressure before disassembling any portion of pump.)
POSSIBLE CAUSES:

A. Discharge hose or line plugged, or discharge head requirement greater than air supply pressure. (Disconnect discharge line to check.)
B. Spool in air distribution valve not shifting. (Remove end cap and check spool — must slide freely.)
C. Diaphragm ruptured. (Air will escape out discharge line in this case.)
D. Blockage in diaphragm chamber preventing movement. (Shut off air supply and reopen after pressure is relieved.)

PROBLEM: Uneven discharge flow. (Indicates one chamber not operating properly.)
POSSIBLE CAUSES:

A. Check valve not sealing properly in one chamber.
B. Diaphragm failure in one chamber.
C. Air leak at suction manifold joint or elbow flange one side.

For additional information, see the Warren Rupp Troubleshooting Guide.

WARRANTY:

This unit is guaranteed for a period of five years against defective material and workmanship.

PUMPING HAZARDOUS LIQUIDS

When a diaphragm fails, the pumped liquid or fumes enter the air end of the pump. Fumes are exhausted into the surrounding environment. When pumping hazardous or toxic materials, the exhaust air must be piped to an appropriate area for safe disposal. See illustration #1 at right.

This pump can be submerged if the pump materials of construction are compatible with the liquid being pumped. The air exhaust must be piped above the liquid level. See illustration #2 at right. Piping used for the air exhaust must not be smaller than 1" (2.54 cm) diameter. Reducing the pipe size will restrict air flow and reduce pump performance. When the pumped product source is at a higher level than the pump (flooded suction condition), pipe the exhaust higher than the product source to prevent siphoning spills. See illustration #3 at right.

CONVERTING THE PUMP FOR PIPING THE EXHAUST AIR

The following steps are necessary to convert the pump to pipe the exhaust air away from the pump.

The air distribution valve has 3/4" NPT threads for piped exhaust.

IMPORTANT INSTALLATION NOTE:

The manufacturer recommends installing a flexible conductive hose or connection between the pump and any rigid plumbing. This reduces stresses on the molded threads of the air exhaust port. Failure to do so may result in damage to the air distribution valve body.

Any piping or hose connected to the pump's air exhaust port must be conductive and physically supported. Failure to support these connections could also result in damage to the air distribution valve body.

CONVERTED EXHAUST ILLUSTRATION

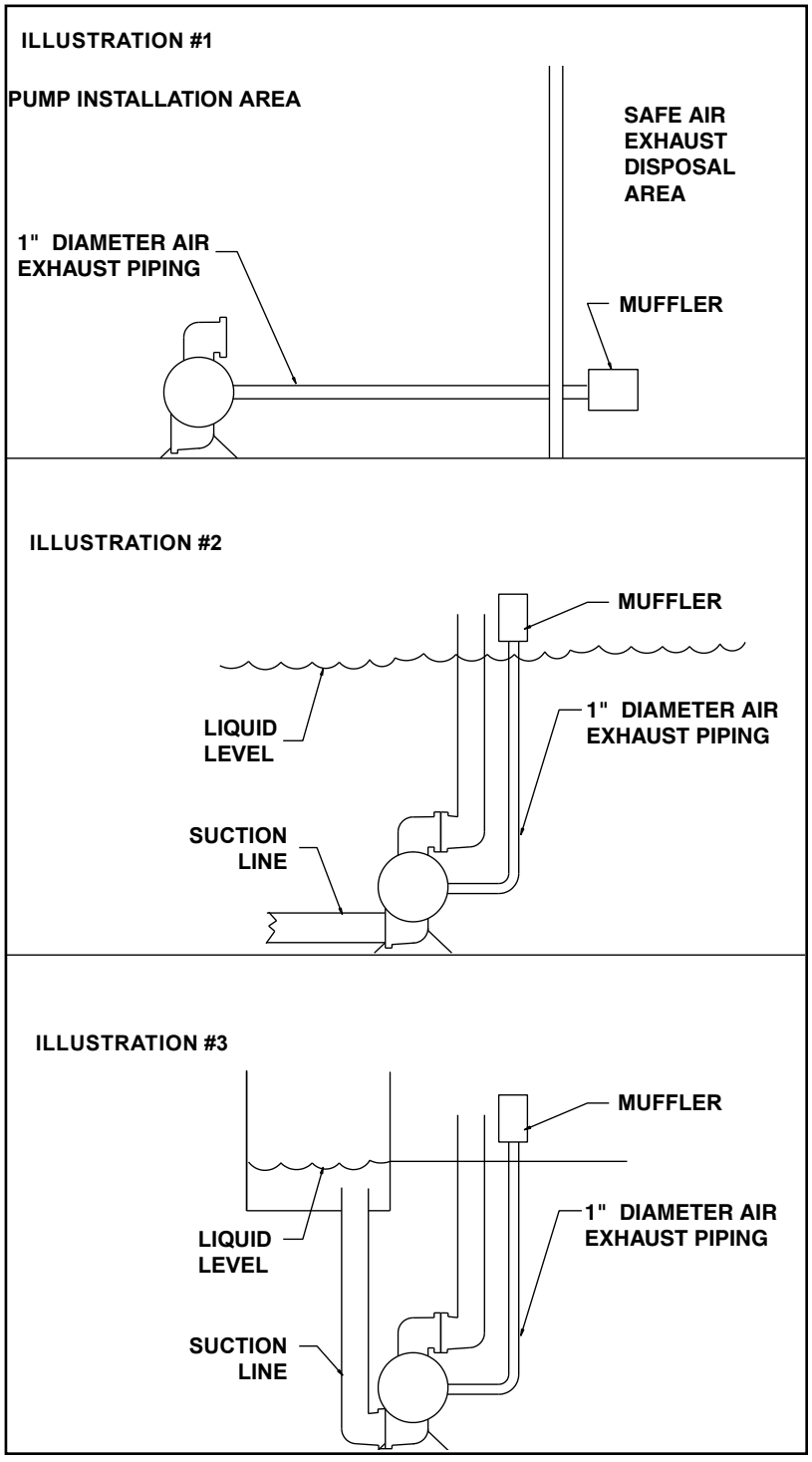

Material Codes

The Last 3 Digits of Part Number

000	Assembly, sub-assembly; and some purchased items
010	Cast Iron
012	Powered Metal
015	Ductile Iron
020	Ferritic Malleable Iron
025	Music Wire
080	Carbon Steel, AISI B-1112
100	Alloy 20
110	Alloy Type 316 Stainless Steel
111	Alloy Type 316 Stainless Steel (Electro Polished)
112	Alloy C
113	Alloy Type 316 Stainless Steel (Hand Polished)
114	303 Stainless Steel
115	302/304 Stainless Steel
117	440-C Stainless Steel (Martensitic)
120	416 Stainless Steel (Wrought Martensitic)
123	410 Stainless Steel (Wrought Martensitic)
148	Hardcoat Anodized Aluminum
149	2024-T4 Aluminum
150	6061-T6 Aluminum
151	6063-T6 Aluminum
152	2024-T4 Aluminum (2023-T351)
154	Almag 35 Aluminum
155	356-T6 Aluminum
156	356-T6 Aluminum
157	Die Cast Aluminum Alloy #380
158	Aluminum Alloy SR-319
159	Anodized Aluminum
162	Brass, Yellow, Screw Machine Stock
165	Cast Bronze, 85-5-5-5
166	Bronze, SAE 660
170	Bronze, Bearing Type, Oil Impregnated
175	Die Cast Zinc
180	Copper Alloy
305	Carbon Steel, Black Epoxy Coated
306	Carbon Steel, Black PTFE Coated
307	Aluminum, Black Epoxy Coated
308	Stainless Steel, Black PTFE Coated
309	Aluminum, Black PTFE Coated
310	PVDF Coated
330	Zinc Plated Steel
331	Chrome Plated Steel
332	Aluminum, Electroless Nickel Plated
333	Carbon Steel, Electroless Nickel Plated
335	Galvanized Steel
336	Zinc Plated Yellow Brass
337	Silver Plated Steel
340	Nickel Plated
342	Filled Nylon
353	Geolast; Color: Black
354	Injection Molded #203-40 Santoprene- Duro 40D +/-5; Color: RED
355	Thermal Plastic
356	Hytrel
357	Injection Molded Polyurethane
358	Urethane Rubber (Some Applications) (Compression Mold)
359	Urethane Rubber
360	Nitrile Rubber. Color coded: RED
361	FDA Accepted Nitrile
363	FKM (Fluorocarbon). Color coded: YELLOW
364	E.P.D.M. Rubber. Color coded: BLUE
365	Neoprene Rubber. Color coded: GREEN
366	Food Grade Nitrile
368	Food Grade EPDM
370	Butyl Rubber. Color coded: BROWN
371	Philthane (Tuftane)
374	Carboxylated Nitrile
375	Fluorinated Nitrile
378	High Density Polypropylene
379	Conductive Nitrile
405	Cellulose Fibre
408	Cork and Neoprene
425	Compressed Fibre
426	Blue Gard
440	Vegetable Fibre
465	Fibre
500	Delrin 500
501	Delrin 570
502	Conductive Acetal, ESD-800
503	Conductive Acetal, Glass-Filled
505	Acrylic Resin Plastic
506	Delrin 150
520	Injection Molded PVDF Natural color
521	Conductive PVDF
540	Nylon
541	Nylon
542	Nylon
544	Nylon Injection Molded
550	Polyethylene
551	Glass Filled Polypropylene
552	Unfilled Polypropylene
553	Unfilled Polypropylene
555	Polyvinyl Chloride
556	Black Vinyl
557	Conductive Polypropylene
558	Conductive HDPE
559	Glass-Filled Conductive Polypropylene
570	Rulon II
580	Ryton
590	Valox
591	Nylatron G-S
592	Nylatron NSB
600	PTFE (virgin material) Tetrafluorocarbon (TFE)
601	PTFE (Bronze and moly filled)
602	Filled PTFE
603	Blue Gylon
604	PTFE
606	PTFE
607	Envelon
608	Conductive PTFE
610	PTFE Integral Silicon
611	PTFE Integral FKM
632	Neoprene/Hytrel
633	FKM (Fluorocarbon)/PTFE
634	EPDM/PTFE
635	Neoprene/PTFE
637	PTFE, FKM (Fluorocarbon)/PTFE
638	PTFE, Hytrel/PTFE
639	Nitrile/TFE
643	Santoprene/EPDM
644	Santoprene/PTFE
650	Bonded Santoprene and PTFE
654	Santoprene Diaphragm, PTFE Overlay Balls and seals
656	Santoprene Diaphragm and Check Balls/EPDM Seats
661	EPDM/Santoprene

Delrin and Hytrel are registered tradenames of E.I. DuPont.

Gylon is a registered tradename of Garlock, Inc.

Nylatron is a registered tradename of Polymer Corp.

Santoprene is a registered tradename of Monsanto Corp.

Rulon II is a registered tradename of Dixion Industries Corp.

Ryton is a registered tradename of Phillips Chemical Co.

Valox is a registered tradename of General Electric Co.

Warren Rupp, SANDPIPER, Portapump, Tranquilizers and SludgeMaser are registered tradenames of IDEX AODD, Inc.

ITEM NO.	PART NUMBER	DESCRIPTION	TOTAL RQD.
1	070-006-170	Bearing, Sleeve	2
2	114-002-156	Bracket, Intermediate	1
3	**720-004-360**	**Seal, U-Cup**	**2**
4	**135-016-162**	**Bushing, Threaded, w/O-Ring**	
5	**620-011-114**	**Plunger, Actuator**	**2**
6	**095-073-000**	**Pilot Valve Body Assembly**	**1**
6-A	095-070-551	Valve Body	1
6-B	755-025-000	Sleeve (w/O-Ring)	1
6-C	560-033-360	O-Ring (Sleeve)	4
6-D	775-026-000	Spool (w/O-Ring)	1
6-E	560-023-360	O-Ring (Spool)	2
6-F	675-037-080	Retaining Ring	1
7	**360-041-379**	**Gasket, Valve Body**	**1**
8	**560-001-360**	**O-Ring**	**2**
9	095-043-156	Body, Valve	1
10	**132-014-358**	**Bumper, Valve Spool**	**2**
11	165-011-157	Cap, End	2
12	**360-048-425**	**Gasket, Valve Body**	**1**
13	360-010-425	Gasket, End Cap	2
14	560-020-360	O-Ring	6
15	**031-012-000**	**Sleeve & Spool Set**	**1**
16	170-032-330	Capscrew, Hex Head 1/4-20 X .75	8
17	170-045-330	Capscrew, Hex Head 5/16-18 X 1.25	4
18	**132-002-360**	**Bumper, Diaphragm**	**2**
19	196-001-157	Chamber, Inner	2
20	286-007-365	Diaphragm	2
	286-007-360	Diaphragm	2
	286-007-354	Diaphragm	2
21	**560-022-360**	**O-Ring**	**2**
22	**685-007-120**	**Rod, Diaphragm**	**1**
23	170-023-330	Capscrew, Hex Head 7/16-14 X 1.75	16
24	170-024-330	Capscrew, Hex Head 7/16-14 X 1	8
25	618-003-330	Plug, Pipe (SS & Alloy C Qty. 2)	4
26	900-006-330	Washer, Lock	8
27	612-215-330	Plate, Diaphragm	2
28	612-224-330	Plate, Outer	2
29	170.010.115	Capscrew	2
31	545-007-330	Nut, Hex	16
32	722-040-365	Seat, Valve	4
	722-040-360	Seat, Valve	4
	722-040-364	Seat, Valve	4

ITEM NO.	PART NUMBER	DESCRIPTION	TOTAL RQD.
33	050-017-365	Ball, Check Valve	4
	050-017-360	Ball, Check Valve	4
	050-017-354	Ball, Check Valve	4
34	518-032-156	Manifold, Suction (MSB2-B Only)	1
	518-032-156E	Manifold, Suction	1
35	518-033-156	Manifold, Discharge (NPT)	2
	518-033-156E	Manifold, Discharge	2
36	902-003-000	Stat-O-Seal	2
37	170-082-330	Capscrew, Hex Head	4
38	900-003-330	Washer, Lock	8
39	545-008-330	Nut, Hex (Not used on CI units)	8
41	196-047-156	Chamber, Outer	2
42	530-036-000	Muffler, Exhaust	1
48	800-012-156	Base, Strainer (MSB2-A)	1
49	518-044-156	Manifold, Suction (MSB2-A)	1
50	170-055-330	Capscrew, Hex Head (MSB2-A)	4
51	258-016-156	Cover, Suction (MSB2-A)	1
52	170-035-330	Capscrew, Hex Head (MSB2-A)	1
53	**900-006-330**	**Washer, Lock (MSB2-A)**	**1**
54	570-009-360	Pad, Wear	2
	570-009-365	Pad, Wear	2
55	115-161-080	Handle Bracket	2
56	115-162-080	Handle Bracket	2
57	405-012-330	Handle	2
Not Shown			
	031-019-156	Main Air Valve Assembly (Includes Items 9, 10, 11, 13, 14, 15, 16)	1

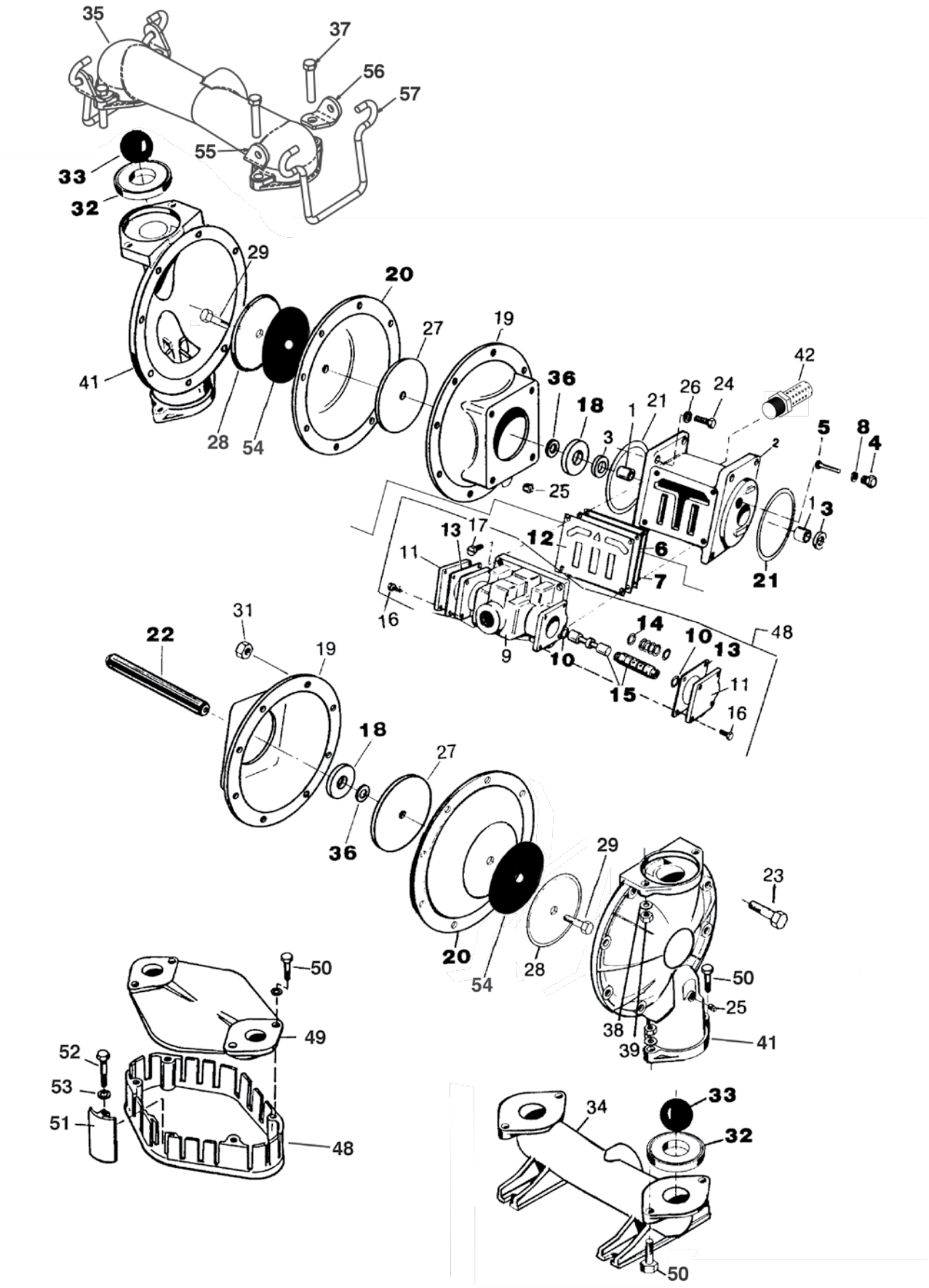
35
37
56
57
55
33
32
29
20
27
19
41
28
54
36
18
1
21
26
24
42
3
5
8
4
2
25
1
3
13
17
12
6
11
7
21
16
14
10
13
48
31
22
19
9
10
15
11
16
18
27
36
29
23
20
54
28
50
50
25
38
39
41
49
52
53
51
48
34
33
32
50

5 - YEAR Limited Product Warranty

Warren Rupp, Inc. ("Warren Rupp") warrants to the original end-use purchaser that no product sold by Warren Rupp that bears a Warren Rupp brand shall fail under normal use and service due to a defect in material or workmanship within five years from the date of shipment from Warren Rupp's factory. Warren Rupp brands include Warren Rupp®,SANDPIPER®, SANDPIPER Signature Series™, MARATHON®, Porta-Pump®, SludgeMaster™ and Tranquilizer®.

The use of non-OEM replacement parts will void (or negate) agency certifications, including CE, ATEX, CSA, 3A and EC1935 compliance (Food Contact Materials). Warren Rupp, Inc. cannot ensure nor warrant non-OEM parts to meet the stringent requirements of the certifying agencies.

~ See sandpiperpump.com/content/warranty-certifications for complete warranty, including terms and conditions, limitations and exclusions. ~

WARREN RUPP, INC.

Declaration of Conformity

Manufacturer: Warren Rupp, Inc., 800 N. Main Street
Mansfield, Ohio, 44902 USA

Certifies that Air-Operated Double Diaphragm Pump Series: HDB, HDF, M Non-Metallic, S Non-Metallic, M Metallic, S Metallic, T Series, G Series, U Series, EH and SH High Pressure, RS Series, W Series, F Series, SMA and SPA Submersibles, and Tranquilizer® Surge Suppressors comply with the European Community Directive 2006/42/EC on Machinery, according to Annex VIII. This product has used Harmonized Standard EN809:2012, Pumps and Pump Units for Liquids - Common Safety Requirements, to verify conformance.

David Roseberry
Signature of authorized person

October 20, 2005
Date of issue

Director of Engineering
Title

Authorised Representative:
IDEX Pump Technologies
R79 Shannon Industrial Estate
Shannon, Co. Clare, Ireland

Attn: Barry McMahon

February 27, 2017
Date of revision

IDEX

Revision Level: F

CE

WARREN RUPP, INC.

ATEX

IDEX

EU Declaration of Conformity

Manufacturer:
Warren Rupp, Inc.
A Unit of IDEX Corporation
800 North Main Street
Mansfield, OH 44902 USA

Warren Rupp, Inc. declares that Air Operated Double Diaphragm Pumps (AODD) and Surge Suppressors listed below comply with the requirements of **Directive 2014/34/EU** and all applicable standards.

Applicable Standards

- EN ISO 80079-36: 2016
- EN ISO 80079-37: 2016
- EN ISO 60079-25: 2010

1. AODD Pumps and Surge Suppressors - Technical File No.: 20310400-1410/MER

Hazardous Location Applied:



II 2 G Ex h IIC T5...225°C (T2) Gb
II 2 D Ex h IIIC T100°C...T200°C Db
II 2 G Ex h IIB T5...225°C (T2) Gb
II 2 D Ex h IIIB T100°C...T200°C Db

- Metallic pump models with external aluminum components (S Series, HD Series, G Series, DMF Series, MSA Series, U Series, F Series, T Series)
- Conductive plastic pump models with integral muffler (S Series, PB Series)
- Tranquilizer® surge suppressors

2. AODD Pumps - EU Type Examination Certificate No.: DEKRA 18ATEX0094X - DEKRA Certification B.V. (0344)
Meander 1051
6825 MJ Arnhem
The Netherlands

Hazardous Location Applied:



I M1 Ex h I Ma
II 1 G Ex h IIC T5...225°C (T2) Ga
II 1 D Ex h IIIC T100°C...T200°C Da
II 2 G Ex h ia IIC T5 Gb
II 2 D Ex h ia IIIC T100°C Db
II 2 G Ex h mb IIC T5 Gb
II 2 D Ex mb tb IIIC T100° Db

- Metallic pump models with no external aluminum (S series, HD Series, G series)
- Conductive plastic pumps equipped with metal muffler (S series, PB Series)
- ATEX pump models equipped with ATEX rated pulse output kit or solenoid kit

➢ *See "ATEX Details" page in user's manual for more information*
➢ *See "Safety Information" page for conditions of safe use*

DATE/APPROVAL/TITLE:
26 SEP 2018

David Roseberry

David Roseberry, Director of Engineering