**CALL TOLL FREE 877-742-2878 FOR SALES AND SUPPORT**
**Return to BurtProcess.com**

# PETROLEUM 120

## 2" x 1-1/2" End Suction Centrifugal Pump

Specifically designed for petroleum basedfluids, MP's Petroleum 120 series is available in three distinct models: SO 120, SG 120 and SE 120.

Designed to close-couple to 184TC frame electric motors, the models are also available as PumPAKs®. Additional mounting options include pedestal.

Pump rotation in 90° increments.

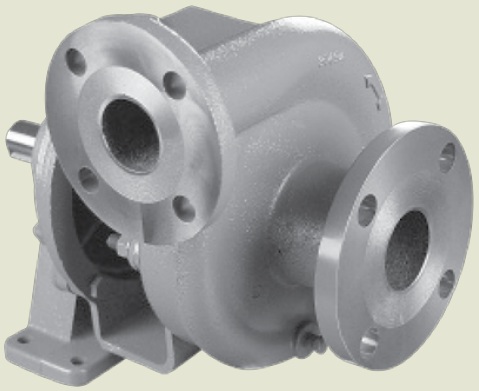

### Application

- Agricultural
- Industrial
- Marine
- OEM

### Features

- Non-spark clamp

## SPECIFICATIONS:

| | |
|---|---|
| Suction And Discharge | 2" x 1-1/2" 150# flange |
| Flow | Up to 200 GPM |
| Head Feet | Up to 135' |
| Impeller | SE 120 - semi open cast iron, SG 120 - semi open aluminum, SO 120 - semi open cast iron |
| Motor | Up to 7 1/2 HP |
| Drive Options | Close coupled 184TC, Hydraulic motor .45 cu. in., Hydraulic motor .58 cu. in., Hydraulic motor .73 cu. in., Pedestal, PumPAK® (without motor) |
| Seal | SE 120 - carbon / silicon carbide / viton, SG 120 - carbon / silicon carbide / viton, SO 120 - carbon / ni-resist / Viton |
| Mounting Options | SE 120 - Explosion proof Class 1 Group D, SG 120 - Explosion proof Class 1 Group D, SO 120 - TEFC |
| Compatible For | SE 120 - Ethanol, E 85, SG 120 - Gasoline, Avgas, Kerosene, Jet A/8, SO 120 - Biodiesel, Fuel Oil, Diesel |

# PETROLEUM 120

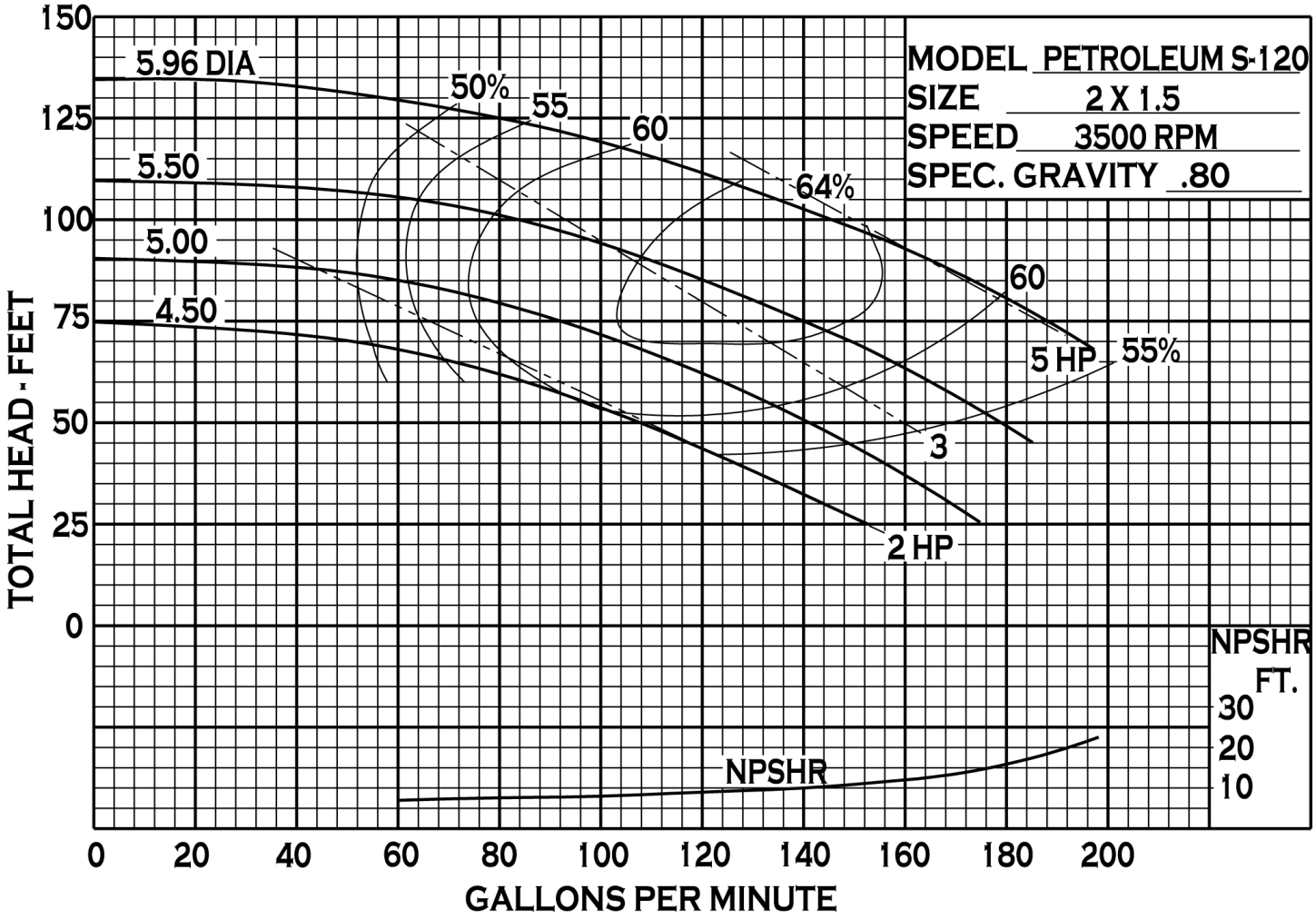


34800 BENNETT - FRASER, MI 48026-1686
(586) 293-8240 - FAX (586) 293-8469
(800) 563-8006 - www.mppumps.com

## PEDESTAL-MOUNT

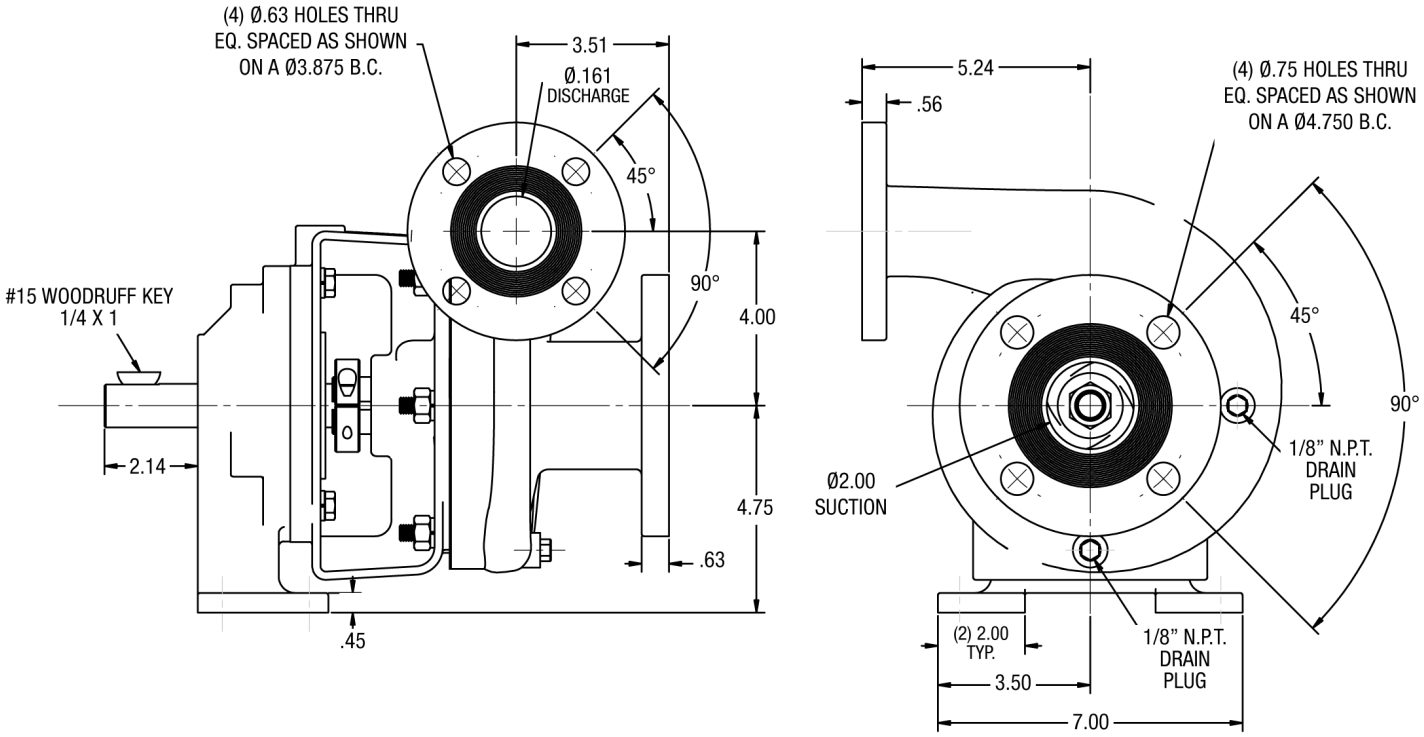


## CLOSE COUPLED - ELECTRIC MOTOR

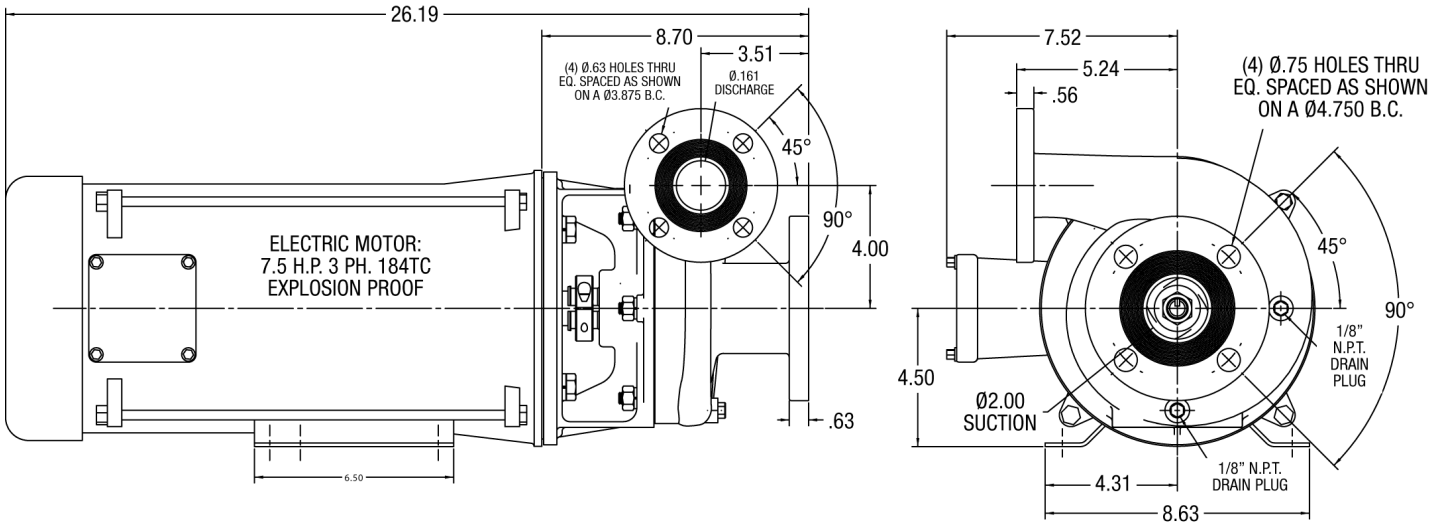


34800 BENNETT - FRASER, MI 48026-1686
(586) 293-8240 - FAX (586) 293-8469
(800) 563-8006 - www.mppumps.com

36140

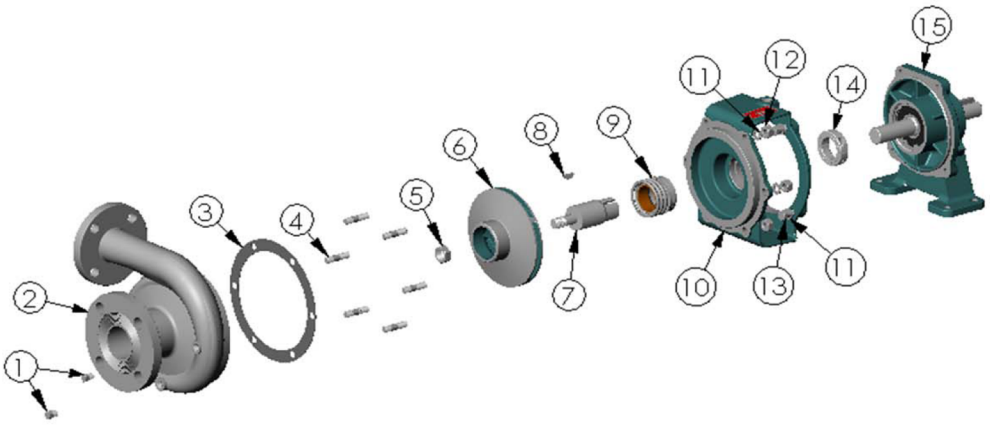


| | ITEM NO. | PART NO. | DESCRIPTION | QTY. | | ITEM NO. | PART NO. | DESCRIPTION | QTY. |
|---|---|---|---|---|---|---|---|---|---|
| | 1 | 21255 | PIPE PLUG - S.S.- 1/8" N.P.T. | 2 | * | 9 | 35651 | SEAL - 1.5" - TYPE 2 - CAR / SIC / VIT | 1 |
| | 2 | 31492 | HOUSING - DUCTILE IRON | 1 | | 10 | 35652 | ADAPTER - DUCTILE IRON | 1 |
| * | 3 | 25662 | GASKET - KLINGERSIL | 1 | | 11 | 21266 | LOCKWASHER - S.S. - 3/8" | 10 |
| | 4 | 21261 | STUD - S.S. - 3/8-16 | 6 | | 12 | 21268 | HEX NUT - S.S. - 3/8-16 | 6 |
| | 5 | 22655 | JAM NUT - S.S. - 5/8-18 | 1 | | 13 | 21259 | CAPSCREW - S.S. - 3/8-16 | 4 |
| | 6 | 27027 | IMPELLER - CAST IRON - Ø5.96 | 1 | | 14 | 35649 | CLAMP - B - 1.0" | 1 |
| | 7 | 22700 | DRIVE SLEEVE - S.S. - 1.0" | 1 | | 15 | 26163 | PEDESTAL ASSEMBLY | 1 |
| | 8 | 21762 | #8 WOODRUFF KEY - S.S. | 1 | | | | | |

*- RECOMMENDED REPLACEMENT PARTS

34800 BENNETT - FRASER, MI 48026-1686
(586) 293-8240 - FAX (586) 293-8469
(800) 563-8006 - www.mppumps.com