CALL TOLL FREE 877-742-2878 FOR SALES AND SUPPORT
Return to BurtProcess.com

PETROLEUM 180

3" X 1-1/2" End Suction Centrifugal Pump

Specifically designed for petroleum based fluids, MP's Petroleum 180 series is available in three distinct models: SO 180, SG 180 and SE 180.

Designed to close-couple to 215JP frame electric motors, the models are also available as PumPAKs®. Additional mounting options include pedestal, diesel-engine drive, and hydraulic drive.

Pump rotation in 90° increments.

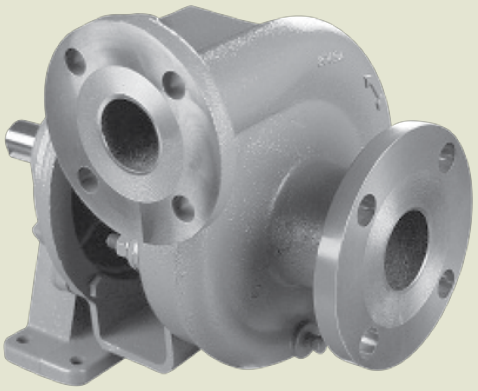

Application

- Agricultural
- Industrial
- Marine
- OEM

Features

- Non-spark clamp

SPECIFICATIONS:

Suction And Discharge	3" x 1 1 /2" 150# flange
Flow	Up to 320 GPM
Head Feet	Up to 160'
Impeller	SE 180 - enclosed cast iron, SG 180 - enclosed aluminum, SO 180 - enclosed cast iron
Motor	Up to 15 HP
Drive Options	Close coupled 215JP, Pedestal, PumPAK® (without motor)
Seal	SE 180 . . Type 2 Viton/Carbon/Silicon Carbide/SS, SG 180. . Type 2 Viton/Carbon/Silicon Carbide/SS, SO 180. . Type 21 Viton/Carbon/NiResist/SS
Compatible For	SE 180 - Ethanol, E 85, SG 180 - Gasoline, Avgas, Kerosene, Jet A/8, SO 180 - Biodiesel, Fuel Oil, Diesel
Mounting Options	SE 180 - Explosion proof Class 1 Group D, SG 180 - Explosion Proof Class 1 Group D, SO 180 - TEFC

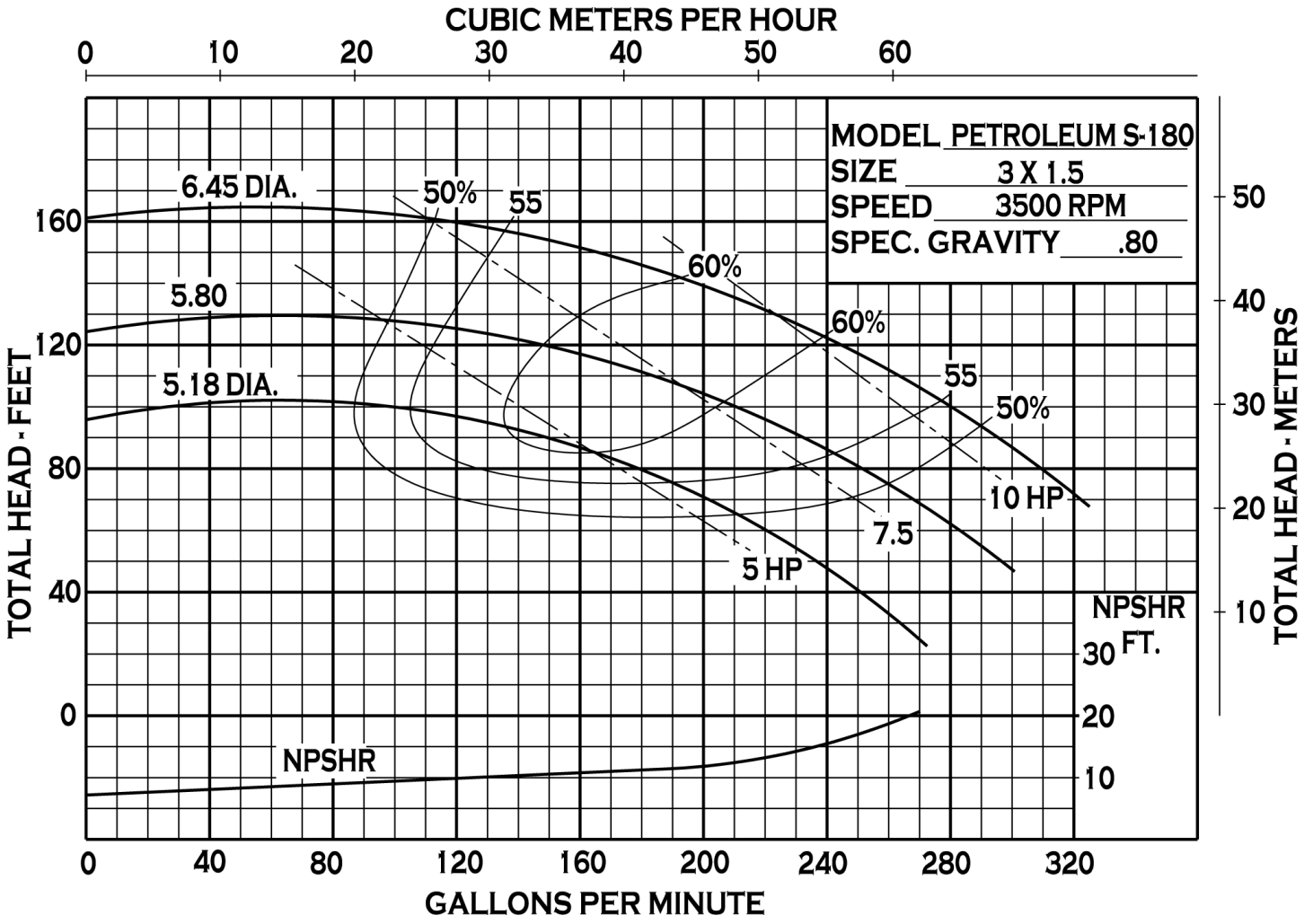

34800 BENNETT - FRASER, MI 48026-1686
(586) 293-8240 - FAX (586) 293-8469
(800) 563-8006 - www.mppumps.com

PEDESTAL-MOUNT

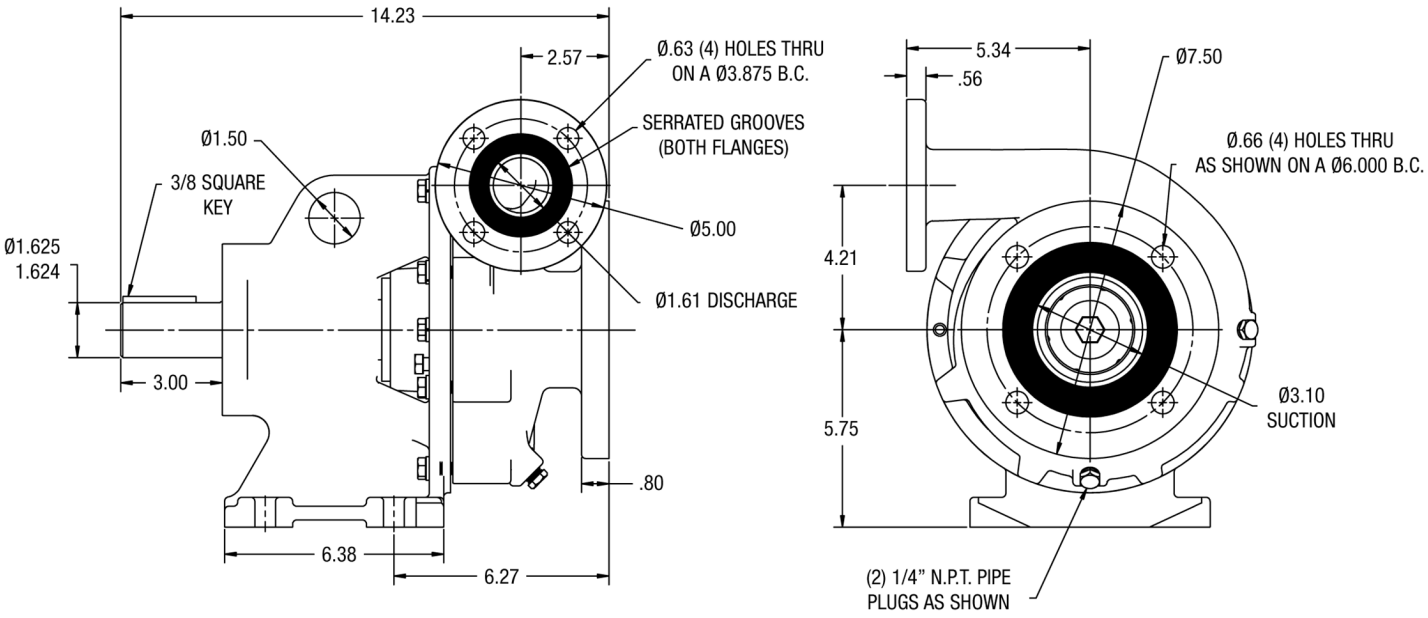

CLOSE COUPLED - ELECTRIC MOTOR

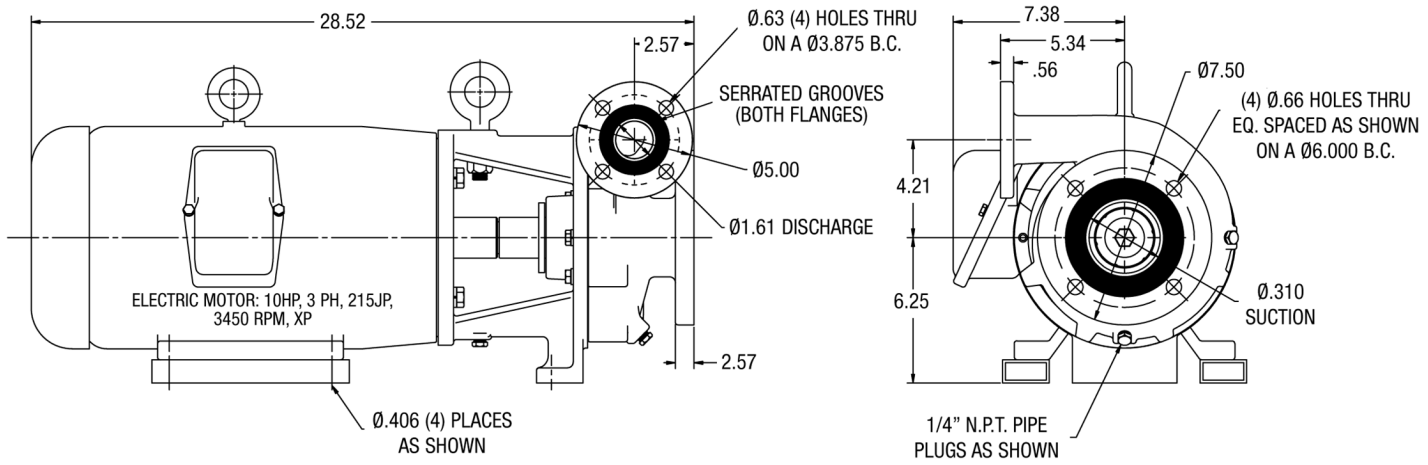

34800 BENNETT - FRASER, MI 48026-1686
(586) 293-8240 - FAX (586) 293-8469
(800) 563-8006 - www.mppumps.com

36261

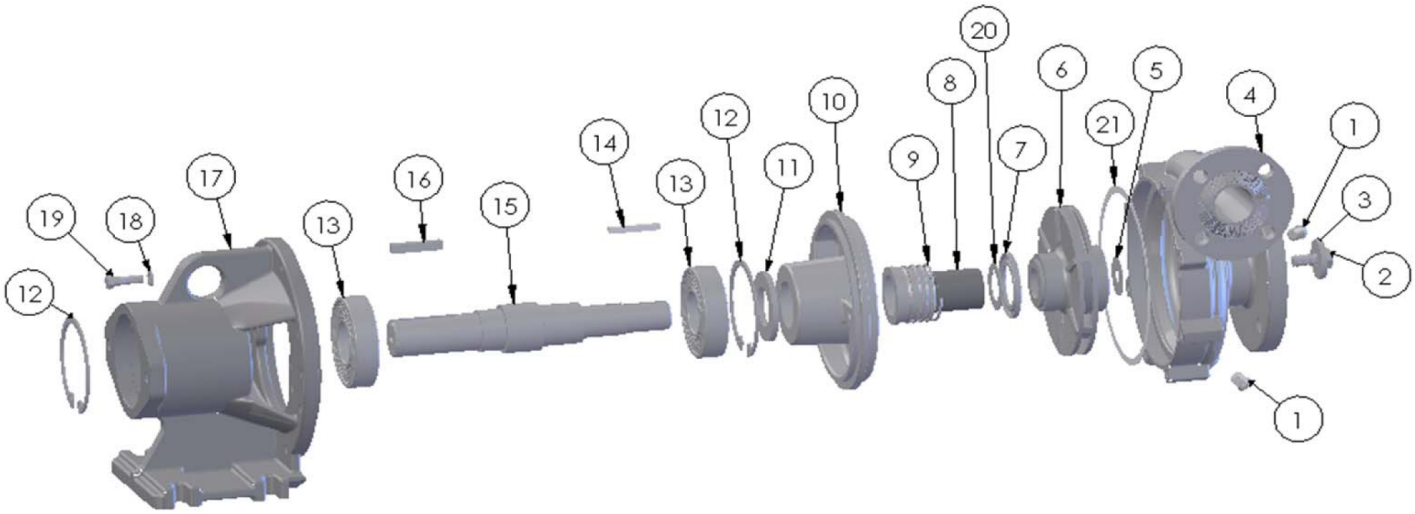

	ITEM NO.	PART NO.	DESCRIPTION	QTY.
	1	21267	PIPE PLUG S.S. - 1/4" NPT	2
	2	26674	HEX HEAD SEAL BOLT S.S. - 1/2-13 X 1.25	1
	3	26675	WASHER S.S. - 1.7 X .516 X .25	1
	4	36257	HOUSING DUCTILE	1
*	5	36156	GASKET - KLINGERSIL - C4433	1
	6	36260	IMPELLER DUCTILE	1
	7	26972	SPRING HOLDER S.S.	1
	8	26996	SHAFT SLEEVE S.S.	1
*	9	35711	SEAL ASSY. NRS - 1.75 T-2	1
	10	36258	ADAPTER DUCTILE - MECH. SEAL	1
*	11	26680	SLINGER NEOPRENE	1
	12	26998	SNAP RING STL.	2
	13	26997	BALL BEARING	2
	14	26796	SQUARE KEY S.S. - .25 X .25 X 2.12 LG.	1
	15	26999	SHAFT STL.	1
	16	27002	SQUARE KEY STL. - .38 X .38 X 2.13 LG.	1
	17	26994	BEARING HOUSING BODY - CAST IRON	1
	18	21266	LOCKWASHER S.S. - 3/8"	10
	19	21274	HEX HEAD CAP SCREW S.S. - 3/8-16 X 1.25	12
*	20	36157	GASKET - KLINGERSIL - C4433	1
*	21	36256	GASKET - KLINGERSIL - C4433	1

* RECOMMENDED REPLACEMENT PARTS

MP PUMPS by Gardner Denver
34800 BENNETT - FRASER, MI 48026-1686
(586) 293-8240 - FAX (586) 293-8469
(800) 563-8006 - www.mppumps.com