CALL TOLL FREE 877-742-2878 FOR SALES AND SUPPORT
Return to BurtProcess.com

PETROLEUM 30

3" x 3" Self Priming Centrifugal Pump

Petroleum 30 self-priming centrifugal pumps are capable of creating vacuum sufficient to lift liquids from heights up to 25 feet above the source. To handle many different fuels, the Petroleum 30 is available in three distinct models: PO, PG and PE 30.

A Petroleum 30 PumPAK® is a fully assembled and run tested pump end that can be easily coupled to a number of drivers such as hydraulic motors, 215TC, 256TC and 284TSC frame motors and gas engines. A bearing pedestal is also available for T-frame motor or belt drive.

Standard features include SS drive sleeve, SS fasteners, renewable wear plate, and a semi-open dynamically balanced impeller.

The Petroleum 30 Pump is available in three distinct models:
Model PG Pumps - Compatible For Gasoline, Kerosene, Avgas & Jet Fuel
Model PO Pumps - Compatible For BioDiesel, Fuel Oil & Diesel
Model PE Pumps - Compatible For Ethanol & E 85

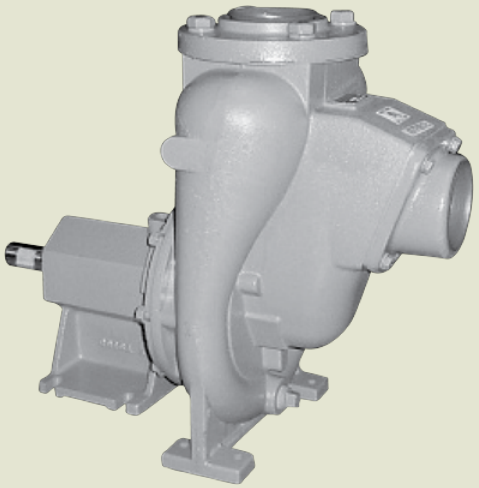

Application

- Agricultural
- Industrial
- Marine
- OEM

Features

- Non-spark clamp (on some models)
- Renewable wear plate
- Stainless steel drive sleeve
- Stainless steel fasteners
- Up to a 25' suction lift

SPECIFICATIONS:

Suction And Discharge	3" x 3" NPT
Flow	Up to 500 GPM
Head Feet	Up to 190'
Impeller	PE 30 - semi-open cast iron, 316 SS (optional), PG 30 - semi-open cast iron, aluminum (optional), PO 30 - semi-open cast iron
Motor	Up to 25 HP
Drive Options	Close coupled 215TC, Close coupled 256TC, Close coupled 286TSC, Pedestal, PumPAK® (without motor)
Seal	PE 30 - carbon / silicon carbide / Viton, PG 30 - carbon / silicon carbide / Viton, PO 30 - carbon / Ni-Resist / Viton
Compatible For	PE 30 - ethanol, E 85, PG 30 - gasoline, avgas, kerosene, jet A/8, PO 30 - biodiesel, fuel oil, diesel
Mounting Options	PE 30 - explosion proof, class 1, group D, PG 30 - explosion proof, class 1, group D, PO 30 - TEFC

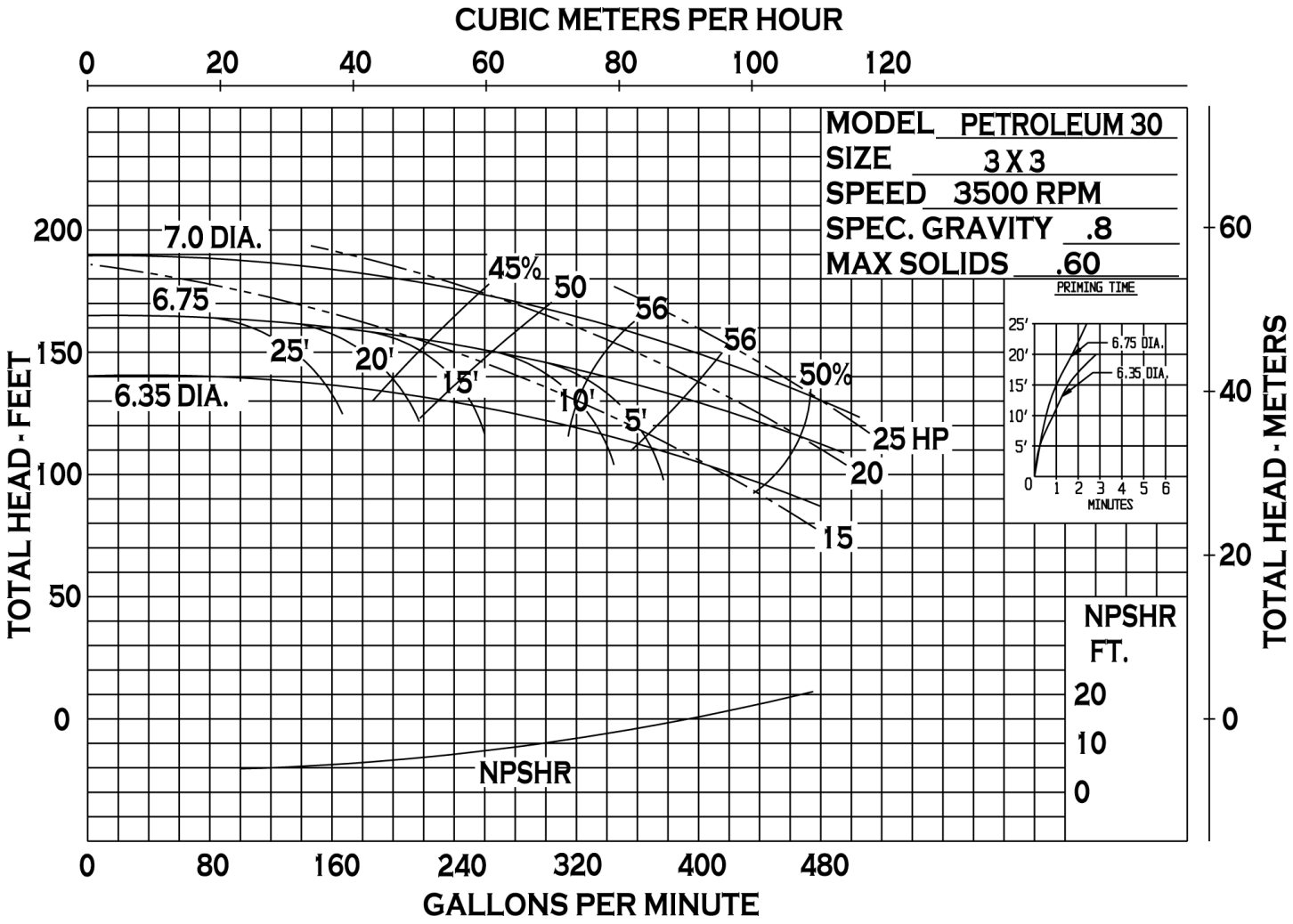

34800 BENNETT - FRASER, MI 48026-1686
(586) 293-8240 - FAX (586) 293-8469
(800) 563-8006 - www.mppumps.com

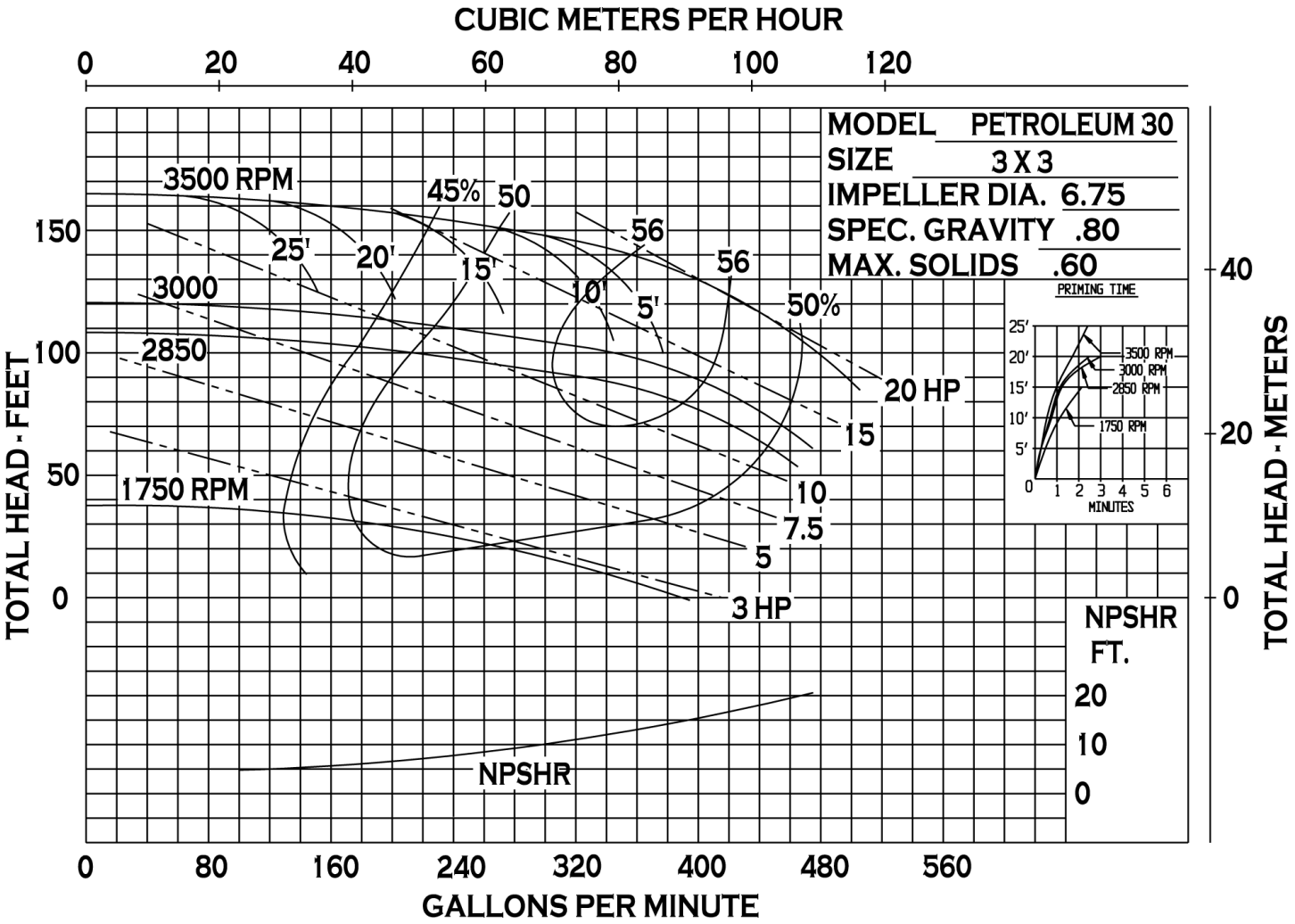

34800 BENNETT - FRASER, MI 48026-1686
(586) 293-8240 - FAX (586) 293-8469
(800) 563-8006 - www.mppumps.com

CLOSE COUPLED - ELECTRIC MOTOR

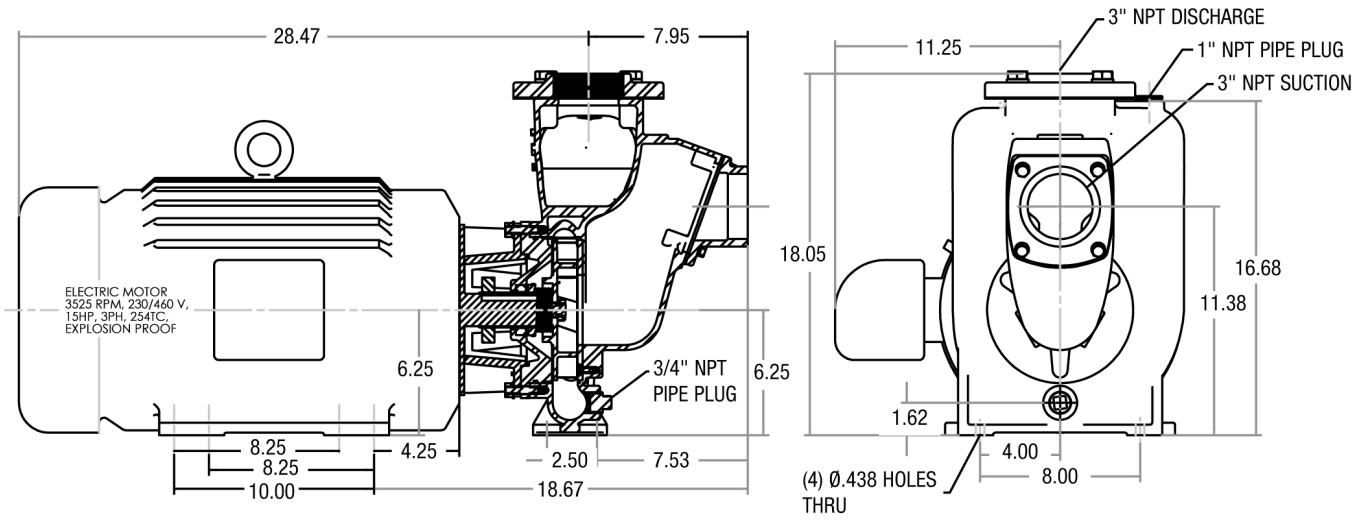

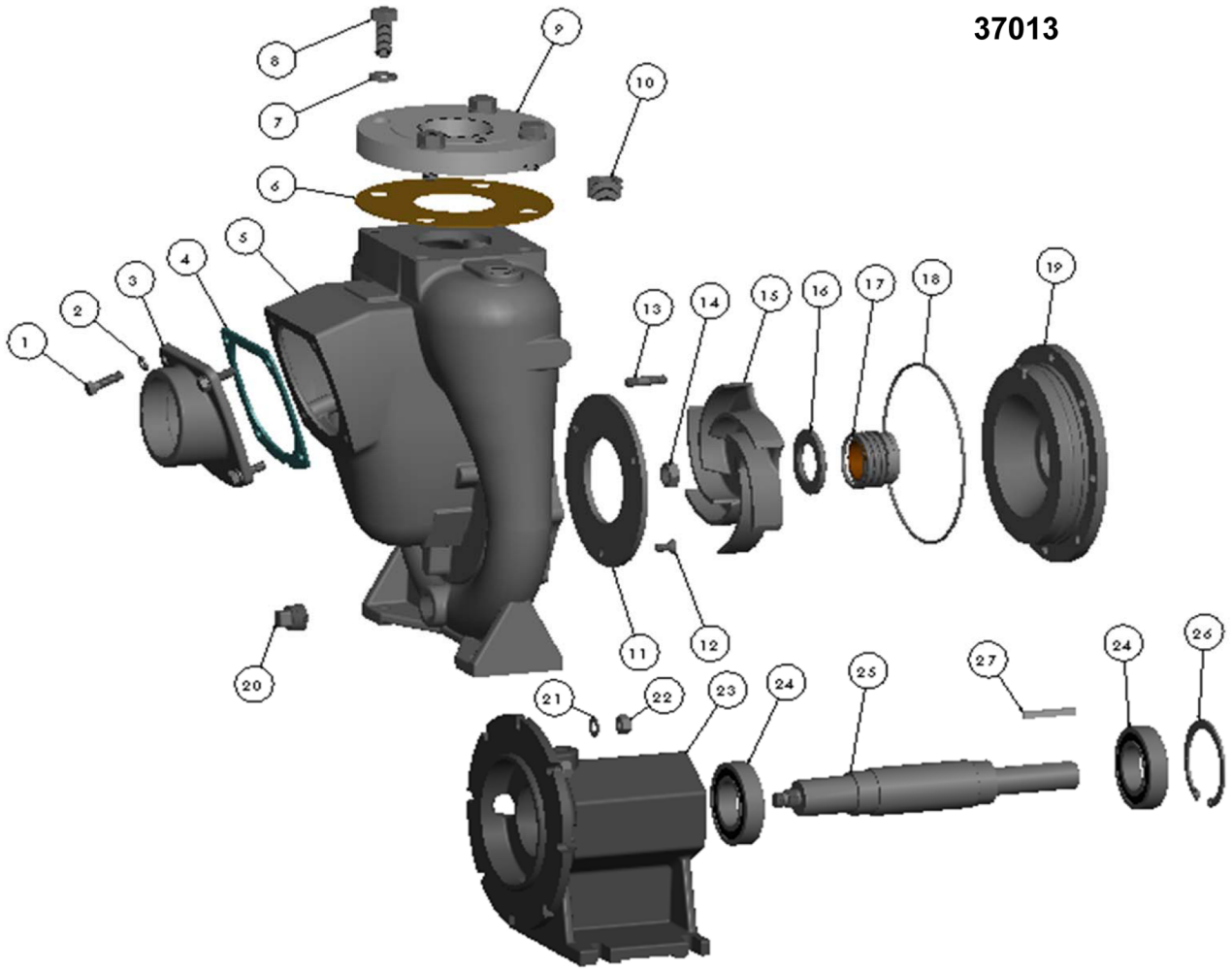

ITEM NO.	PART NO.	DESCRIPTION	QTY.		ITEM NO.	PART NO.	DESCRIPTION	QTY.
1	21274	CAP SCREW S.S.- 3/8-16 X 1.25"	4		14	29194	HEX JAM NUT S.S.- 5/8-18	1
2	21266	LOCK WASHER- 3/8	4	*	15	31819	IMPELLER D.I. - 7.00" DIA.	1
3	35697	INLET FLANGE D.I.	1		16	31838	SPACER S.S.	1
* 4	35689	GASKET CORK/BUNA	1	*	17	35651	MECH. SEAL- 1.50" T-2	1
5	35693	HOUSING D.I.	1	*	18	32020	O-RING- VITON AS568-262	1
* 6	35690	GASKET CORK/BUNA	1		19	35695	SEAL HOUSING D.I.	1
7	26853	LOCK WASHER 5/8	4		20	35650	PIPE PLUG S.S.- 3/4" NPT	1
8	32018	CAP SCREW S.S.- 5/8-11 X 1.50"	4		21	28053	WASHER S.S.- 3/8"	8
9	37012	DISCHARGE FLANGE - 2.5" NPT	1		22	21268	HEX NUT S.S.- 3/8-16	8
10	34780	PIPE PLUG S.S. - 1" NPT	1		23	31906	BEARING HOUSING C.I.	1
* 11	35699	WEAR PLATE ALUM.	1	*	24	31804	BALL BEARING	2
* 12	28742	FLAT HD. SCREW S.S.- 5/16-18 X .62"	3		25	31839	DRIVE SHAFT S.S.	1
13	21261	STUD S.S.- 3/8-16 X 1.63"	8		26	31803	INT. RETAINING RING STL.	1
					27	33232	SQUARE KEY STL.- .25" X 2.00"	1
					28	34196	SPRING KEEPER S.S. (NOT SHOWN)	1

PG30 PUMP ASSY.
*- RECOMMENDED REPLACEMENT PARTS

34800 BENNETT - FRASER, MI 48026-1686
(586) 293-8240 - FAX (586) 293-8469
(800) 563-8006 - www.mppumps.com

37277

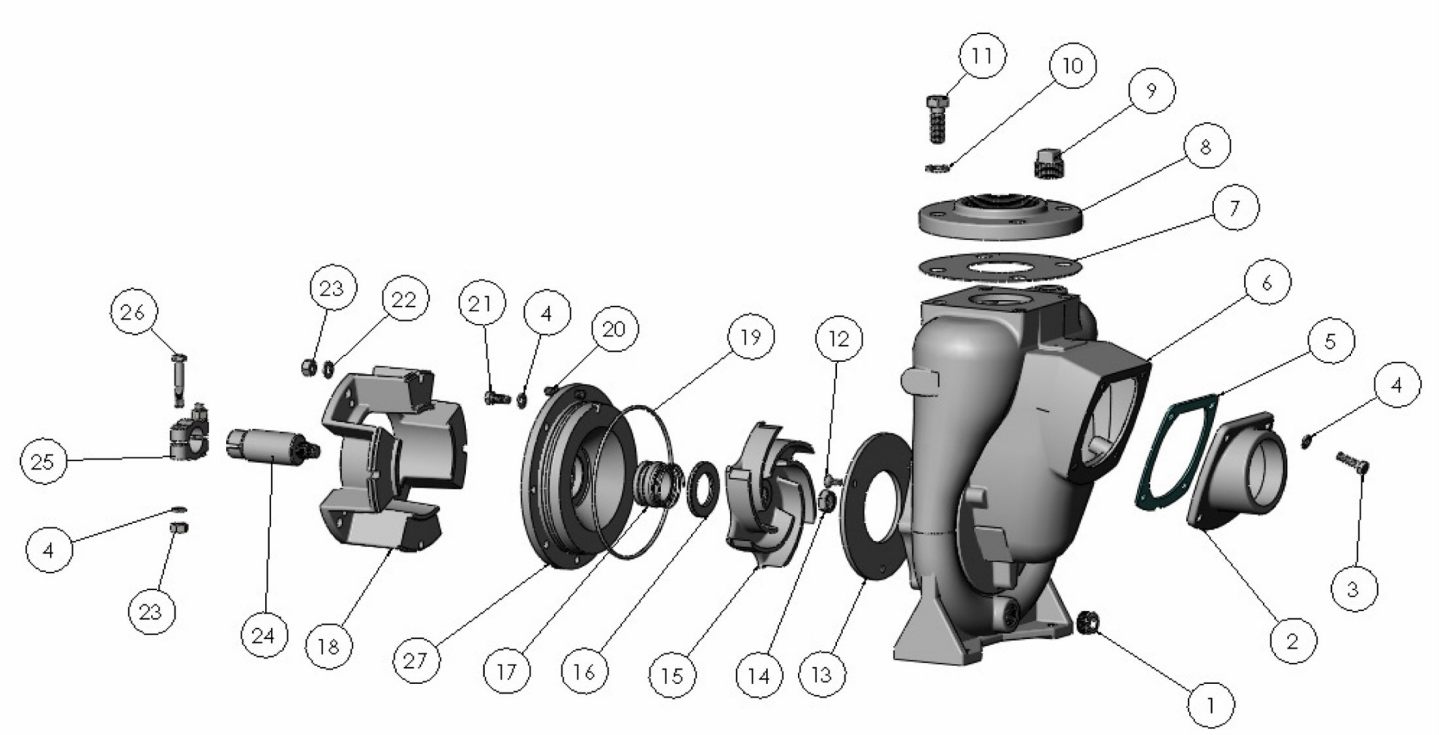

ITEM NO.	PART NO.	DESCRIPTION	QTY.		ITEM NO.	PART NO.	DESCRIPTION	QTY.
1	35650	PIPE PLUG S.S. - 3/4" NPT	1		16	31838	SPACER S.S.	1
2	40537	INLET FLANGE	1		17	22363	SEAL ASSY. TYPE 21 1.5"	1
3	21274	CAP SCREW S.S.- 3/8-16 X 1.25"	4		18	31829	ADAPTER C - CF 5-8 EING.	1
4	21266	LOCK WASHER S.S.- 3/8	10	*	19	32020	O-RING- VITON	1
* 5	35689	GASKET - CORK BUNA	1		20	33161	STUD S.S.- 3/8-16 X 2.00"	4
6	31822	VOLUTE C - MACH.	1		21	21251	CAPSCREW S.S. - 3/8-16 X 7/8	4
* 7	35690	GASKET - CORK BUNA	1		22	28053	WASHER S.S.- 3/8"	8
8	32033	DISCHARGE FLANGE- 3" NPT	1		23	21268	HEX NUT S.S.- 3/8-16	10
9	34780	PIPE PLUG S.S. - 1" NPT	1		24	31831	DRIVE SLEEVE S.S. - 1.00 I.D.	1
10	26853	LOCK WASHER S.S.- 5/8	4		25	22356	DRIVE CLAMP S.S. - 1"	2
11	36606	CAP SCREW S.S.- 5/8-11 X 1.75"	4		26	21269	CAPSCREW S.S. - 3/8-16 X 2.25"	2
12	28742	FLAT HD. SCREW S.S.- 5/16-18 X .62"	3		27	31824	SEAL HOUSING C - 1.5FM	1
* 13	31830	WEAR PLATE STL.	1					
14	29194	HEX JAM NUT S.S.- 5/8-18	1					
15	33177	IMPELLER D - 6.75" DIA.	1					

*- RECOMMENDED REPLACEMENT PARTS

34800 BENNETT - FRASER, MI 48026-1686
(586) 293-8240 - FAX (586) 293-8469
(800) 563-8006 - www.mppumps.com