CALL TOLL FREE 877-742-2878 FOR SALES AND SUPPORT
Return to BurtProcess.com

PETROLEUM 300

3" X 2-1/2" End Suction Centrifugal Pump

Specifically designed for petroleum based fluids, MP's Petroleum 300 series is available in three distinct models: SO 300, SG 300 and SE 300.

Designed to close-couple to 215JP and 256JP frame electric motors, the models are also available as PumPAK ®. Additional mounting options include pedestal.

Pump rotation in 90° increments.

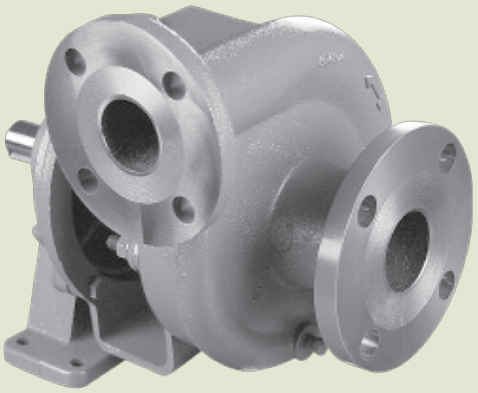

SPECIFICATIONS:

Suction And Discharge	3" x 2 1 /2" 150# flange
Flow	Up to 540 GPM
Head Feet	Up to 190'
Impeller	SE 300 - enclosed cast iron, SG 300 - enclosed aluminum, SO 300 - enclosed cast iron
Motor	Up to 25
Drive Options	Close coupled 215JP, Close coupled 256JP, Hydraulic motor 1.16 cu. in., Hydraulic motor 1.58 cu. in., Pedestal, PumPAK® (without motor)
Seal	SE 300 . . Type 2 viton/carbon/silicon carbide/SS, SG 300. . Type 2 viton/carbon/silicon carbide/SS, SO 300. . Type 21 viton/carbon/niresist/SS
Compatible For	SE 300 - Ethanol, E 85, SG 300 - Gasoline, Avgas, Kerosene, Jet A/8, SO 300 - Biodiesel, Fuel Oil, Diesel
Mounting Options	SE 300 - Explosion proof Class 1 Group D, SG 300 - Explosion Proof Class 1 Group D, SO 300 - TEFC

Application

- Agricultural
- Industrial
- Marine
- OEM

Features

- Non-spark clamp

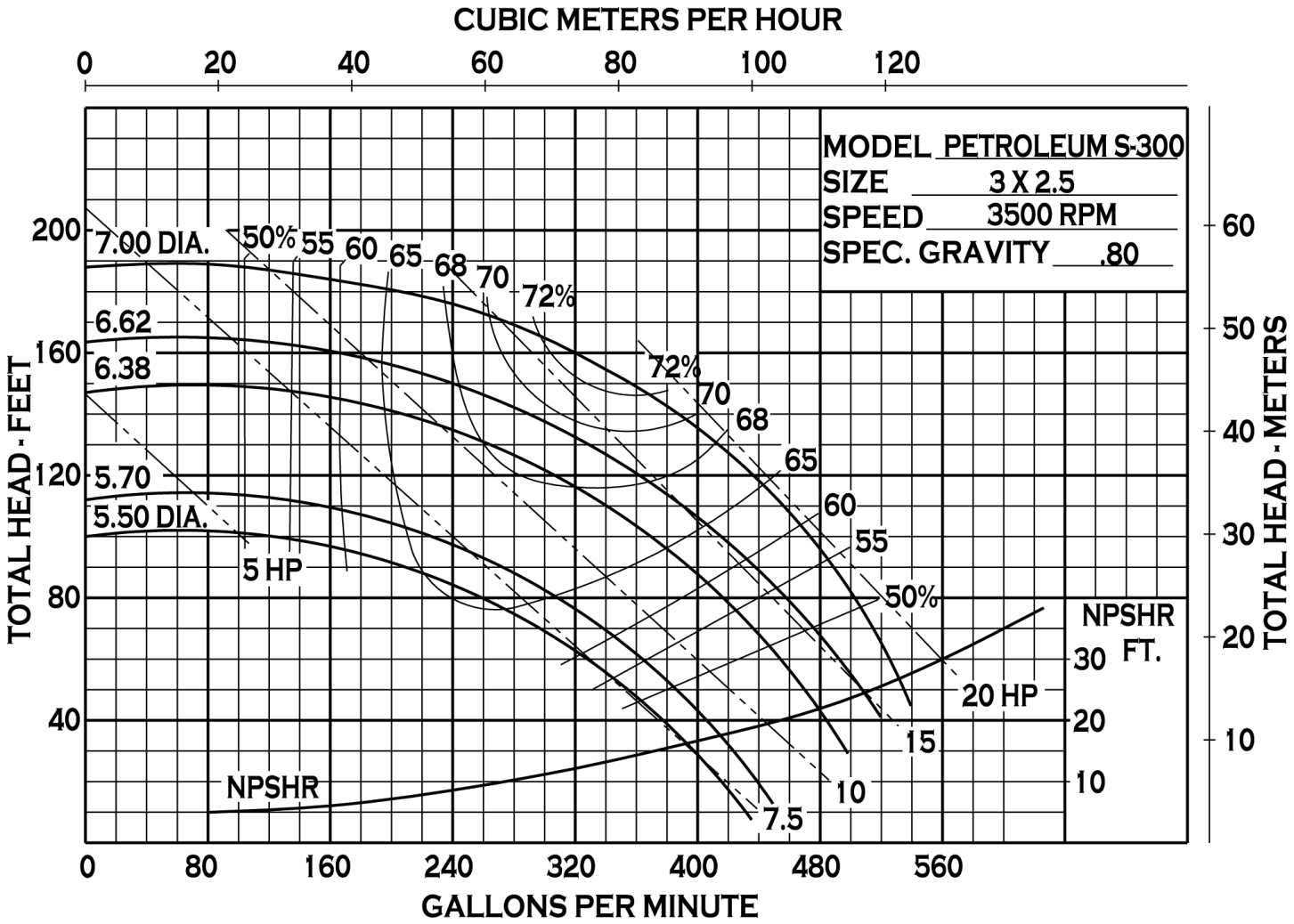

34800 BENNETT - FRASER, MI 48026-1686
(586) 293-8240 - FAX (586) 293-8469
(800) 563-8006 - www.mppumps.com

PEDESTAL-MOUNT

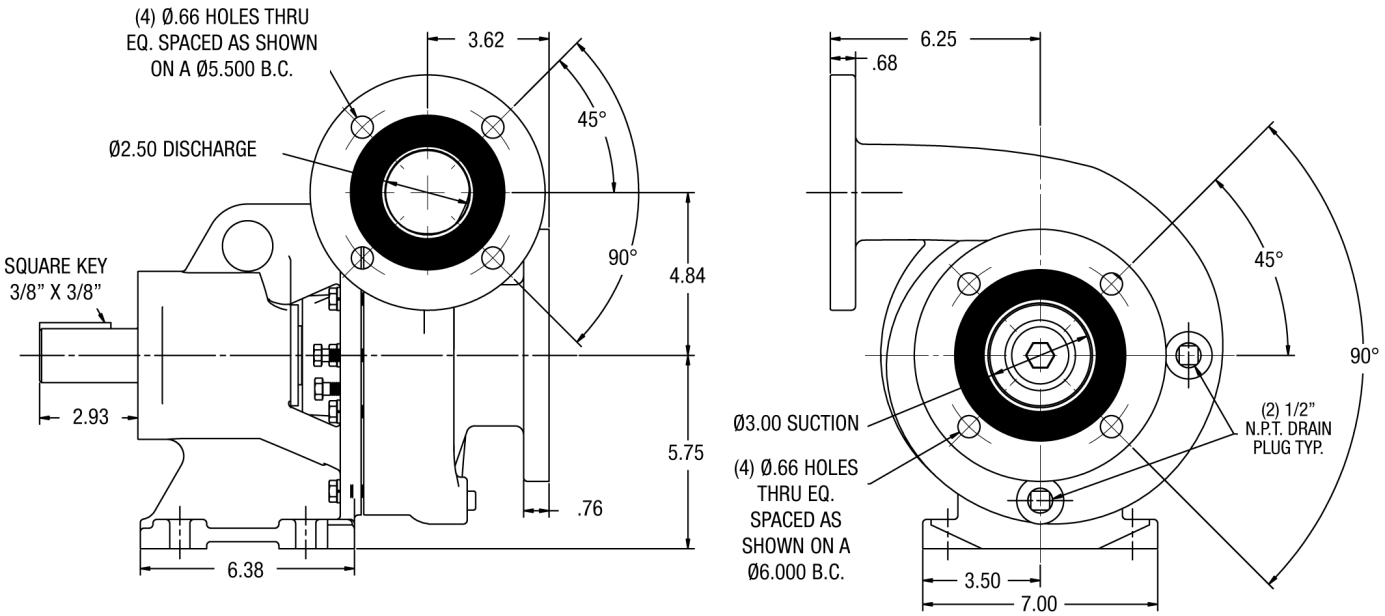

CLOSE COUPLED - ELECTRIC MOTOR

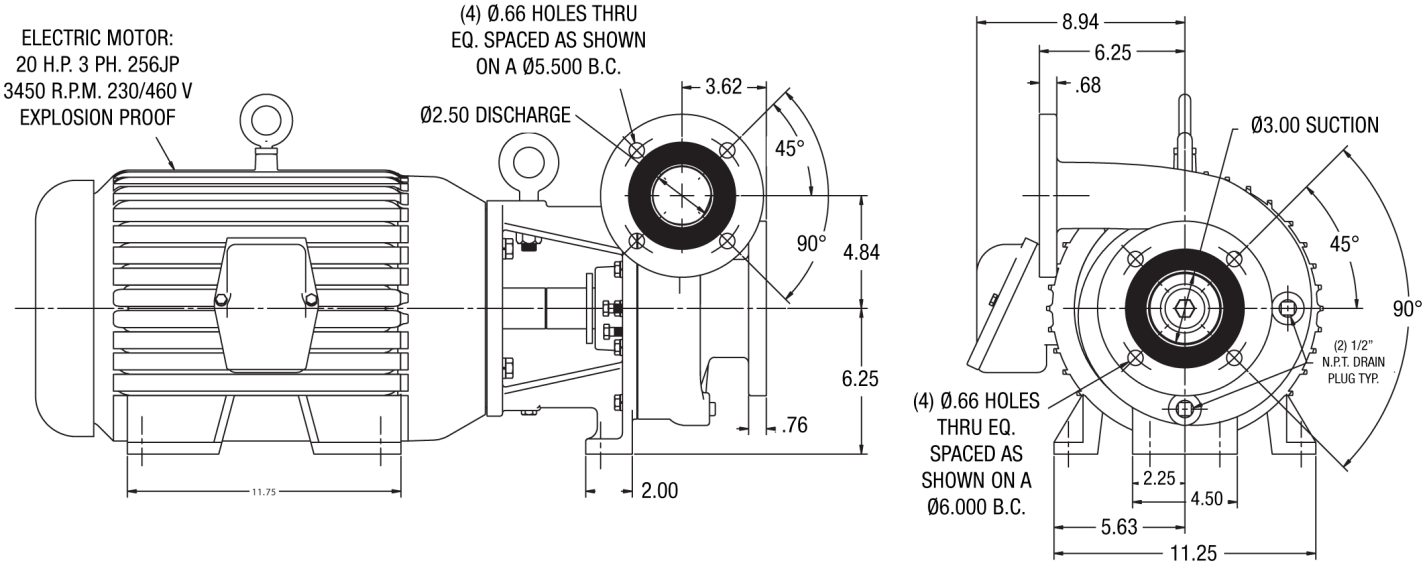

34800 BENNETT - FRASER, MI 48026-1686
(586) 293-8240 - FAX (586) 293-8469
(800) 563-8006 - www.mppumps.com

CLOSE COUPLED - ELECTRIC MOTOR

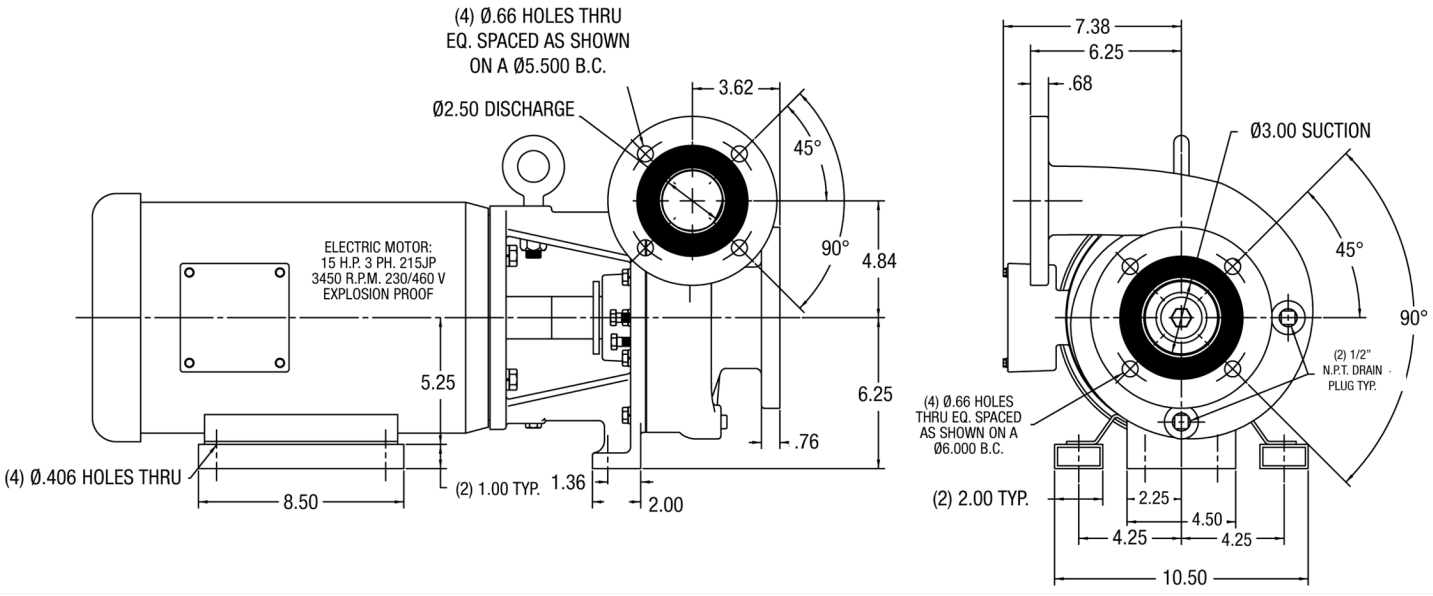

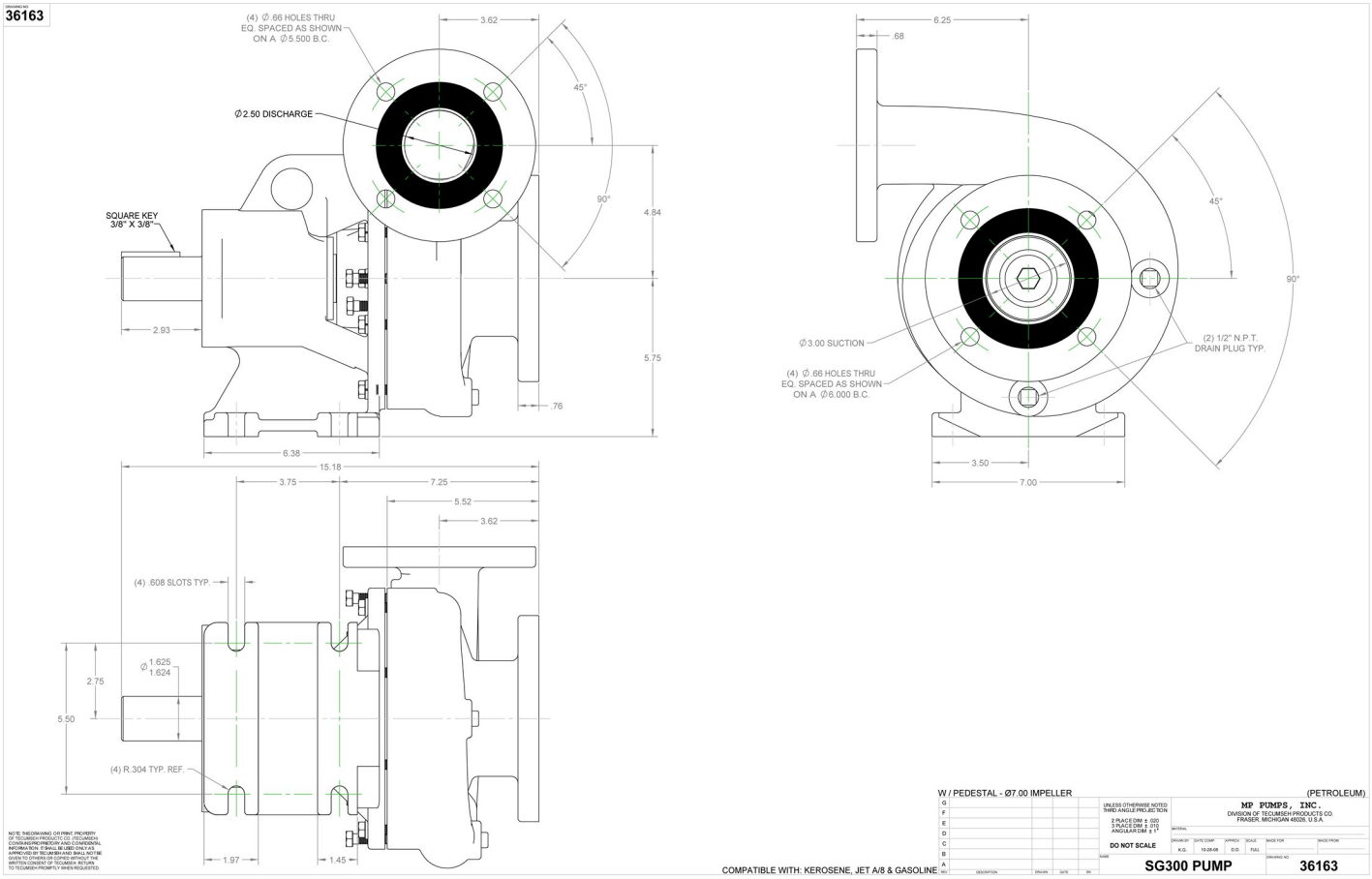

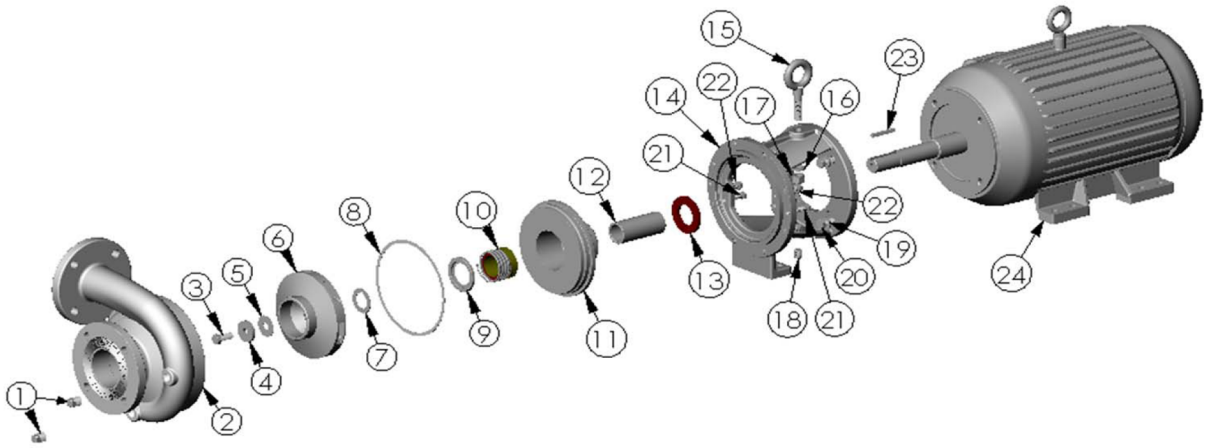

	ITEM NO.	PART NO.	DESCRIPTION	QTY.		ITEM NO.	PART NO.	DESCRIPTION	QTY.
	1	22656	PIPE PLUG - S.S.- 1/2" N.P.T.	2		13	26680	SLINGER - NEOPRENE	1
	2	26733	HOUSING - DUCTILE IRON	1		14	26739	ADAPTER - CAST IRON	1
	3	26674	SEAL BOLT - S.S. - 1/2-13	1		15	26686	EYE BOLT - STEEL	1
	4	26675	WASHER - S.S.	1		16	26258	LOCKWASHER - STEEL - 5/8"	1
*	5	36156	GASKET - KLINGERSIL - C-4433	1		17	22461	HEXNUT - STEEL - 5/8-11"	1
	6	26788	IMPELLER - CAST IRON - Ø7.00	1		18	21267	PIPE PLUG - S.S.- 1/4" N.P.T.	1
*	7	36157	GASKET - KLINGERSIL - C-4433	1		19	21254	LOCKWASHER - STEEL - 1/2"	4
*	8	26744	GASKET - KLINGERSIL - C-4433	1		20	21246	CAPSCREW - S.S. - 1/2-13	4
	9	26972	SPRING HOLDER - S.S.	1		21	21274	CAPSCREW - S.S. - 3/8-16	14
*	10	35711	SEAL - 1.75" TYPE 2 - NRS	1		22	21266	LOCKWASHER - STEEL - 3/8"	10
	11	26737	SEAL HOUSING - CAST IRON	1		23	26796	SQUARE KEY - S.S. - 1/4" X 1/4"	1
	12	26678	SHAFT SLEEVE - S.S.	1		24	26805	ELE. MTR. - 20 H.P. - 3 PH. - 256JP 3450 R.P.M. - T.E.F.C.	1

*- RECOMMENDED REPLACEMENT PARTS

34800 BENNETT - FRASER, MI 48026-1686
(586) 293-8240 - FAX (586) 293-8469
(800) 563-8006 - www.mppumps.com