CALL TOLL FREE 877-742-2878 FOR SALES AND SUPPORT
Return to BurtProcess.com

PETROLEUM 700

4" X 3" End Suction Centrifugal Pump

Specifically designed for transfer of petroleum based fluids, MP's Petroleum 700 series is available in three distinct models: SO 700, SG 700 and SE 700.

Designed to close-couple to 256JP frame electric motors, the models are also available as PumPAKs®. Additional mounting options include pedestal.

Pump rotation in 90° increments.

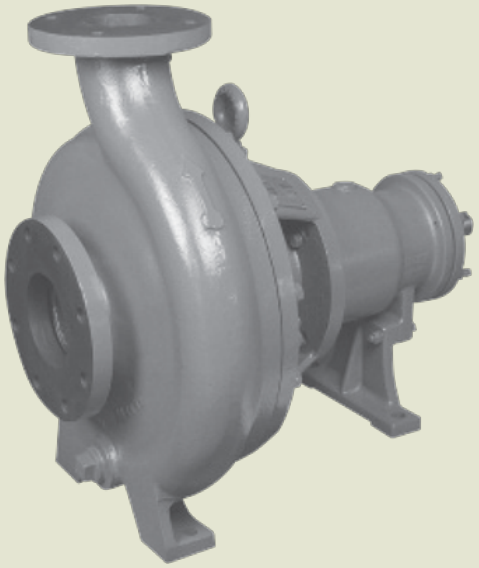

SPECIFICATIONS:

Suction And Discharge	4" x 3" 150# flange
Flow	Up to 925 GPM
Head Feet	Up to 170'
Impeller	SE 700 - enclosed cast iron, SG 700 - enclosed aluminum, SO 700 - enclosed cast iron
Motor	Up to 40 HP
Drive Options	Close coupled 256JP, Hydraulic motor 1.16 cu. in., Hydraulic motor 1.58 cu. in., Pedestal, PumPAK® (without motor)
Seal	SE 700 . . Type 2 viton/carbon/silicon carbide/SS, SG 700. . Type 2 viton/carbon/silicon carbide/SS, SO 700. . Type 21 viton/carbon/niresist/SS
Compatible For	SE 700 - Ethanol, E 85, SG 700 - Gasoline, Avgas, Kerosene, Jet A/8, SO 700 - Biodiesel, Fuel Oil, Diesel
Mounting Options	SE 700 - Explosion proof Class 1 Group D, SG 700 - Explosion proof Class 1 Group D, SO 700 - TEFC

Application

- Agricultural
- Industrial
- Marine
- OEM

Features

- Non-spark clamp

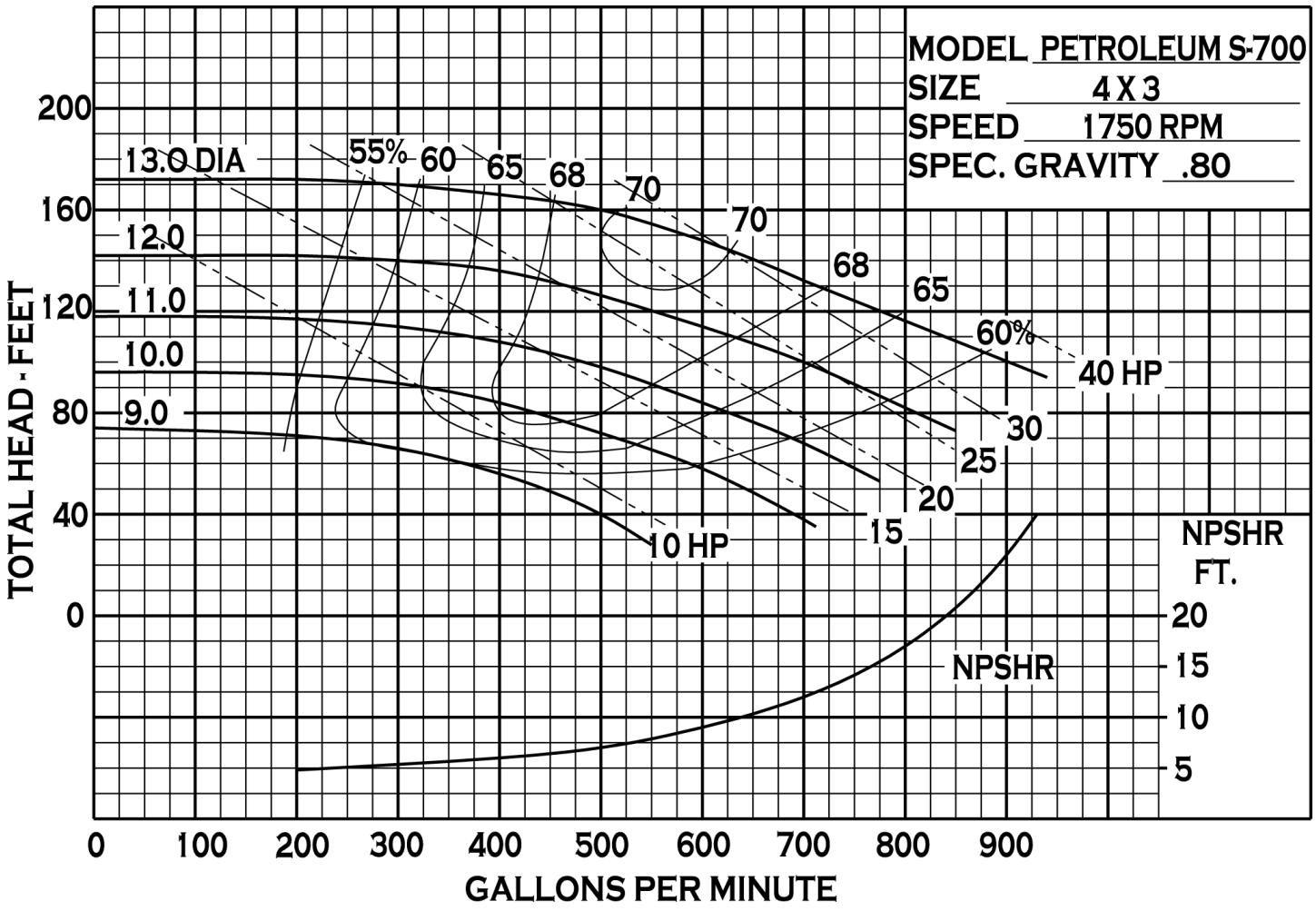

34800 BENNETT - FRASER, MI 48026-1686
(586) 293-8240 - FAX (586) 293-8469
(800) 563-8006 - www.mppumps.com

PEDESTAL-MOUNT

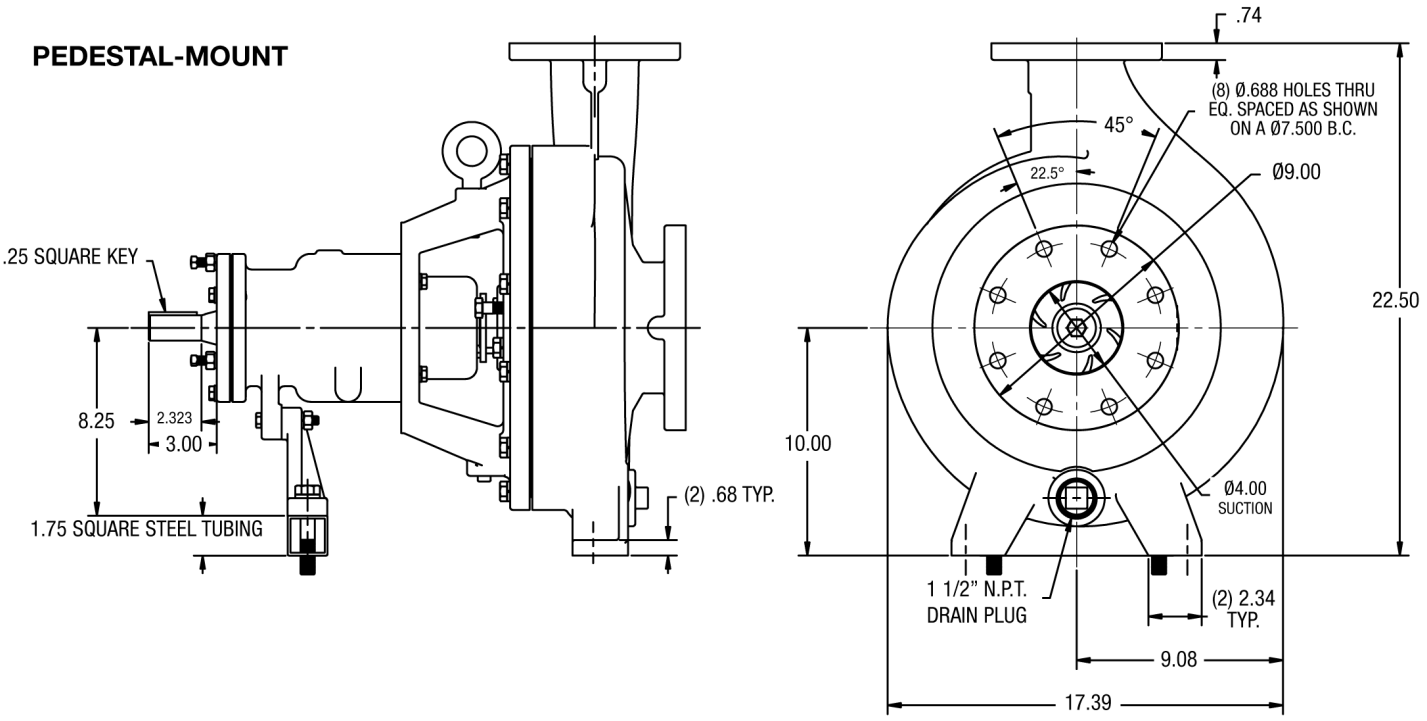

CLOSE COUPLED - ELECTRIC MOTOR

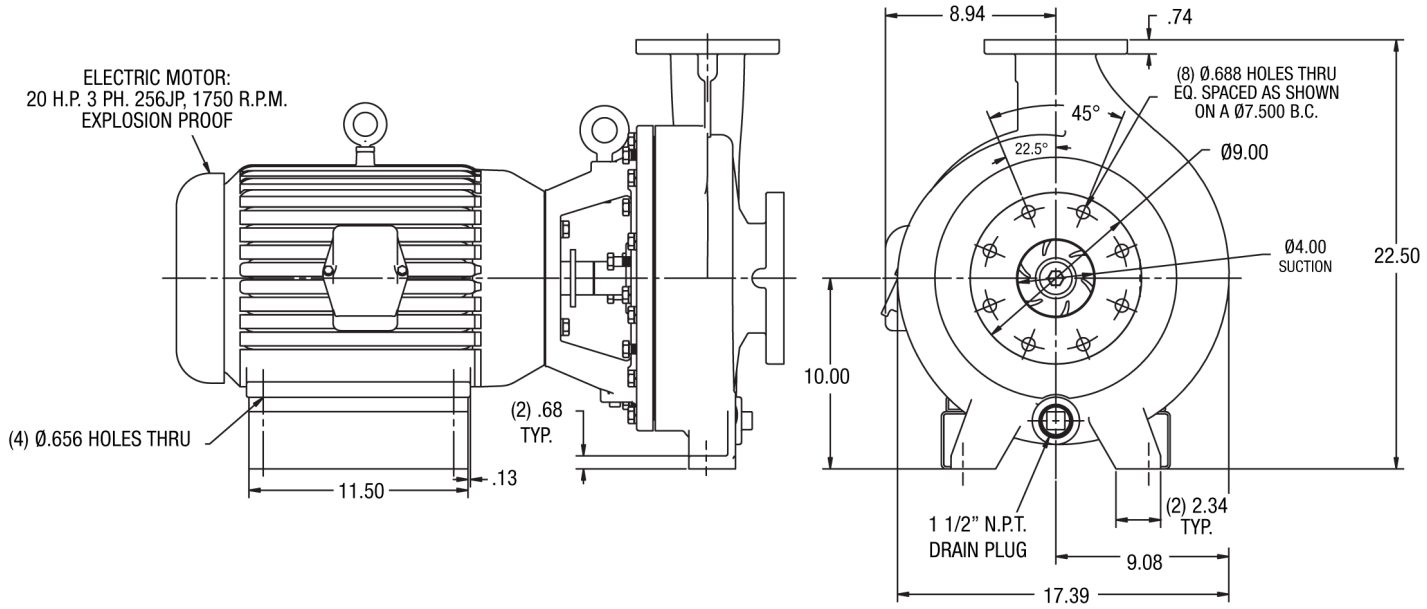

34800 BENNETT - FRASER, MI 48026-1686
(586) 293-8240 - FAX (586) 293-8469
(800) 563-8006 - www.mppumps.com

36211

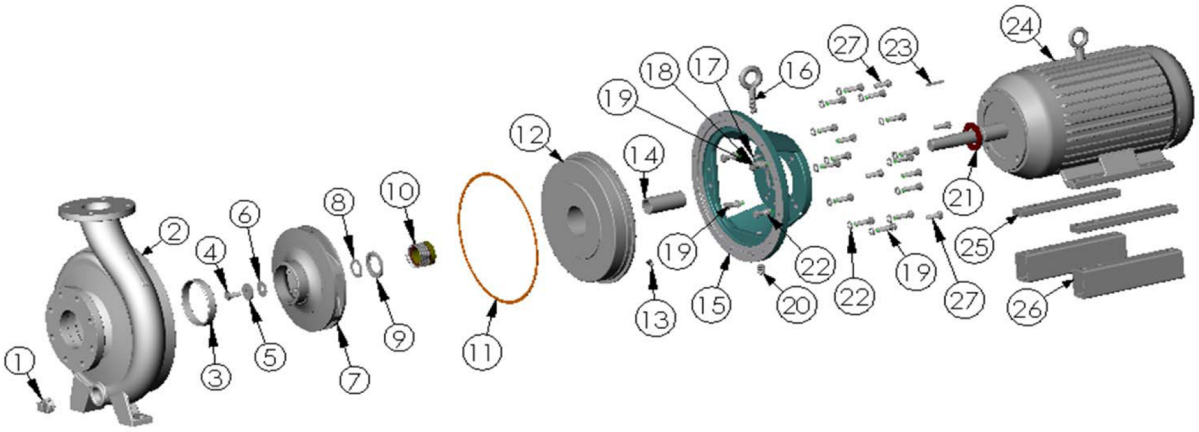

	ITEM NO.	PART NO.	DESCRIPTION	QTY.		ITEM NO.	PART NO.	DESCRIPTION	QTY.
	1	35710	PIPE PLUG - S.S.- 1 1/2" N.P.T.	1		14	26678	SLEEVE - S.S.	1
	2	27136	HOUSING - DUCTILE IRON	1		15	27134	ADAPTER - CAST IRON	1
*	3	26673	WEAR RING - STEEL	1		16	26686	EYE BOLT - STEEL - 5/8-11	1
	4	26674	SEAL BOLT - S.S. - 1/2-13	1		17	26258	LOCKWASHER - STEEL - 5/8"	1
	5	26675	WASHER - S.S.	1		18	22461	HEXNUT - STEEL - 5/8-11	1
*	6	36156	GASKET - KLINGERSIL - C-4433	1		19	27147	CAPSCREW - S.S. - 1/2-13 X 1 3/4	20
	7	27143	IMPELLER - DUCTILE IRON - Ø11.0	1		20	22656	PIPE PLUG - S.S. - 1/2" N.P.T.	1
*	8	36157	GASKET - KLINGERSIL - C-4433	1		21	22680	SLINGER - NEOPHRENE	1
	9	26972	SPRING HOLDER - S.S.	1		22	21254	LOCKWASHER - S.S. - 1/2"	22
*	10	35711	SEAL - Ø1.75 - T-2 - CAR / NRS / VITON	1		23	26796	SQUARE KEY - S.S. - 1/4 X 1/4 X 2 1/8	1
*	11	36188	GASKET - KLINGERSIL - C-4433	1		24	27221	EL. MTR. - 20 H.P. - 3PH. - 1800 RPM - 256JP - TEFC	1
	12	27155	SEAL ADAPTER - DUCTILE IRON	1		25	27307	SPACER - STEEL - 1 1/2 X 3/4 X 11 1/2	2
	13	21267	PIPE PLUG - S.S. - 1/4" N.P.T.	1		26	27306	SPACER - STEEL - 3 X 2 X 11 1/2	2
						27	27224	CAPSCREW - S.S. - 1/2-13 X 1 3/8	4

* RECOMMENDED REPLACEMENT PARTS

34800 BENNETT - FRASER, MI 48026-1686
(586) 293-8240 - FAX (586) 293-8469
(800) 563-8006 - www.mppumps.com