CALL TOLL FREE 877-742-2878 FOR SALES AND SUPPORT
Return to BurtProcess.com

PETROLEUM 80

1-1/2" X 1-1/4" End Suction Centrifugal Pump

Specifically designed for petroleum based fluids, MP's Petroleum 80 series is available in three distinct models: SO 80, SG 80 and SE 80.

Designed to close-couple to 56C and145TC frame electric motors, the models are also available as PumPAKs®. Additional mounting options include pedestal.

Pump rotation in 90° increments.

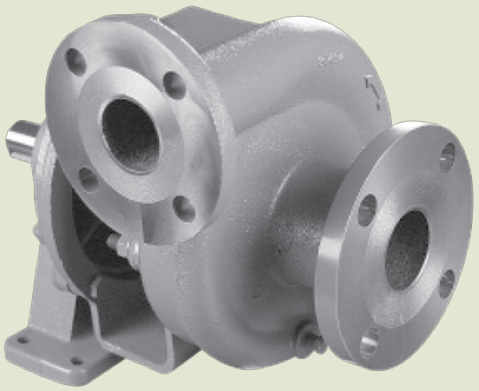

SPECIFICATIONS:

Suction And Discharge	1 1 /2" x 1 1 /4" 150# flange
Flow	Up to 80 GPM
Head Feet	Up to 139'
Impeller	SE 80 - enclosed cast iron, SG 80 - enclosed aluminum, SO 80 - enclosed cast iron
Motor	Up to 3 HP
Drive Options	Close coupled 56C or 145TC, Hydraulic motor .37 cu. in., Hydraulic motor .45 cu. in., Hydraulic motor .58 cu. in., Pedestal, PumPAK® (without motor)
Seal	SE 80 . . . Type 2 viton/carbon/silicon carbide/SS, SG 80. . . Type 2 viton/carbon/silicon carbide/SS, SO 80. . . Type 21 viton/carbon/niresist/SS
Compatible For	SE 80 - Ethanol, E 85, SG 80 - Gasoline, Avgas, Jet A/8, SO 80 - Biodiesel, Fuel Oil, Diesel
Mounting Options	SE 80 - Explosion proof Class 1 Group D, SG 80 - Explosion proof Class 1 Group D, SO 80 - TEFC

Application

- Agricultural
- Industrial
- Marine
- OEM

Features

- Non-spark clamp

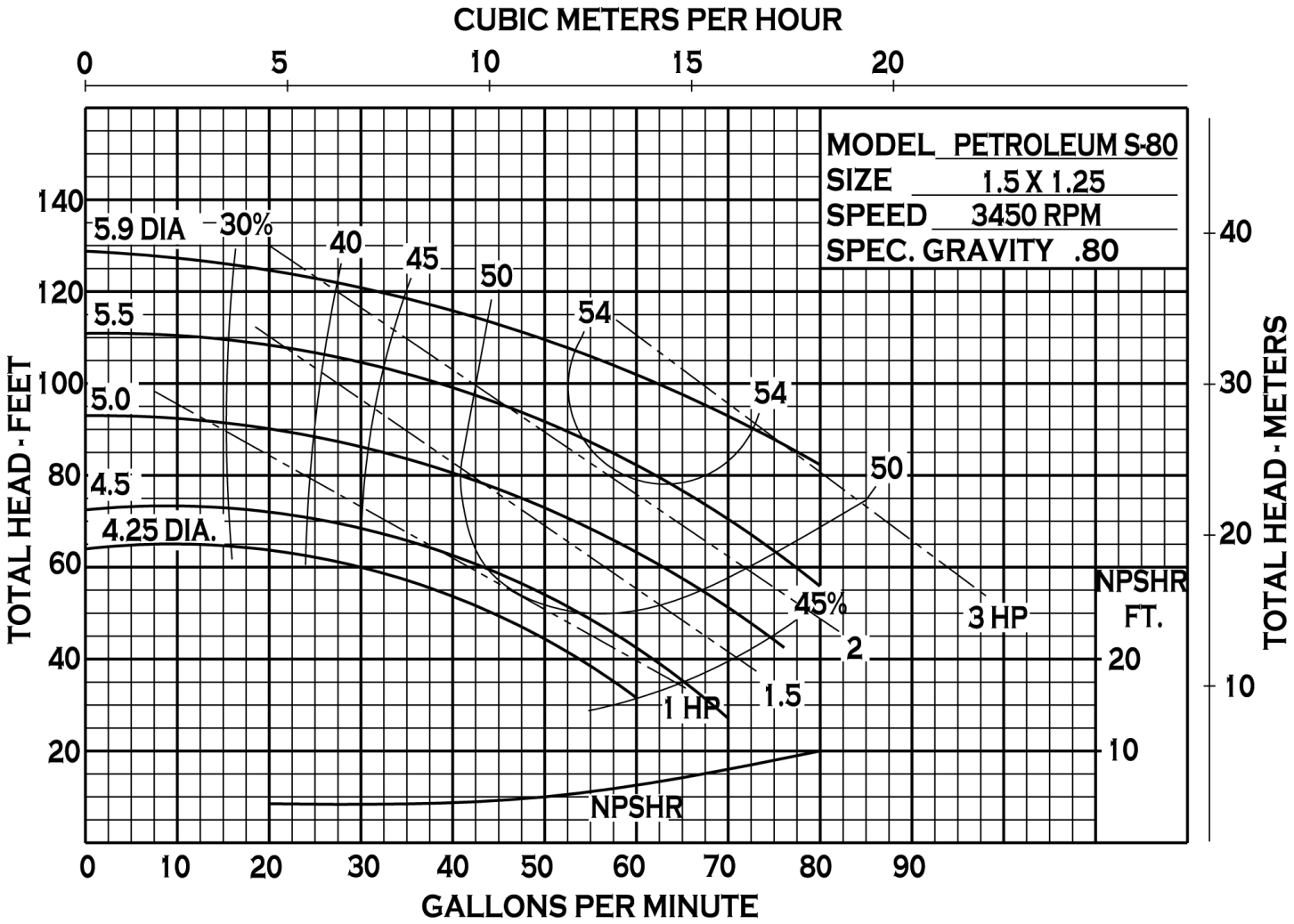

34800 BENNETT - FRASER, MI 48026-1686
(586) 293-8240 - FAX (586) 293-8469
(800) 563-8006 - www.mppumps.com

PEDESTAL-MOUNT

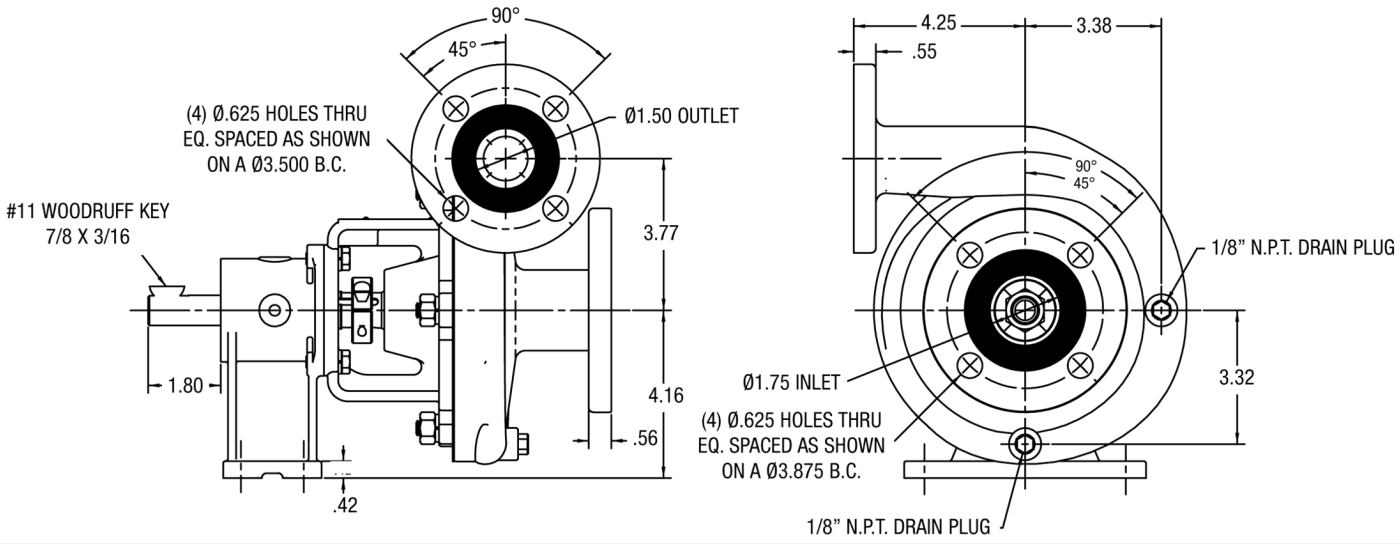

CLOSE COUPLED - ELECTRIC MOTOR

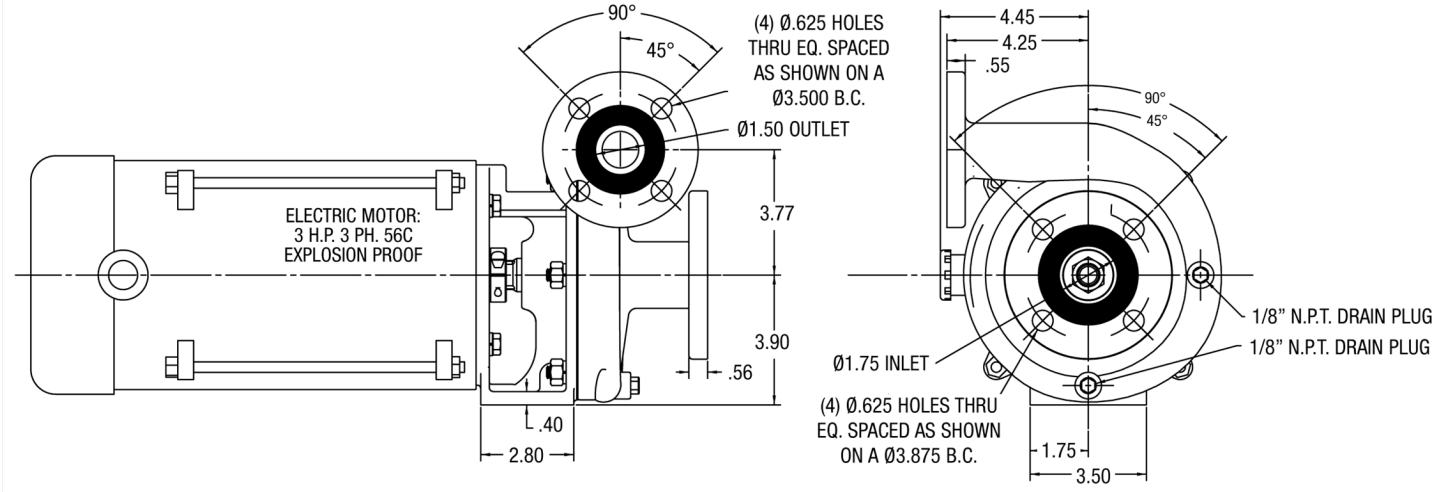

CLOSE COUPLED - ELECTRIC MOTOR

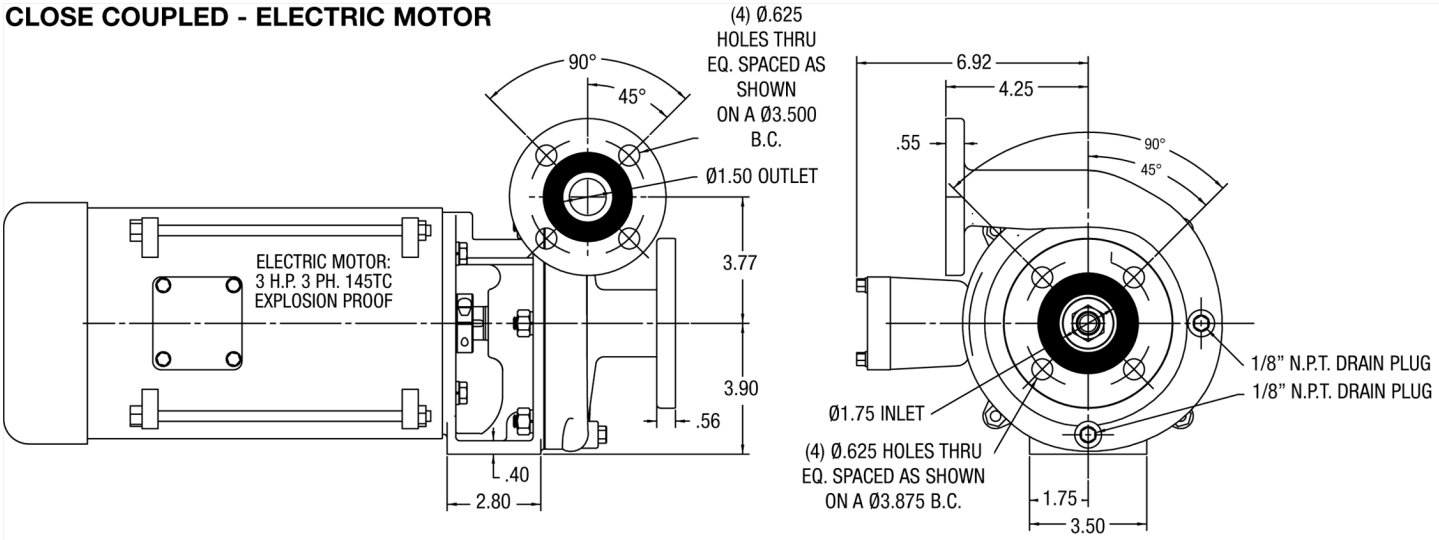

34800 BENNETT - FRASER, MI 48026-1686
(586) 293-8240 - FAX (586) 293-8469
(800) 563-8006 - www.mppumps.com

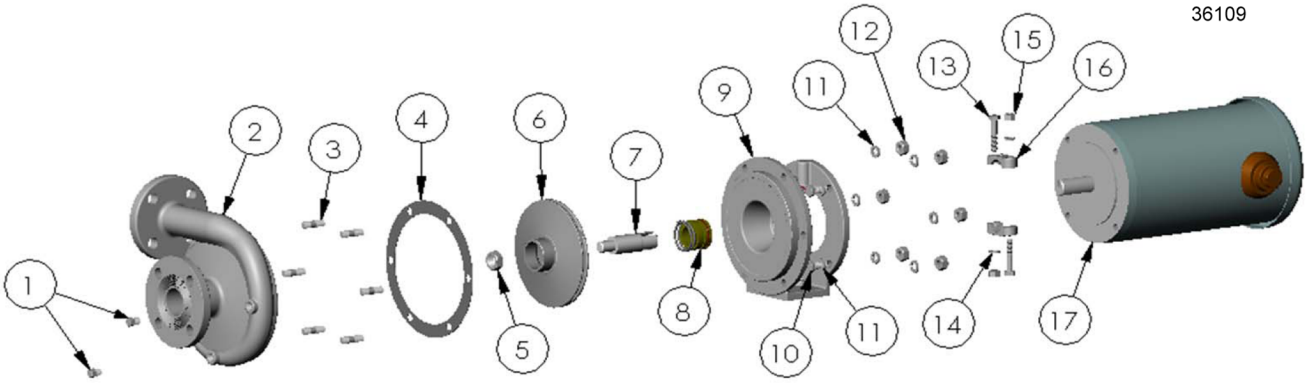

ITEM NO.	PART NO.	DESCRIPTION	QTY.		ITEM NO.	PART NO.	DESCRIPTION	QTY.
1	21255	PIPE PLUG - S.S.- 1/8" N.P.T.	2		9	25332	ADAPTOR - CAST IRON	1
2	31871	HOUSING - DUCTILE IRON	1		10	21251	CAPSCREW - S.S. - 3/8-16 X .88"	4
3	21260	STUD - S.S. - 3/8-16 X 1.32"	6		11	21266	LOCKWASHER - S.S. - 3/8"	10
* 4	25662	GASKET - KLINGERSIL	1		12	21268	HEXNUT - S.S. - 3/8-16"	6
5	22655	HEX JAM NUT - S.S. - 5/8-18	1		13	21264	CAPSCREW - S.S. - 5/16 X 18 X 1.75"	2
6	25910	IMPELLER - CAST IRON - Ø5.90	1		14	21238	LOCKWASHER - S.S. - 5/16"	2
7	25664	DRIVE SLEEVE - S.S. - 7/8"	1		15	21284	HEXNUT - S.S. - 5/16-18"	2
* 8	25460	SEAL T-21 - 1.0" N.R.S.	1		16	21954	CLAMP - S.S. - 7/8" - S.L.	2
					17	25920	ELEC. MTR. - 3 H.P. 3 PH. 145TC TEFC	1

*- RECOMMENDED REPLACEMENT PARTS

34800 BENNETT - FRASER, MI 48026-1686
(586) 293-8240 - FAX (586) 293-8469
(800) 563-8006 - www.mppumps.com