PLAST-O-MATIC

PRODUCT DATA

SERIES EASMT/EASYMT
PTFE BELLOWS SOLENOID VALVE
PREVENTS FUGITIVE EMISSION LEAKS
ONE VALVE HANDLES ALL TYPE SOLUTIONS!



TECHNOLOGICAL AND ENGINEERING BREAKTHROUGH...

A single thermoplastic valve, designed for severe service applications with virtually every type of liquid. For pressure, drain or vacuum service. Sizes: 1/4" to 1".

FEATURES

- **Unique Design:** PTFE Bellows barrier-type dynamic seal prevents leaking of fugitive emissions to the atmosphere.
- **Versatility:** For use with virtually every type solution, including acids, caustics, solvents, chlorine solutions and ultra-pure liquids.
- **Superior Performance:** Over 2 million cycles in laboratory conditions.
- **Dependability and Safety:** Patented Fail Dry® design provides visual warning if seal malfunctions. Avoids costly shutdown, as valve continues to function.
- **New W24 Solenoid Coil:** with Z-Cool DIN Connector uses a fraction of the energy required by traditional coils. Optional R24 coil available for intermittent service.
- **Rated Continuous Duty:** with maximum ambient temperature of 122°F/50°C.
- **Coil Connector Light:** Indicates when valve is energized (open). Standard on W24 coil.
- **Corrosion Resistant:** Rugged thermoplastic construction is resistant to both internal and atmospheric corrosion. no metal parts in wetted areas.
- **Exacting Quality:** All valves individually inspected and 100% tested to insure reliable operation.

DESIGN AND OPERATION

Valves are spring return normally-closed and direct-acting with a simple push-pull plunger design. There is no minimum pressure required for operation. The PTFE bellows shaft seal eliminates the need for an elastomer seal which can weaken as a result of chemical attack. The PTFE bellows assures smooth, non-sticking operation and exceptionally long cycle life; over 2 million in laboratory conditions. The bellows design also allows a stock valve to be used for vacuum or pressure. The poppet seat ensures bubble-tight shutoff.

MATERIALS OF CONSTRUCTION

Bodies: Series EASYMT and EASMT molded bodies are available in Geon® PVC, Corzan® CPVC, glass-filled polypropylene and Kynar® PVDF. Some components in glass-filled polypropylene models are made of Kynar PVDF.

Seals: Standard seal material is a special treated Viton® FKM. With this material, a single valve can handle virtually all types of solutions including acids, caustics, solvents, chlorine solutions and ultra-pure liquids. Multi-purpose capability results in significant convenience and cost efficiency, since only one valve is needed for inventory.

CE MARKED

1384 Pompton Avenue, Cedar Grove, NJ 07009 USA (973) 256-3000 • Fax (973) 256-4745 • www.plastomatic.com

ISO9001:2015 REGISTERED COMPANY

PRESSURE RATING & FLOW RATE CONSIDERATIONS FOR ALL MODELS

Inlet Pressure: Inlet pressure ratings in the tables below are at full rated line voltage for alternating current (A.C.) or direct current (D.C.) If rated pressures are exceeded the valve will not open.

Back Pressure: An important consideration in solenoid valve selection is the back pressure rating shown in the specifications table below. Back pressure is caused by the resistance to flow in the piping downstream of the valve. Nozzles, goosenecks, fittings, tubing, or reduced outlet piping all create restrictions that raise the back pressure. Excessive back pressure will cause a valve to remain open when power is shut off. A second type of back pressure is that which comes from a separate pressure source downstream of the valve. This could be head pressure from a storage tank or pressure from another pump, etc. Plast-O-Matic solenoid valves will not stay closed if the back pressure is higher than the inlet pressure. ***Back pressure or downstream pressure is the most common cause of solenoid valve problems during system start-up. Therefore, sources of potential backpressure must be considered during the planning stages of a piping system.***

1. Valves in above chart are rated for full vacuum of 30" of mercury (Hg) except for 1" sizes which are rated for 15" of mercury (Hg) maximum.
2. The 24 watt coils are rated continuous duty. See Coil Specifications on page 4 for complete details.
3. W24 includes 18" lead; connector must not be separated from coil. R24 includes DIN connector only; no leads.

SPECIFICATIONS

Pipe Size	Orifice Size In.	Orifice Size mm	Watts	Cv	AC or DC COILS Max. Inlet Pressure PSI	Max. Inlet Pressure BARS	Max. Back Pressure PSI	Max. Back Pressure BARS	Model Prefix
1/4	.375	9,5	24	1.2	140	9,5	38	2,6	EASYMT
1/2	.375	9,5	24	1.2	140	9,5	38	2,6	
1/2	.375	9,5	24	2.0	125	8,5	18	1,2	EASMT
3/4	.470	12,7	24	3.2	58	3,9	17	1,1	
1	.656	16,7	24	4.2	15	1,0	12	0,8	
1**	.452	11,5	24	3.2	25	1,7	12	0,8	

**This is an optional version of the 1" valve, where the design has been modified to allow higher inlet pressure at the sacrifice of lower Cv.

The pressure ratings shown in the table above are maximum values. The valve will open at the maximum listed inlet pressure and it will close at the maximum listed back pressure. The valve may not operate properly, however, when the maximum inlet and back pressure values are experienced at the same time. The governing parameter is velocity in feet per second (ft/sec) through the valve. Velocity is determined by pipe size and flow rate. To determine if your application exceeds the velocity tolerances for this valve, refer to the chart at right.

If your flow rate (in Gallons per Minute or Liters per Minute) is below 5 ft/sec column for your pipe size, the velocity is within plastic piping industry standards and the valve will function properly.

If your flow rate indicates a velocity above the accepted standard of 5 ft/sec but less than 10 ft/sec, Plast-O-Matic does not guarantee proper operation. The valve may still function, but if it emits a chattering sound, discontinue use. At flow above 5 ft/sec you must consider water hammer in the system design.

If your flow rate is higher than that listed in the 10 ft/sec column for your pipe, this valve must not be used in your application.

FLOW RATE AND EQUIVALENT VELOCITY

Valve Pipe Size NPT / BSP		Flow Rate At 5 feet per second velocity		Flow Rate At 10 ft. per second velocity	
0.50"	1/2 in.	3.4 G.P.M.	12.9 L.P.M.	6.8 G.P.M.	25.7 L.P.M
0.75"	3/4 in.	6.4 G.P.M.	24.2 L.P.M.	12.8 G.P.M.	48.5 L.P.M.
1.00"	1 in.	10.8 G.P.M.	40.9 L.P.M.	21.6 G.P.M.	81.8 L.P.M.

The following chart above is to provide overall guidelines on various thermoplastics relative to their pressure and temperature relationships. The information should be used to determine limitations of the various materials rather than selection of a specific valve since each individual valve model has its own pressure ratings. See specifications table below.

MATERIAL TEMPERATURE vs. PRESSURE

Material	Maximum Temperature Rating		MAXIMUM INLET PRESSURE AND TEMPERATURE 75°F PSI	24°C BARS	110°F PSI	43°C BARS	140°F PSI	60°C BARS	180°F PSI	82°C BARS	220°F PSI	105°C BARS	240°F PSI	116°C BARS	284°F PSI	140°C BARS
PVC	140°F	(60°C)	140	9,6	100	6.8	40	2,7	N.R.	N.R	N.R.	N.R	N.R.	N.R	N.R.	N.R
CPVC	180°F	(82°C)	140	9,6	100	6,8	80	5,4	40	2,7	N.R.	N.R	N.R.	N.R	N.R.	N.R
PP**	220°F	(105°C)	140	9,6	120	8,2	100	6,8	80	5,4	40	2,7	N.R.	N.R	N.R.	N.R
PVDF	284°F	(140°C)	140	9,6	130	8,8	120	8,2	100	6,8	60	4,1	30	2,0	10	0,7

1384 Pompton Avenue, Cedar Grove, NJ 07009 USA (973) 256-3000 • Fax (973) 256-4745 • www.plastomatic.com

ISO9001:2015 REGISTERED COMPANY

APPLICATION • DESIGN • OPERATION

Application: PTFE bellows solenoid valves automatically shutoff flow of highly corrosive or ultra-pure liquids. They can handle pressure, drain or vacuum applications and do not require pressure to aid in opening the valve.

Design and Operation: Valves are spring return normally-closed and direct-acting with a simple push-pull plunger design. There is no minimum pressure required for operation. The PTFE bellows shaft seal eliminates the need for an elastomer seal which can weaken as a result of chemical attack. The PTFE bellows assures smooth, non-sticking operation and exceptionally long cycle life; over 2 million in laboratory conditions. The bellows design also allows a stock valve to be used for vacuum or pressure. The poppet seat ensures bubble-tight shutoff.

Fail Dry® Safety Design: Unique protection is provided by Plast-O-Matic's patented Fail-Dry design which incorporates a vented chamber and a secondary back-up diaphragm to handle any unusual seal failure occurrence. The Fail-Dry safety feature provides visual warning of seal malfunction and permits the valve to continue operating until a scheduled maintenance can be planned thereby avoiding a costly shutdown.

Vacuum Information: PTFE Bellows solenoid valves are rated for full vacuum of 30" of mercury except for 1" sizes, which are rated for a vacuum of 15" of mercury.

CAUTION: Not recommended for use with pressurized dry chlorine; vacuum to 30 Hg only.

Please specify "chlorine-vacuum" when ordering.

PTFE Bellows Assembly

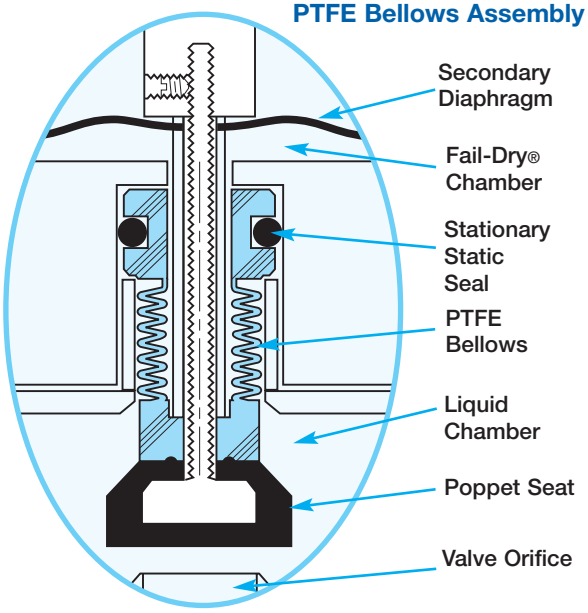

DIMENSIONS

SOLENOID VALVE BODY DIMENSIONS

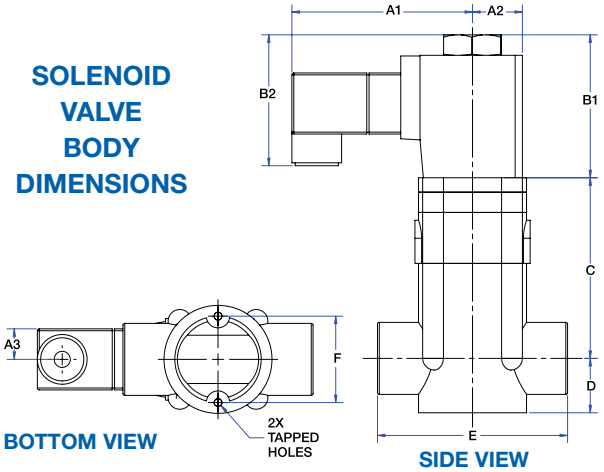

SOLENOID COIL HOUSINGS

Coil Type	A_1	A_2	A_3	B_1	B_2
	In. mm	In. mm	In. mm	In. mm	In. mm
W24 IP 65	3.25 83	.80 20	.70 18	2.7 69	3.0 75
R24 IP 65	2.65 67	.80 20	.70 18	2.7 69	.30 75

MOLDED VALVE BODIES – SERIES EASYMT & EASMT

Pipe Size	C	D	E	F†	G
	In. mm	In. mm	In. mm	In. mm	Thread Size
1/4" & 1/2"	2.9 73	.94 24	3.3 84	1.5 38	8-32 x 1/2 deep
3/4" & 1"	3.3 84	1.3 33	4.0 102	1.5 38	8-32 x 1/2 deep

† Dimension is from center to center of mounting holes

PART NUMBERS:

EASMT | **4** | **V** | **12** | **W24** — **120/60** — **PV**

Model EASMT

Pipe Size
4 – 1/2"
5 – 3/4"
6 – 1"

Seals
V – Viton
EP - EPDM

Orifice Size
12 – 3/8" (Only)
14 – Modified orifice (1" Only)
16 – 1/2" (3/4" Only)
22 – 1-1/16" (1" Only)

Connector
W – Z-Cool Connector
R- Rectified Connector

Coil Voltage
024/60 – 24V AC, 60Hz
024DC – 24V DC
120/60 – 120V AC, 60Hz
240/60 – 240V AC, 60Hz

Material
PV – PVC
CP- CPVC
PP – Glass-filled PolyPropylene
PF – PVDF

EASYMT | **2** | **V** | **12** | **W24** — **120/60** — **PV**

Model EASYMT

Pipe Size
2 – 1/4"
4 – 1/2"

Seals
V – Viton
EP - EPDM

Orifice Size
12 – 3/8"

Connector
W – Z-Cool Connector
R- Rectified Connector

Coil Voltage
024/60 – 24V AC, 60Hz
024DC – 24V DC
120/60 – 120V AC, 60Hz
240/60 – 240V AC, 60Hz

Material
PV – PVC
CP- CPVC
PP – Glass-filled PolyPropylene
PF – PVDF

1384 Pompton Avenue, Cedar Grove, NJ 07009 USA (973) 256-3000 • Fax (973) 256-4745 • www.plastomatic.com

ISO9001:2015 REGISTERED COMPANY

TECHNICAL INFORMATION

General Information: A solenoid is an electro-mechanical device used to control the opening and closing of a valve. The solenoid consists of several parts; the coil, the plunger (core), the core tube, gaskets, cap nut, spring. Energizing the coil creates a magnetic field which, in a normally closed valve, lifts the disc off of the seat thus opening the valve. In a normally open valve, the solenoid closes the valve when energized. When de-energized a spring returns the valve to its normal position. The action takes about 1/10 of a second. Because they respond to energization so quickly, solenoid valves can cause water hammer, so it is important to consider and address this when designing your system.

Solenoid Description: The model W24 solenoids consume 24 watts when energized, but because of the Z-Cool connector (valve will not operate without fully assembled coil/connector), the wattage drops to about 1/4 of that value after about 100 milliseconds. A solenoid does not need full power once the valve has changed its position (actuated), and in normal solenoids, once the valve has actuated if it is allowed to remain at full power, that excess energy is wasted in heat. The W24 coil/Z-Cool DIN reduces the energy consumption to about 1/4 of typical solenoids, and increases the ambient temperature rating.

Solenoid Selection: The model W24 and R24 solenoids are available in AC voltages of 24, 110/120, and 230/240. They will operate at any frequency, i.e. 50 or 60 Hz is acceptable. In DC voltage they are available in 24 volts.

Duty Cycle: All model W24 solenoids are rated at 100% duty cycle at ambient temperatures up to 50°C (122°F). They can be left energized indefinitely (many years) without harm to the solenoid or valve. They can also be rapidly cycled. If used at higher ambient temperatures, they must be rated "intermittent". Because there are infinite temperatures, it is not practical to outline the intermittent conditions in this instruction. For particular circumstances it may be advisable to consult the factory or run tests. The solenoid enclosures are rated IP65, safe for outdoor use. Please refer to IP65 specification for specific environmental conditions.

Connector: The W24 will not function properly without the Z-Cool DIN connector. Warranty is voided if W24 used without Z-Cool. May be removed temporarily to re-orient direction of wire leads. The wire leads are shipped oriented in a "down" or 6:00 position. The Z-Cool connector can be removed and re-oriented 180° so that direction of wire leads is in an "up" or 12:00 position. Wire direction can only be in these two positions; connector contacts will not align otherwise. After removal and re-orientation of connector, it must be re-tightened immediately.

W24 Caution: Do not remove W24 Z-Cool connector other than to re-orient wire direction. Do not use any other DIN connector. Do not wire directly to W24 coil contacts. Wiring to W24 coil contacts represents negligence and guarantee is void.

Optional R24 (24 watt) coil is equipped with a rectified 1/2" DIN connection in place of wire leads. Coil assembly is IP65 rated but does not included the advantages of the Z-Cool Connector: It is continuous duty with a reduced ambient temperature rating, operates with a higher surface temperature, and does not include the running light. R24 provides a lower initial cost, but higher operating cost due to increased energy use. It is best suited for applications requiring periodic energization.

SPECIFICATIONS

STYLE **W24**
24 Watt Class "H" Coils
Continuous Duty



CE

- CORROSION RESISTANT
- CONTINUOUS DUTY
- SAFE OPERATING TEMP.
- IP65 ENCLOSURE



STYLE **R24**
24 Watt Class "H" Coils
Continuous Duty

W 24

Insulation Class	H
Watts (maximum)	24 (watts drop to approx. 6 watts after initially energized)
Duty Cycle	100% (may be energized indefinitely, or rapid on/off cycling is acceptable)
Max. Ambient Temp.	122°F (50°C)
Voltage Tolerance	10% above or below rated voltage.
Current (amps)	See table.
Enclosure Rating	IP65
Wire Leads	18"
Surface temperature	Maximum of 120°F (48°C) @ 70°F (23°C) ambient.

R 24

Insulation Class	H
Watts (maximum)	24
Duty Cycle	100% (may be energized indefinitely, or rapid on/off cycling is acceptable)
Max. Ambient Temp.	122°F (50°C)
Voltage Tolerance	10% above or below rated voltage.
Current (amps)	See table.
Enclosure Rating	IP65
DIN Connection	1/2" NPT
Surface temperature	Maximum of 220°F (104°C) @ 70°F (23°C) ambient.

W 24

Coil Voltage	Maximum Current (Less Than 1 Second)	Holding Current
230/240 AC	0.15	0.03
24 AC	0.85	0.22
110/120 AC	0.22	0.06
24 DC	1.1	0.3

AC coils will operate at 50 or 60 Hz.

R 24

Coil Voltage	Maximum Current
230/240 AC	0.12
24 AC	1.1
110/120 AC	0.22
24 DC	1.1

AC coils will operate at 50 or 60 Hz.

Photos are representative. Appearance may vary based on size/material.

MSVT-0319-C-4