PLAST-O-MATIC®

PRODUCT DATA

SERIES RVT RELIEF VALVE

ANGLE PATTERN VALVE WITH HIGH PRESSURE AND FLOW RATES



Set Pressure Range: 5-125 PSI / .34-8.6 BAR
Maximum Inlet Pressure: 150 PSI / 10.3 BAR
For higher pressures, consult factory.

FEATURES:

- PTFE shaft prevents chatter and sticking.
- Triple U-cup seal isolates spring, provides added safety.
- Patented Fail-Dry® advance warning vent allows maintenance to be scheduled conveniently, without costly shut-down.
- Angle pattern offers compact size and convenient piping.
- 1/2" through 2" pipe sizes; CPVC 3/4 through 2".
- No wetted metal parts.

DESIGN:

Series RVT angle pattern pressure relief valve features a solid, non-sticking PTFE shaft passing through three U-cup seals. It is a proven, high performance relief valve providing rugged dependability for acids and other highly corrosive liquids. Relief setting is infinitely adjustable from 5 psi to 125 psi. Maximum inlet pressure is 150 psi. Not recommended for salt solutions and other liquids that can crystallize.

MATERIALS OF CONSTRUCTION:

Available in PVC, CPVC, Natural Polypropylene, PVDF and PTFE. Seals are available in EPDM or FKM (Viton®). For alternate body or seal materials, consult factory. The adjusting bolt, lock nut and fasteners are stainless steel. The control spring is plated steel. No metal parts are in contact with liquid.

1384 Pompton Avenue, Cedar Grove, NJ 07009 USA (973) 256-3000 • Fax (973) 256-4745 • www.plastomatic.com

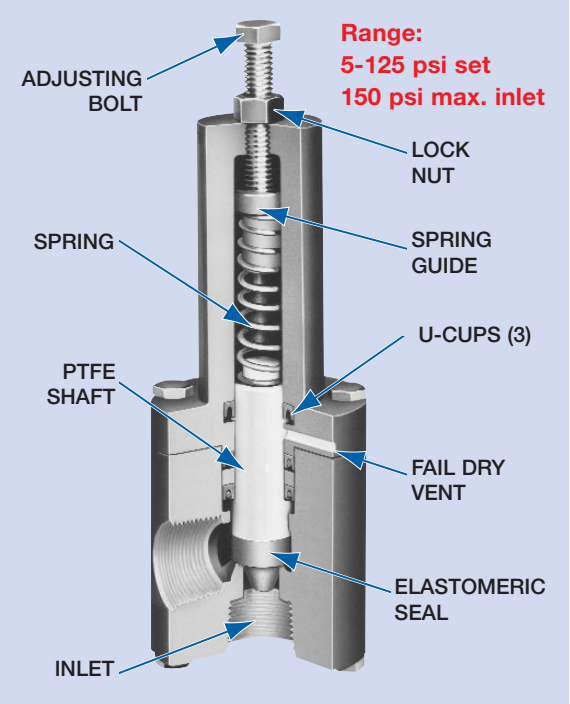

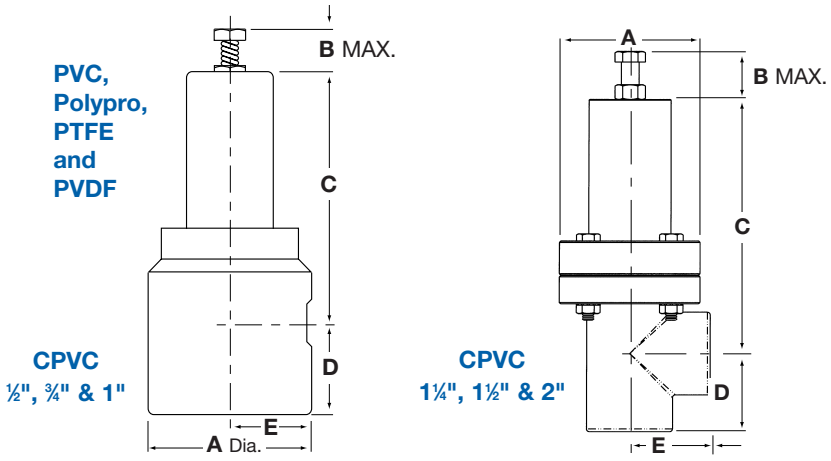

Series RVT Dimensions

NPT or BSP	A		B		C		D		E	
	in.	mm.	in.	mm.	in.	mm.	in.	mm.	in.	mm.
For PVC (PV), Polypro (PP), PTFE (TF), PVDF (PF) Bodies										
1/2	2.5	63.0	1	55.0	5	127.0	1.25	31.0	1.25	31.0
3/4	3	7.60	2.25	57.0	5.375	137.0	1.25	31.0	1.5	38.0
1	3	76.0	2.25	57.0	5.562	141.0	2	51.0	1.5	38.0
1 1/4	4	101.6	2.5	63.5	7.625	193.6	2	50.8	2	50.8
1 1/2	4.5	114.0	3.875	98.0	7.125	181.0	2.25	57.0	2.25	57.0
2	5.5	140.0	3.875	98.0	8.5	216.0	2.625	67.0	2.75	70.0
CPVC Body - For 1/2", 3/4", and 1" refer to above										
1 1/4	3.5	88.9	2.5	63.5	7.625	193.6	2	50.8	2	50.8
1 1/2	3.75	95.2	2	50.8	7	177.8	2.187	53.9	2.125	53.9
2	4.25	109.7	3.25	82.5	8.5	215.9	2.5	61.2	2.25	57.1

Series RVT Model Numbers

PIPE SIZE	PVC* Model No.	POLYPRO Model No.	PVDF Model No.	PTFE Model No.
1/2	RVT050V-PV	RVT050V-PP	RVT050V-PF	RVT050V-TF
3/4	RVT075V-PV	RVT075V-PP	RVT075V-PF	RVT075V-TF
1	RVT100V-PV	RVT100V-PP	RVT100V-PF	RVT100V-TF
1 1/4	RVT125V-PV	N/A	N/A	N/A
1 1/2	RVT150V-PV	RVT150V-PP	RVT150V-PF	RVT150V-TF
2	RVT200V-PV	RVT200V-PP	RVT200V-PF	RVT200V-TF

* For CPVC change -PV to -CP. CPVC not available in 1/2" size.

Series RVT 1/2", 3/4" and 1" Flow Characteristics

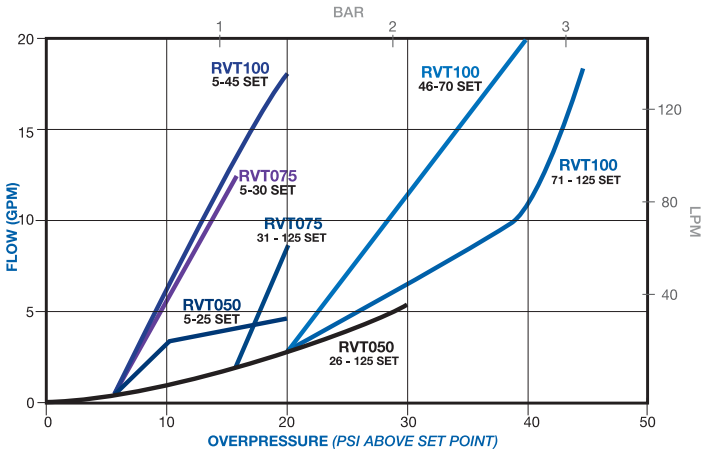

Series RVT 1¼", 1½" and 2" Flow Characteristics

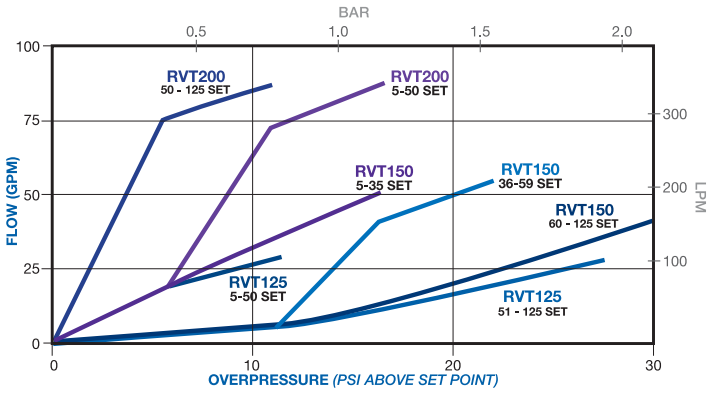

1384 Pompton Avenue, Cedar Grove, NJ 07009 USA (973) 256-3000 • Fax (973) 256-4745 • www.plastomatic.com