S10 NON-METALLIC PUMP TECHNICAL DATA SHEET

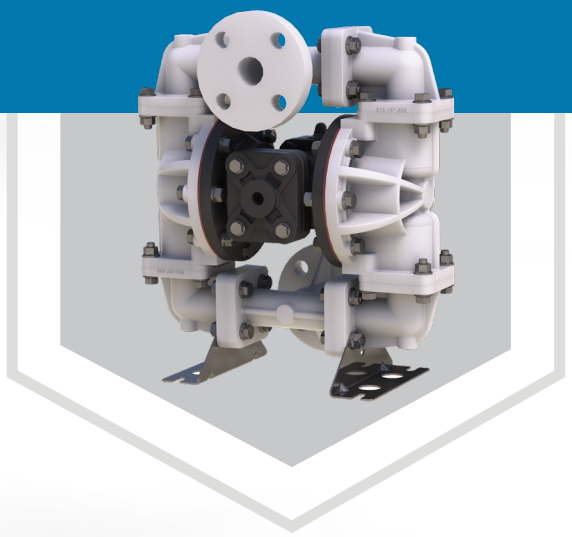

SERIES

STANDARD DUTY BALL VALVE PUMPS

Offering the widest range of performance and application capabilities

PERFORMANCE

SUCTION / DISCHARGE PORT SIZE

- 1" ANSI Flange

CAPACITY

- 0 to 23 gallons per minute (0 to 87 liters per minute)

AIR DISTRIBUTION VALVE

- No-lube, no-stall design

SOLIDS-HANDLING

- Up to .15 in. (4 mm)

HEADS UP TO

- 100 psi or 231 ft. of water (7 bar or 70 meters)

MAXIMUM OPERATING PRESSURE

- 100 psi (7 bar)

DISPLACEMENT/STROKE

- .26 Gallon / .098 liter

WEIGHTS

- PVDF 23 lbs. (10kg)
- Polypropylene 19 lbs. (9kg)
- Nylon 20 lbs. (9kg)

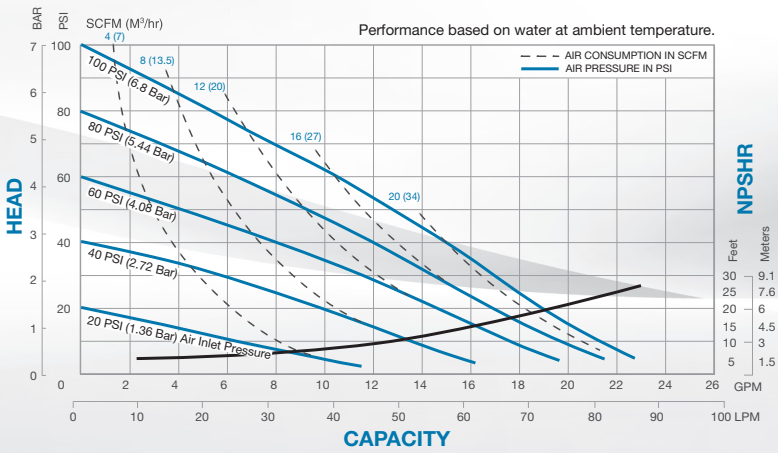

DIMENSIONS

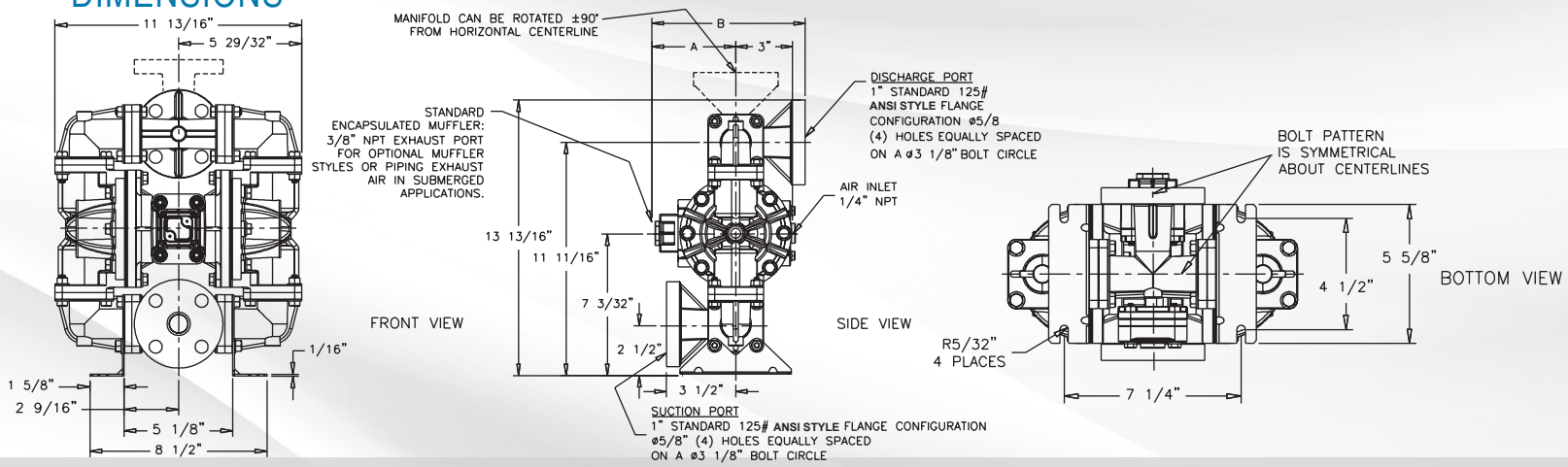

5 YEAR LIMITED PRODUCT WARRANTY

5 Year Guarantee for defects in material or workmanship. See sandpiperpump.com/content/warranty-certifications for complete warranty, including terms and conditions, limitations and exclusions.

USE ONLY GENUINE SANDPIPER PARTS

All certification, standards, guarantees & warranties originally supplied with this pump will be invalidated by the use of service parts not identified as "Genuine SANDPIPER Parts."

SANDPIPER®
SANDPIPERPUMP.COM
Warren Rupp, Inc. • A Unit of IDEX Corporation
800 N. Main St., Mansfield, Ohio 44902 USA
Telephone 419.524.8388 • Fax 419.522.7867

ISO 9001 Certified
ISO 14001 Certified

EXPLANATION OF PUMP NOMENCLATURE

Your Model #: S _____ _____ _____ _____ _____ _____ _____ _____ _____ _____ _____

(fill in from pump nameplate)

Pump Config.	Pump Size	Check Valve	Design Level	Wetted Material	Diaphragm/ Check Valve	Check Valve Seat	Non-Wetted Material	Porting Options	Pump Style	Pump Options	Kit Options
Model #: S	XX	X	X	X	X	X	X	X	X	X	XX

PUMP BRAND
S= Sandpiper®

PUMP SIZE
10= 1”

CHECK VALVE TYPE
B= Ball

DESIGN LEVEL
1= Design Level 1

WETTED MATERIAL
K= PVDF
N= Nylon
P= Polypropylene

DIAPHRAGM/CHECK VALVE MATERIALS
1= Santoprene/Santoprene
2= Virgin PTFE-Santoprene Backup/Virgin PTFE
7= Santoprene/Nitrile
8= Virgin PTFE-Santoprene Backup/FKM
Z= One-Piece Bonded/PTFE

CHECK VALVE SEAT
K= PVDF
N= Nylon
P= Polypropylene

NON-WETTED MATERIAL OPTIONS
P= Polypropylene
I= Polypropylene with PTFE Hardware

PORTING OPTIONS
A= ANSI Flange

PUMP STYLE
S= Standard

PUMP OPTIONS
0= None
6= Metal Muffler

KIT OPTIONS
00.= None
P0.= 10-30VDC Pulse Output Kit
P1.= Intrinsically-Safe 5-30VDC,110/120VAC, 220/240VAC

Pulse Output Kit
P2.= 110/120 or 220/240VAC Pulse Output Kit
E0.= Solenoid Kit w/24VDC Coil
E1.= Solenoid Kit 24VDC Explosion-Proof Coil
E2.= Solenoid Kit w/24VAC/12VDC Coil
E3.= Solenoid Kit w/12VDC Explosion-Proof Coil
E4.= Solenoid Kit w/110VAC Coil
E5.= Solenoid Kit w/110VAC 60 Hz Explosion-Proof Coil
E6.= Solenoid Kit w/220VAC Coil
E7.= Solenoid Kit w/220VAC 60 Hz Explosion-Proof Coil
E8.= Solenoid Kit w/110VAC 50 Hz Explosion-Proof Coil
E9.= Solenoid Kit w/230VAC 50 Hz Explosion-Proof Coil
SP= Stroke Indicator Pins

MATERIALS

Material Profile: ⚠ CAUTION! Operating temperature limitations are as follows:	Operating Temperatures: Max.	Min.
CONDUCTIVE ACETAL: Tough, impact resistant, ductile. Good abrasion resistance and low friction surface. Generally inert, with good chemical resistance except for strong acids and oxidizing agents.	190°F 88°C	-20°F -29°C
EPDM: Shows very good water and chemical resistance. Has poor resistance to oils and solvents, but is fair in ketones and alcohols.	280°F 138°C	-40°F -40°C
FKM (FLUOROCARBON): Shows good resistance to a wide range of oils and solvents; especially all aliphatic, aromatic and halogenated hydrocarbons, acids, animal and vegetable oils. Hot water or hot aqueous solutions (over 70°F(21°C)) will attack FKM.	350°F 177°C	-40°F -40°C
HYTREL®: Good on acids, bases, amines and glycols at room temperatures only.	220°F 104°C	-20°F -29°C
NEOPRENE: All purpose. Resistance to vegetable oils. Generally not affected by moderate chemicals, fats, greases and many oils and solvents. Generally attacked by strong oxidizing acids, ketones, esters and nitro hydrocarbons and chlorinated aromatic hydrocarbons.	200°F 93°C	-10°F -23°C
NITRILE: General purpose, oil-resistant. Shows good solvent, oil, water and hydraulic fluid resistance. Should not be used with highly polar solvents like acetone and MEK, ozone, chlorinated hydrocarbons and nitro hydrocarbons.	190°F 88°C	-10°F -23°C
NYLON: 6/6 High strength and toughness over a wide temperature range. Moderate to good resistance to fuels, oils and chemicals.	180°F 82°C	32°F 0°C
POLYPROPYLENE: A thermoplastic polymer. Moderate tensile and flex strength. Resists stong acids and alkali. Attacked by chlorine, fuming nitric acid and other strong oxidizing agents.	180°F 82°C	32°F 0°C
PVDF: (Polyvinylidene Fluoride) A durable fluoroplastic with excellent chemical resistance. Excellent for UV applications. High tensile strength and impact resistance.	250°F 121°C	0°F -18°C
SANTOPRENE®: Injection molded thermoplastic elastomer with no fabric layer. Long mechanical flex life. Excellent abrasion resistance.	275°F 135°C	-40°F -40°C
UHMW PE: A thermoplastic that is highly resistant to a broad range of chemicals. Exhibits outstanding abrasion and impact resistance, along with environmental stress-cracking resistance.	180°F 82°C	-35°F -37°C
URETHANE: Shows good resistance to abrasives. Has poor resistance to most solvents and oils.	150°F 66°C	32°F 0°C
VIRGIN PTFE: (PFA/TFE) Chemically inert, virtually impervious. Very few chemicals are known to chemically react with PTFE; molten alkali metals, turbulent liquid or gaseous fluorine and a few fluoro-chemicals such as chlorine trifluoride or oxygen difluoride which readily liberate free fluorine at elevated temperatures.	220°F 104°C	-35°F -37°C

Maximum and Minimum Temperatures are the limits for which these materials can be operated. Temperatures coupled with pressure affect the longevity of diaphragm pump components. Maximum life should not be expected at the extreme limits of the temperature ranges.

Metals:

ALLOY C: Equal to ASTM494 CW-12M-1 specification for nickel and nickel alloy.

STAINLESS STEEL: Equal to or exceeding ASTM specification A743 CF-8M for corrosion resistant iron chromium, iron chromium nickel and nickel based alloy castings for general applications. Commonly referred to as 316 Stainless Steel in the pump industry.

For specific applications, always consult the Chemical Resistance Chart.

Warren Rupp, Inc. • A Unit of IDEX Corporation
800 N. Main St., Mansfield, Ohio 44902 USA
Telephone 419.524.8388 • Fax 419.522.7867