SERVICE & OPERATING MANUAL

Original Instructions

Certified Quality

ISO 9001 Certified
ISO 14001 Certified

Model S15

Metallic

Design Level 1

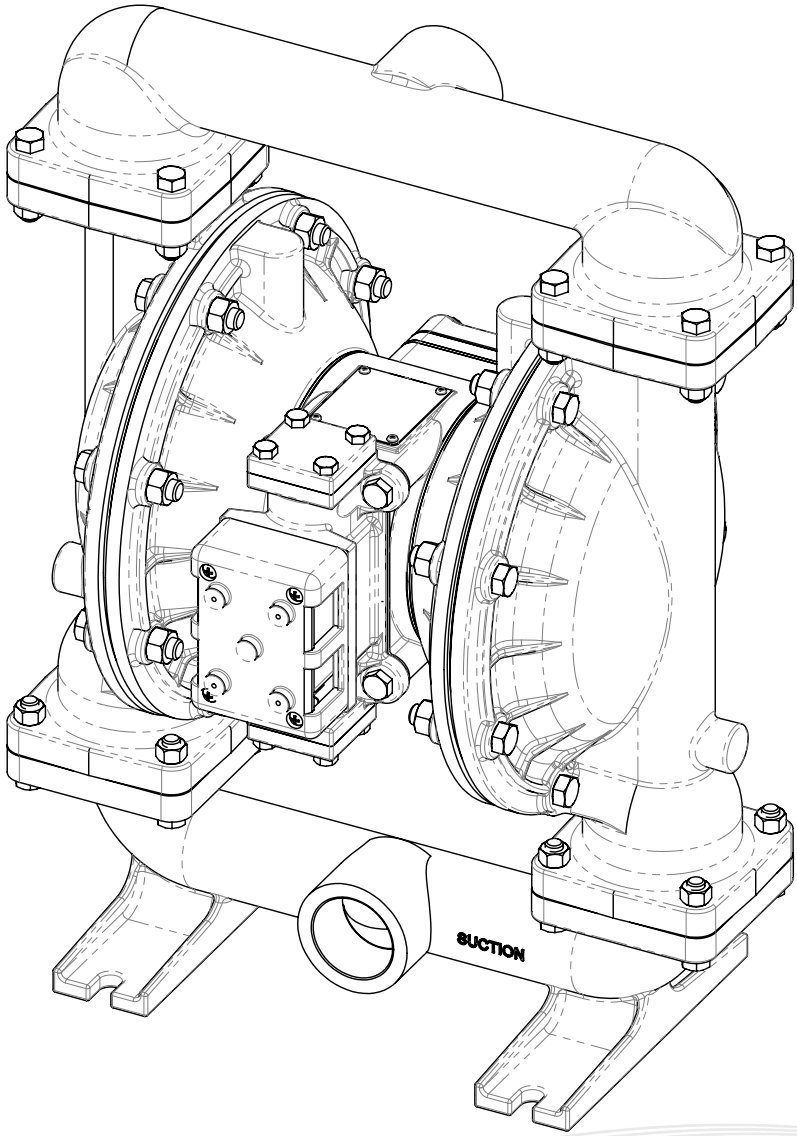

Warren Rupp, Inc.
A Unit of IDEX Corporation
800 N. Main St.,
Mansfield, Ohio 44902 USA
Telephone 419.524.8388
Fax 419.522.7867
SANDPIPERPUMP.COM

© Copyright 2022 Warren Rupp, Inc.
All rights reserved

SANDPIPER®
A WARREN RUPP, INC. BRAND
SANDPIPERPUMP.COM

Safety Information

⚠ IMPORTANT



Read the safety warnings and instructions in this manual before pump installation and start-up. Failure to comply with the recommendations stated in this manual could damage the pump and void factory warranty.



When the pump is used for materials that tend to settle out or solidify, the pump should be flushed after each use to prevent damage. In freezing temperatures the pump should be completely drained between uses.

⚠ CAUTION



Before pump operation, inspect all fasteners for loosening caused by gasket creep. Retighten loose fasteners to prevent leakage. Follow recommended torques stated in this manual.



Nonmetallic pumps and plastic components are not UV stabilized. Ultraviolet radiation can damage these parts and negatively affect material properties. Do not expose to UV light for extended periods of time.



WARNING
Pump not designed, tested or certified to be powered by compressed natural gas. Powering the pump with natural gas will void the warranty.



WARNING
The use of non-OEM replacement parts will void (or negate) agency certifications, including CE, ATEX, CSA, 3A and EC1935 compliance (Food Contact Materials). Warren Rupp, Inc. cannot ensure nor warrant non-OEM parts to meet the stringent requirements of the certifying agencies.

⚠ WARNING



When used for toxic or aggressive fluids, the pump should always be flushed clean prior to disassembly.



Before maintenance or repair, shut off the compressed air line, bleed the pressure, and disconnect the air line from the pump. Be certain that approved eye protection and protective clothing are worn at all times. Failure to follow these recommendations may result in serious injury or death.



Airborne particles and loud noise hazards. Wear eye and ear protection.



In the event of diaphragm rupture, pumped material may enter the air end of the pump, and be discharged into the atmosphere. If pumping a product that is hazardous or toxic, the air exhaust must be piped to an appropriate area for safe containment.



Take action to prevent static sparking. Fire or explosion can result, especially when handling flammable liquids. The pump, piping, valves, containers and other miscellaneous equipment must be properly grounded.



This pump is pressurized internally with air pressure during operation. Make certain that all fasteners and piping connections are in good condition and are reinstalled properly during reassembly.



Use safe practices when lifting

ATEX Pumps - Conditions For Safe Use

1. Ambient temperature range is as specified in tables 1 to 3 on the next page *(per Annex I of DEKRA 18ATEX0094X)*

2. ATEX compliant pumps are suitable for use in explosive atmospheres when the equipment is properly grounded in accordance with local electrical codes

3. **Non-Metallic ATEX Pumps only — See Explanation of Pump Nomenclature / ATEX Details Page**
   Conductive Polypropylene, conductive Acetal or conductive PVDF pumps are not to be installed in applications where the pumps may be subjected to oil, greases and hydraulic liquids.

4. The optionally provided solenoids shall be protected by a fuse corresponding to its rated current (max 3*Irat according to EN 60127) or by a motor protecting switch with short circuit and thermal instantaneous tripping (set to the rated current) as short circuit protection. For solenoids with a very low rated current, a fuse with the lowest current value according to the indicated standard will be sufficient. The fuse may be accommodated in the associated supply unit or shall be separately arranged. The rated voltage of the fuse shall be equal or greater than the stated rated voltage of the solenoid. The breaking capacity of the fuse shall be as high as or higher than the maximum expected short circuit current at the location of the installation (usually 1500 A). The maximum permissible ripple is 20% for all dc solenoids.
   ***Not applicable for all pump models — See Explanation of Pump Nomenclature / ATEX Details Page**

5. When operating pumps equipped with non-conductive diaphragms that exceed the maximum permissible projected area, as defined in EN ISO 80079-36 : 2016 section 6.7.5 table 8, the following protection methods must be applied
   - Equipment is always used to transfer electrically conductive fluids or
   - Explosive environment is prevented from entering the internal portions of the pump, i.e. dry running.

6. Pumps provided with the pulse output kit and used in the potentially explosive atmosphere caused by the presence of the combustible dust shall be installed in such a way that the pulse output kit is protected against impact
   ***Not applicable for all pump models — See Explanation of Pump Nomenclature / ATEX Details Page**

Temperature Tables

Table 1. Category 1 & Category 2 ATEX Rated Pumps

Ambient Temperature Range [°C]	Process Temperature Range [°C][1]	Temperature Class	Maximum Surface Temperature [°C]
-20°C to +60°C	-20°C to +80°C	T5	T100°C
	-20°C to +108°C	T4	T135°C
	-20°C to + 160°C	T3	T200°C
	-20°C to +177°C	(225°C) T2	

[1]Per CSA standards ANSI LC6-2018 US & Canadian Technical Letter R14, G-Series Natural Gas Models are restricted to (-20°C to + 80°C) process temperature

Table 2. Category 2 ATEX Rated Pumps Equipped with Pulse Output Kit or Integral Solenoid:

Ambient Temperature Range [°C]	Process Temperature Range [°C]	Temperature Class	Maximum Surface Temperature [°C]	Options	
				Pulse Output Kit	Integral Solenoid
-20°C to +60°C	-20°C to +100°C	T5	T100	X	
-20°C to +50°C	-20°C to +100°C	T5	T100		X

[2]ATEX Pulse output or Intergral Solenoid Not Available For All Pump Models See Explanation of Pump Nomenclature / ATEX Details Page

Table 3. Category M1 ATEX Rated Pumps for Mining

Ambient Temperature Range [°C]	Process Temperature Range [°C]
-20°C to +60°C	-20°C to +150°C

Note: The ambient temperature range and the process temperature range should not exceed the operating temperature range of the applied non-metallic parts as listed in the manuals of the pumps.

Table of Contents

SECTION 1: PUMP SPECIFICATIONS.....1
- Explanation of Nomenclature
- Performance
- Materials
- Dimensional Drawings

SECTION 2: INSTALLATION & OPERATION ...5
- Principle of Pump Operation
- Recommended Installation Guide
- Troubleshooting Guide

SECTION 3: EXPLODED VIEW.....8
- Composite Repair Parts Drawing
- Composite Repair Parts List
- Material Codes

SECTION 4: AIR END 11
- Air Distribution Valve Assembly
- Air Valve with Stroke Indicator Assembly
- Pilot Valve Assembly
- Intermediate Assembly

SECTION 5: WET END.....17
- Diaphragm Drawings
- Diaphragm Servicing

SECTION 6: OPTIONAL CONFIGURATIONS .19
- Solenoid Shifted Air Valve

SECTION 7: WARRANTY & CERTIFICATES ..20
- Warranty
- CE Declaration of Conformity - Machinery
- ATEX Declaration of Conformity

Explanation of Pump Nomenclature

Your Model #: S _____ _ _ _ _ _ _ _ _ _ _
(fill in from pump nameplate)

Pump Brand	Pump Size	Check Valve	Design Level	Wetted Material	Diaphragm/ Check Valve	Check Valve Seat	Non-Wetted Material	Porting Options	Pump Style	Pump Options	Kit Options
Model #: S	XX	X	X	X	X	X	X	X	X	X	XX

Pump Brand
S SANDPIPER®

Pump Size
15 1 1/2"

Check Valve Type
B Ball
W Weighted Ball

Design Level
1 Design Level

Wetted Material
A Aluminum
I Cast Iron
S Stainless Steel
H Alloy C
X Unpainted Aluminum

Diaphragm/Check Valve Materials
1 Santoprene/Santoprene
2 PTFE-Santoprene/PTFE
B Nitrile/Nitrile
C FKM/PTFE
E EPDM/EPDM
I EPDM/Santoprene
G PTFE-Neoprene/PTFE
M Santoprene/PTFE
N Neoprene/Neoprene
V FKM/FKM
Z One-Piece Bonded/PTFE

Check Valve Seat
A Aluminum
B Nitrile
C Carbon Steel
E EPDM
N Neoprene
S Stainless Steel
T PTFE
V FKM
W UHMW Polyethylene

Non-Wetted Material Options
A Painted Aluminum
I Cast Iron
J Painted Aluminum w/PTFE Coated Hardware
S Stainless Steel with Stainless Steel Hardware
Y Painted Aluminum with Stainless Steel Hardware
Z Cast Iron with Stainless Steel Hardware

Porting Options
N NPT Threads
B BSP (Tapered) Threads
U Universal Flange (Fits ANSI & DIN)
R Raised Face 150# Threaded ANSI Flange
W Welded Raised Face #150 ANSI Flanged Manifolds

Pump Style
S Standard

Pump Options
0 None
6 Threaded Muffler (Conductive)

Kit Options
00. None
P0. 10.30VDC Pulse Output Kit
P1. Intrinsically-Safe 5.30VDC, 110/120VAC 220/240 VAC Pulse Output Kit
P2. 110/120 or 220/240VAC Pulse Output Kit
E0. Solenoid Kit with 24VDC Coil
E1. Solenoid Kit with 24VDC Explosion-Proof Coil
E2. Solenoid Kit with 24VAC/12VDC Coil
E3. Solenoid Kit with 12VDC Explosion-Proof Coil
E4. Solenoid Kit with 110VAC Coil
E5. Solenoid Kit with 110VAC Explosion-Proof Coil
E6. Solenoid Kit with 220VAC Coil
E7. Solenoid Kit with 220VAC Explosion-Proof Coil
E8. Solenoid Kit with 110VAC, 50 Hz Explosion-Proof Coil
E9. Solenoid Kit with 230VAC, 50 Hz Explosion-Proof Coil
SP. Stroke Indicator Pins

A1. Solenoid Kit with 12 VDC ATEX Compliant Coil
A2. Solenoid Kit with 24 VDC ATEX Compliant Coil
A3. Solenoid Kit with 110/120 VAC 50/60 Hz ATEX Compliant Coil
A4. Solenoid Kit with 220/240 VAC 50/60 Hz ATEX Compliant Coil

FM APPROVED IEC EEX m T4 CSA®

Note: Pump models equipped with these explosion-proof solenoid kit options E1, E3, E5, E7, E8 or E9, are certified and approved by the above agencies. They are NOT ATEX compliant.

Your Serial #: *(fill in from pump nameplate)* _____

ATEX Detail

	ATEX Details	Wetted Material Options	Non-Wetted Material Options	Pump Options	Kit Options
Ex	II 1 G Ex h IIC T5...225°C (T2) Ga II 1D Ex h IIIC T100°C...T200°C Da I M1 Ex h I Ma	H, I, S	I, S, Z	6	00
	II 2 G Ex h IIC T5...225°C (T2) Gb II 2 D Ex h IIIC T100°C...T200°C Db	A, H, I, S, X	A, I, S, Y, Z	6	00
	II 2 G Ex h ia IIC T5 Gb II 2 D Ex h ia IIIC T100°C Db	A, H, I, S, X	A, I, S, Y, Z	6	P1
	II 2 G Ex h mb IIC T5 Gb II 2 D Ex h mb tb IIIC T100°C Db	A, H, I, S, X	A, I, S, Y, Z	6	A1, A2, A3, A4

Performance

S15 METALLIC

SUCTION/DISCHARGE PORT SIZE
- 1½" NPT (internal)
- 1½" BSP Tapered (internal)
- 1½" ANSI 150# Raised Face Flanges

CAPACITY
- 0 to 106 gallons per minute (0 to 401 liters per minute)

AIR DISTRIBUTION VALVE
- No-lube, no-stall design

SOLIDS-HANDLING
- Up to .25 in. (6mm)

HEADS UP TO
- 125 psi or 289 ft. of water (8.6 Kg/cm^2 or 86 meters)

DISPLACEMENT/STROKE
- .41 Gallon / 1.55 liter

MAX OPERATING PRESSURE
- 125 psi (8.6 bar)

SHIPPING WEIGHT
- Aluminum 53 lbs. (24kg)
- Cast Iron 93 lbs. (42kg)
- Stainless Steel 95 lbs. (43kg)

MODEL S15 Metallic Performance Curve

Performance based on the following: elastomer fitted pump, flooded suction, water at ambient conditions.
The use of other materials and varying hydraulic conditions may result in deviations in excess of 5%.

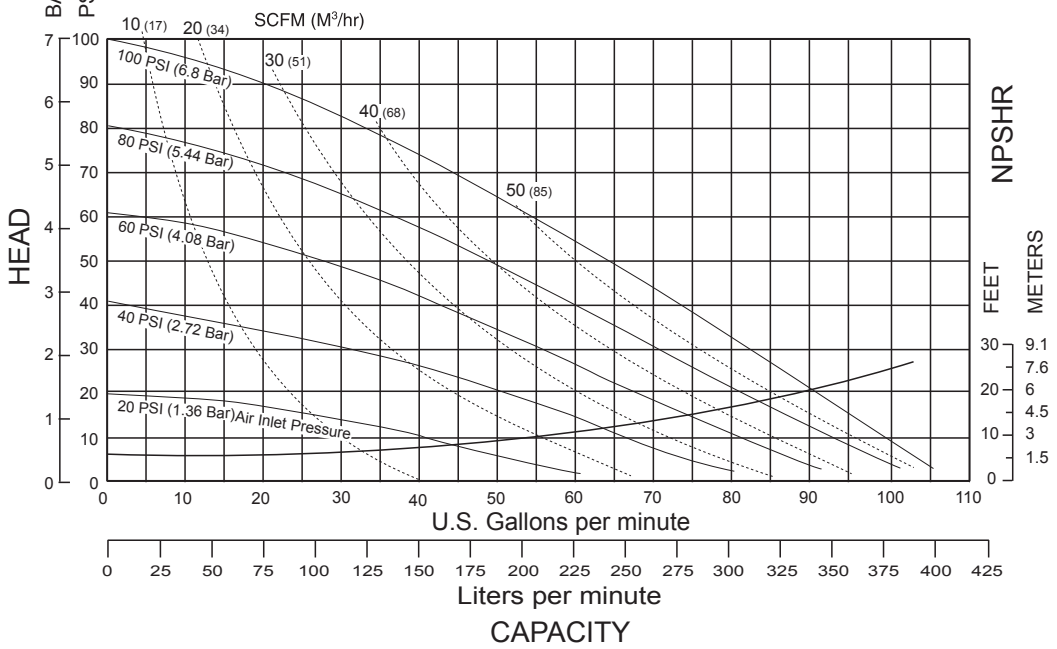

Materials

Material Profile:	Operating Temperatures:	
⚠ *CAUTION! Operating temperature limitations are as follows:*	Max.	Min.
Conductive Acetal: Tough, impact resistant, ductile. Good abrasion resistance and low friction surface. Generally inert, with good chemical resistance except for strong acids and oxidizing agents.	190°F 88°C	-20°F -29°C
EPDM: Shows very good water and chemical resistance. Has poor resistance to oils and solvents, but is fair in ketones and alcohols.	280°F 138°C	-40°F -40°C
FKM: (Fluorocarbon) Shows good resistance to a wide range of oils and solvents; especially all aliphatic, aromatic and halogenated hydrocarbons, acids, animal and vegetable oils. Hot water or hot aqueous solutions (over 70°F(21°C)) will attack FKM.	350°F 177°C	-40°F -40°C
Hytrel®: Good on acids, bases, amines and glycols at room temperatures only.	220°F 104°C	-20°F -29°C
Neoprene: All purpose. Resistance to vegetable oils. Generally not affected by moderate chemicals, fats, greases and many oils and solvents. Generally attacked by strong oxidizing acids, ketones, esters and nitro hydrocarbons and chlorinated aromatic hydrocarbons.	200°F 93°C	-10°F -23°C
Nitrile: General purpose, oil-resistant. Shows good solvent, oil, water and hydraulic fluid resistance. Should not be used with highly polar solvents like acetone and MEK, ozone, chlorinated hydrocarbons and nitro hydrocarbons.	190°F 88°C	-10°F -23°C
Nylon: 6/6 High strength and toughness over a wide temperature range. Moderate to good resistance to fuels, oils and chemicals.	180°F 82°C	32°F 0°C
Polypropylene: A thermoplastic polymer. Moderate tensile and flex strength. Resists stong acids and alkali. Attacked by chlorine, fuming nitric acid and other strong oxidizing agents.	180°F 82°C	32°F 0°C
PVDF: (Polyvinylidene Fluoride) A durable fluoroplastic with excellent chemical resistance. Excellent for UV applications. High tensile strength and impact resistance.	250°F 121°C	0°F -18°C
Santoprene®: Injection molded thermoplastic elastomer with no fabric layer. Long mechanical flex life. Excellent abrasion resistance.	275°F 135°C	-40°F -40°C
UHMW PE: A thermoplastic that is highly resistant to a broad range of chemicals. Exhibits outstanding abrasion and impact resistance, along with environmental stress-cracking resistance.	180°F 82°C	-35°F -37°C
Urethane: Shows good resistance to abrasives. Has poor resistance to most solvents and oils.	150°F 66°C	32°F 0°C
Virgin PTFE: (PFA/TFE) Chemically inert, virtually impervious. Very few chemicals are known to chemically react with PTFE; molten alkali metals, turbulent liquid or gaseous fluorine and a few fluoro-chemicals such as chlorine trifluoride or oxygen difluoride which readily liberate free fluorine at elevated temperatures.	220°F 104°C	-35°F -37°C

Maximum and Minimum Temperatures are the limits for which these materials can be operated. Temperatures coupled with pressure affect the longevity of diaphragm pump components. Maximum life should not be expected at the extreme limits of the temperature ranges.

Metals:

Alloy C: Equal to ASTM494 CW-12M-1 specification for nickel and nickel alloy.

Stainless Steel: Equal to or exceeding ASTM specification A743 CF-8M for corrosion resistant iron chromium, iron chromium nickel and nickel based alloy castings for general applications. Commonly referred to as 316 Stainless Steel in the pump industry.

For specific applications, always consult the Chemical Resistance Chart.

Dimensional Drawings

S15 Metallic - NPT

Dimensions in inches (mm dimensions in brackets). Dimensional Tolerance:±1/8" (± 3mm)

The dimensions on this drawing are for reference only. A certified drawing can be requested if physical dimensions are needed.

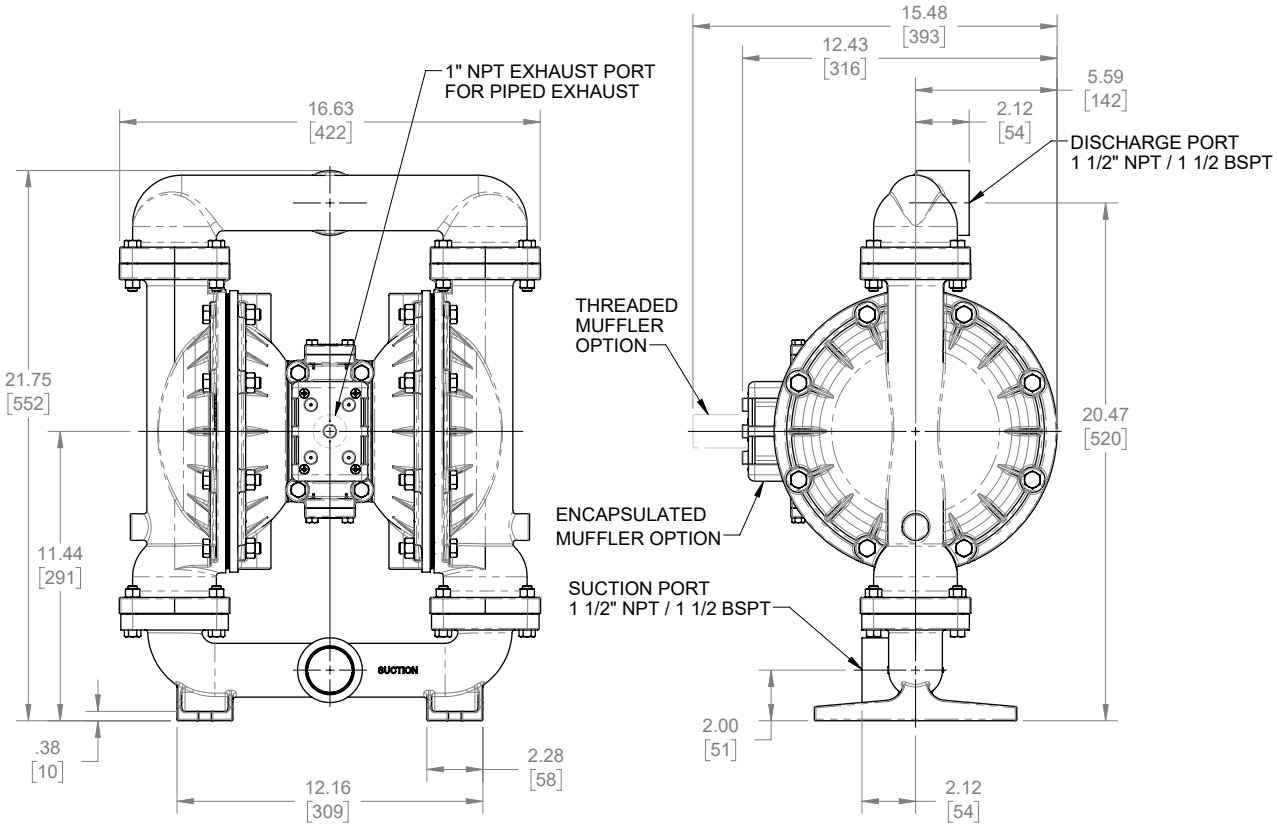

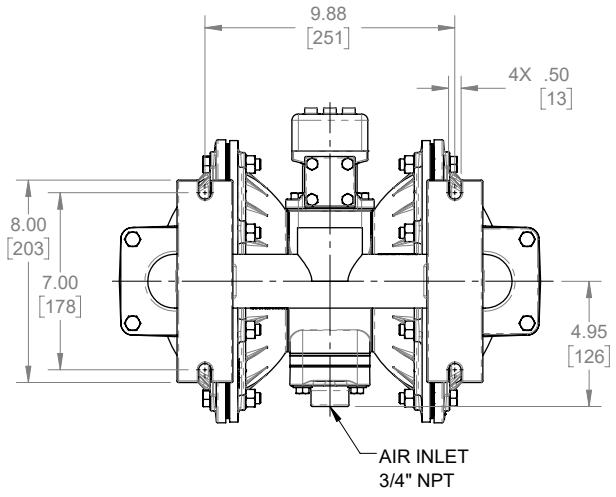

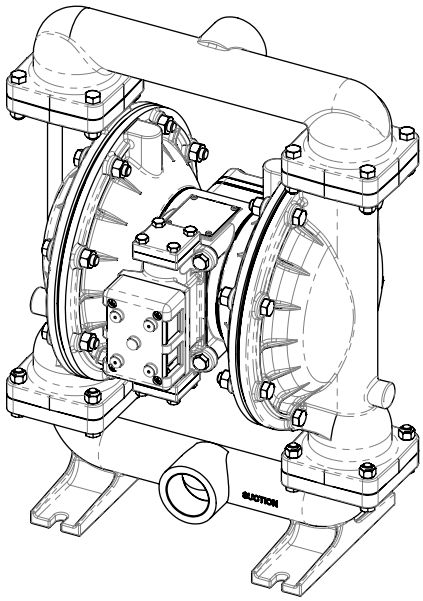

Dimensional Drawings

S15 Metallic - ANSI / DIN Flange

Dimensions in inches (mm dimensions in brackets). Dimensional Tolerance:±1/8" (± 3mm)

The dimensions on this drawing are for reference only. A certified drawing can be requested if physical dimensions are needed.

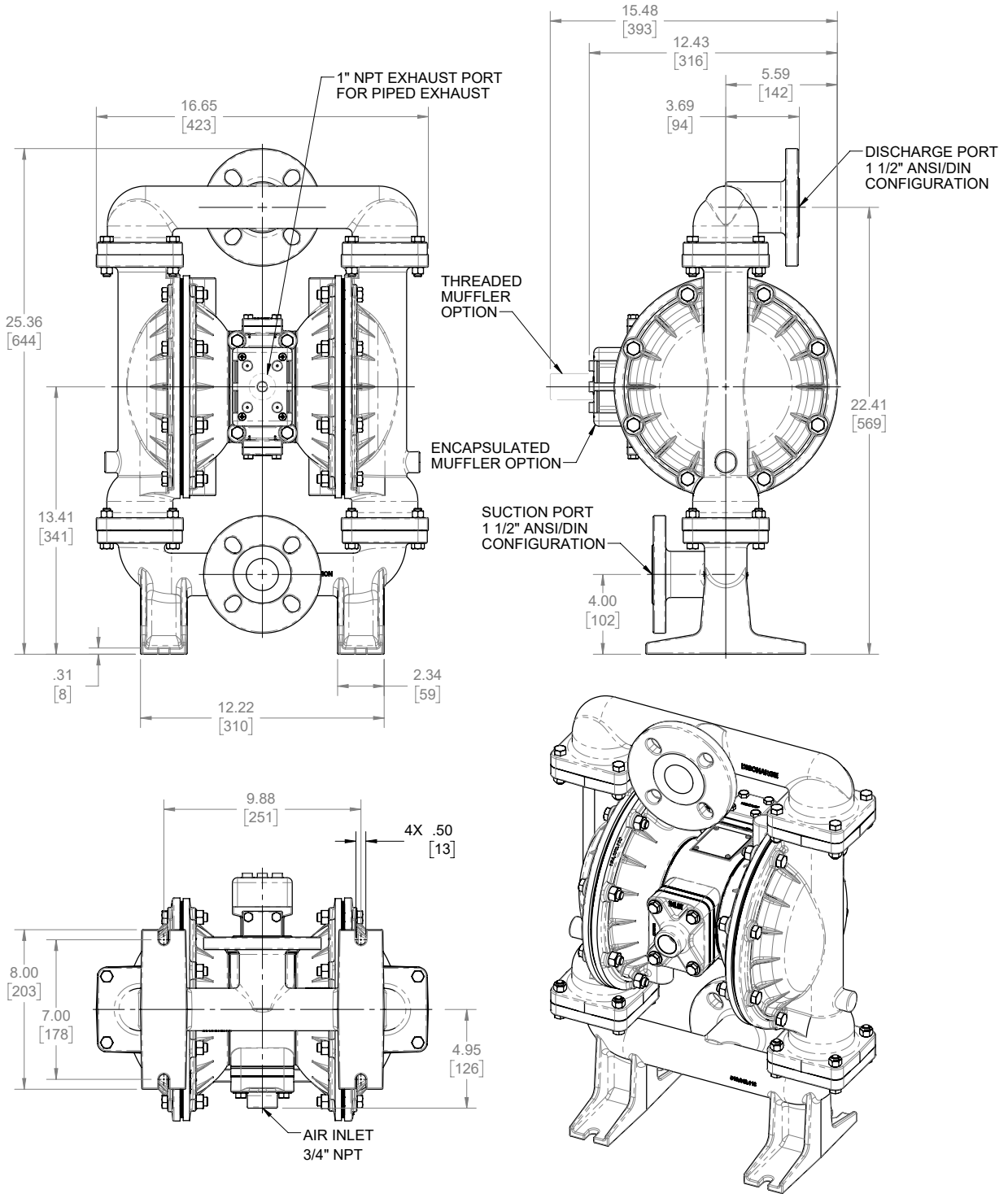

Principle of Pump Operation

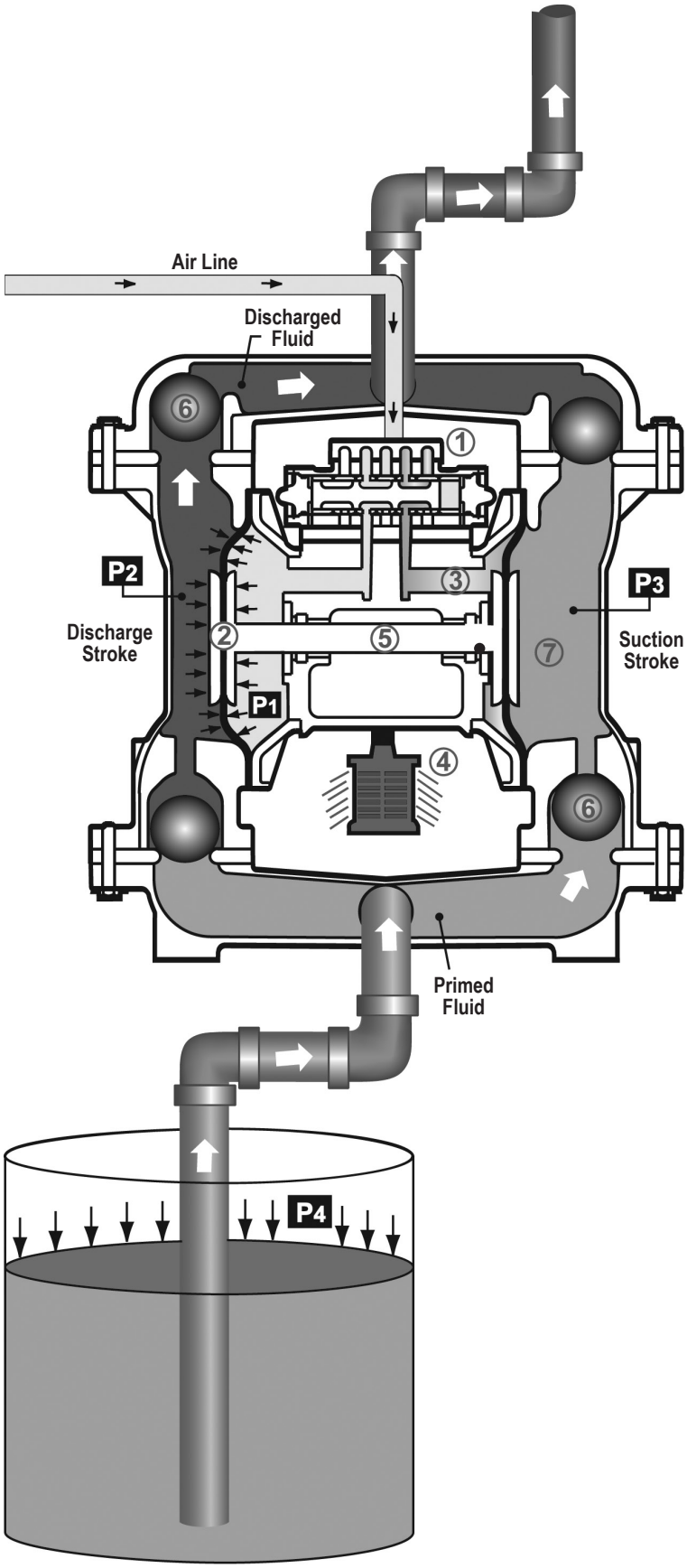

Air-Operated Double Diaphragm (AODD) pumps are powered by compressed air or nitrogen.

The main directional (air) control valve ① distributes compressed air to an air chamber, exerting uniform pressure over the inner surface of the diaphragm ②. At the same time, the exhausting air ③ from behind the opposite diaphragm is directed through the air valve assembly(s) to an exhaust port ④.

As inner chamber pressure **(P1)** exceeds liquid chamber pressure **(P2)**, the rod ⑤ connected diaphragms shift together creating discharge on one side and suction on the opposite side. The discharged and primed liquid's directions are controlled by the check valves (ball or flap)⑥ orientation.

The pump primes as a result of the suction stroke. The suction stroke lowers the chamber pressure **(P3)** increasing the chamber volume. This results in a pressure differential necessary for atmospheric pressure **(P4)** to push the fluid through the suction piping and across the suction side check valve and into the outer fluid chamber ⑦.

Suction (side) stroking also initiates the reciprocating (shifting, stroking or cycling) action of the pump. The suction diaphragm's movement is mechanically pulled through its stroke. The diaphragm's inner plate makes contact with an actuator plunger aligned to shift the pilot signaling valve. Once actuated, the pilot valve sends a pressure signal to the opposite end of the main directional air valve, redirecting the compressed air to the opposite inner chamber.

SUBMERGED ILLUSTRATION

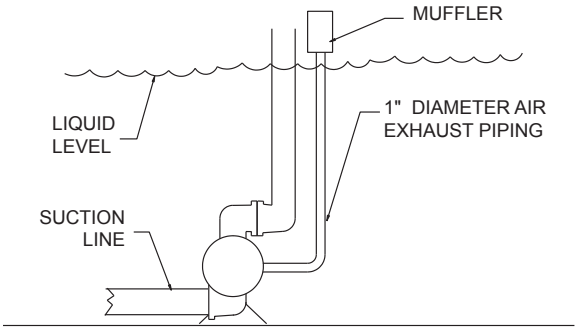

Pump can be submerged if the pump materials of construction are compatible with the liquid being pumped. The air exhaust must be piped above the liquid level. When the pumped product source is at a higher level than the pump (flooded suction condition), pipe the exhaust higher than the product source to prevent siphoning spills.

Recommended Installation Guide

Available Accessories:

1. Surge Suppressor
2. Filter/Regulator
3. Air Dryer
4. Lubricator

Note: Surge Suppressor and Piping, including air line, must be supported after the flexible connections.

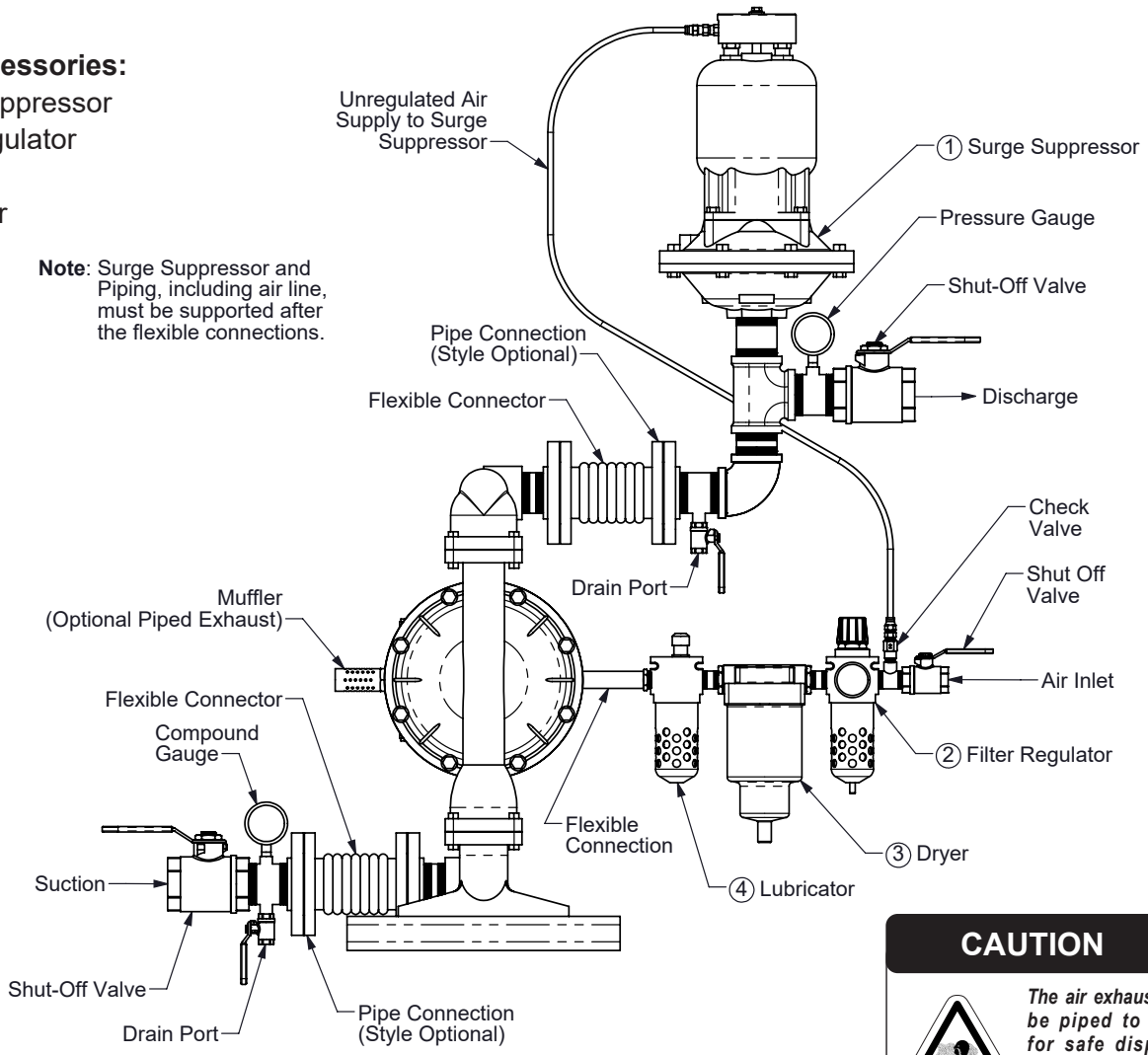

CAUTION

The air exhaust should be piped to an area for safe disposition of the product being pumped, in the event of a diaphragm failure.

Installation And Start-Up

Locate the pump as close to the product being pumped as possible. Keep the suction line length and number of fittings to a minimum. Do not reduce the suction line diameter.

Air Supply

Connect the pump air inlet to an air supply with sufficient capacity and pressure to achieve desired performance. A pressure regulating valve should be installed to insure air supply pressure does not exceed recommended limits.

Air Valve Lubrication

The air distribution system is designed to operate WITHOUT lubrication. This is the standard mode of operation. If lubrication is desired, install an air line lubricator set to deliver one drop of SAE 10 non-detergent oil for every 20 SCFM (9.4 liters/sec.) of air the pump consumes. Consult the Performance Curve to determine air consumption.

Air Line Moisture

Water in the compressed air supply may cause icing or freezing of the exhaust air, causing the pump to cycle erratically or stop operating. Water in the air supply can be reduced by using a point-of-use air dryer.

Air Inlet And Priming

To start the pump, slightly open the air shut-off valve. After the pump primes, the air valve can be opened to increase air flow as desired. If opening the valve increases cycling rate, but does not increase the rate of flow, cavitation has occurred. The valve should be closed slightly to obtain the most efficient air flow to pump flow ratio.

Troubleshooting Guide

Symptom:	Potential Cause(s):	Recommendation(s):
Pump Cycles Once	Deadhead (system pressure meets or exceeds air supply pressure).	Increase the inlet air pressure to the pump. Pump is designed for 1:1 pressure ratio at zero flow. (Does not apply to high pressure 2:1 units).
	Air valve or intermediate gaskets installed incorrectly.	Install gaskets with holes properly aligned.
	Bent or missing actuator plunger.	Remove pilot valve and inspect actuator plungers.
Pump Will Not Operate / Cycle	Pump is over lubricated.	Set lubricator on lowest possible setting or remove. Units are designed for lube free operation.
	Lack of air (line size, PSI, CFM).	Check the air line size and length, compressor capacity (HP vs. CFM required).
	Check air distribution system.	Disassemble and inspect main air distribution valve, pilot valve and pilot valve actuators.
	Discharge line is blocked or clogged manifolds.	Check for inadvertently closed discharge line valves. Clean discharge manifolds/piping.
	Deadhead (system pressure meets or exceeds air supply pressure).	Increase the inlet air pressure to the pump. Pump is designed for 1:1 pressure ratio at zero flow. (Does not apply to high pressure 2:1 units).
	Blocked air exhaust muffler.	Remove muffler screen, clean or de-ice, and re-install.
	Pumped fluid in air exhaust muffler.	Disassemble pump chambers. Inspect for diaphragm rupture or loose diaphragm plate assembly.
	Pump chamber is blocked.	Disassemble and inspect wetted chambers. Remove or flush any obstructions.
Pump Cycles and Will Not Prime or No Flow	Cavitation on suction side.	Check suction condition (move pump closer to product).
	Check valve obstructed. Valve ball(s) not seating properly or sticking.	Disassemble the wet end of the pump and manually dislodge obstruction in the check valve pocket. Clean out around valve ball cage and valve seat area. Replace valve ball or valve seat if damaged. Use heavier valve ball material.
	Valve ball(s) missing (pushed into chamber or manifold).	Worn valve ball or valve seat. Worn fingers in valve ball cage (replace part). Check Chemical Resistance Guide for compatibility.
	Valve ball(s) / seat(s) damaged or attacked by product.	Check Chemical Resistance Guide for compatibility.
	Check valve and/or seat is worn or needs adjusting.	Inspect check valves and seats for wear and proper setting. Replace if necessary.
	Suction line is blocked.	Remove or flush obstruction. Check and clear all suction screens or strainers.
	Excessive suction lift.	For lifts exceeding 20' of liquid, filling the chambers with liquid will prime the pump in most cases.
	Suction side air leakage or air in product.	Visually inspect all suction-side gaskets and pipe connections.
	Pumped fluid in air exhaust muffler.	Disassemble pump chambers. Inspect for diaphragm rupture or loose diaphragm plate assembly.
Pump Cycles Running Sluggish / Stalling, Flow Unsatisfactory	Over lubrication.	Set lubricator on lowest possible setting or remove. Units are designed for lube free operation.
	Icing.	Remove muffler screen, de-ice, and re-install. Install a point of use air drier.
	Clogged manifolds.	Clean manifolds to allow proper air flow.
	Deadhead (system pressure meets or exceeds air supply pressure).	Increase the inlet air pressure to the pump. Pump is designed for 1:1 pressure ratio at zero flow. (Does not apply to high pressure 2:1 units).
	Cavitation on suction side.	Check suction (move pump closer to product).
	Lack of air (line size, PSI, CFM).	Check the air line size, length, compressor capacity.
	Excessive suction lift.	For lifts exceeding 20' of liquid, filling the chambers with liquid will prime the pump in most cases.
	Air supply pressure or volume exceeds system hd.	Decrease inlet air (press. and vol.) to the pump. Pump is cavitating the fluid by fast cycling.
	Undersized suction line.	Meet or exceed pump connections.
	Restrictive or undersized air line.	Install a larger air line and connection.
	Suction side air leakage or air in product.	Visually inspect all suction-side gaskets and pipe connections.
	Suction line is blocked.	Remove or flush obstruction. Check and clear all suction screens or strainers.
	Pumped fluid in air exhaust muffler.	Disassemble pump chambers. Inspect for diaphragm rupture or loose diaphragm plate assembly.
	Check valve obstructed.	Disassemble the wet end of the pump and manually dislodge obstruction in the check valve pocket.
	Check valve and/or seat is worn or needs adjusting.	Inspect check valves and seats for wear and proper setting. Replace if necessary.
	Entrained air or vapor lock in chamber(s).	Purge chambers through tapped chamber vent plugs. Purging the chambers of air can be dangerous.
Product Leaking Through Exhaust	Diaphragm failure, or diaphragm plates loose.	Replace diaphragms, check for damage and ensure diaphragm plates are tight.
	Diaphragm stretched around center hole or bolt holes.	Check for excessive inlet pressure or air pressure. Consult Chemical Resistance Chart for compatibility with products, cleaners, temperature limitations and lubrication.
Premature Diaphragm Failure	Cavitation.	Enlarge pipe diameter on suction side of pump.
	Excessive flooded suction pressure.	Move pump closer to product. Raise pump/place pump on top of tank to reduce inlet pressure. Install Back pressure device (Tech bulletin 41r). Add accumulation tank or pulsation dampener.
	Misapplication (chemical/physical incompatibility).	Consult Chemical Resistance Chart for compatibility with products, cleaners, temperature limitations and lubrication.
	Incorrect diaphragm plates or plates on backwards, installed incorrectly or worn.	Check Operating Manual to check for correct part and installation. Ensure outer plates have not been worn to a sharp edge.
Unbalanced Cycling	Excessive suction lift.	For lifts exceeding 20' of liquid, filling the chambers with liquid will prime the pump in most cases.
	Undersized suction line.	Meet or exceed pump connections.
	Pumped fluid in air exhaust muffler.	Disassemble pump chambers. Inspect for diaphragm rupture or loose diaphragm plate assembly.
	Suction side air leakage or air in product.	Visually inspect all suction-side gaskets and pipe connections.
	Check valve obstructed.	Disassemble the wet end of the pump and manually dislodge obstruction in the check valve pocket.
	Check valve and/or seat is worn or needs adjusting.	Inspect check valves and seats for wear and proper setting. Replace if necessary.
	Entrained air or vapor lock in chamber(s).	Purge chambers through tapped chamber vent plugs.

For additional troubleshooting tips contact After Sales Support at service.warrenrupp@idexcorp.com or 419-524-8388

Composite Repair Parts Drawing

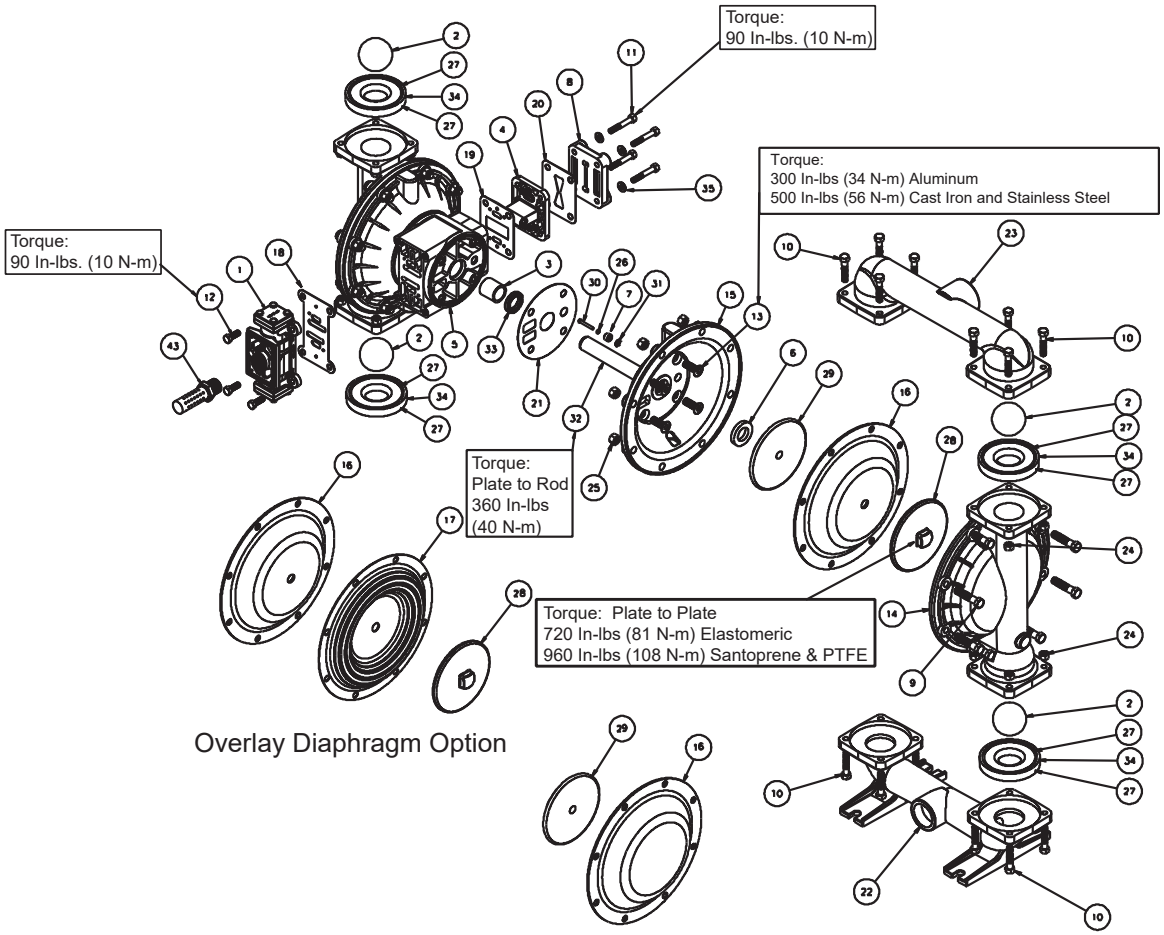

Service & Repair Kits

476-227-000 **Air End Kit** (Use With Aluminum Center)
Air Valve Assembly, Pilot Valve Assembly, Seals, Bumpers, Gaskets, Plunger and O-Rings.

476-227-010 **Air End Kit** (Use With Cast Iron Centers)

476-227-110 **Air End Kit** (Use With Stainless Steel Centers)

476-170-558 **Air End Kit** (Air Valve with Stroke Indicator Pin, Aluminum Center)Seals, O-Ring, Gaskets, Retaining Rings, Air Valve Sleeve and Spool Set, and Pilot Valve Assembly.

476-182-360 **Wet End Kit**
Nitrile Diaphragms, Balls, and Polyethylene Seats.

476-182-354 **Wet End Kit**
Santoprene Diaphragms, Balls and Polyethylene Seats.

476-182-365 **Wet End Kit**
Neoprene Diaphragms, Balls, and Polyethylene Seats.

476-182-633 **Wet End Kit**
FKM Diaphragms, PTFE Balls and Seats.

476-182-635 **Wet End Kit**
Neoprene Diaphragms, PTFE Overlay, Balls and Seats.

476-182-644 **Wet End Kit**
Santoprene Diaphragms, PTFE Balls, PTFE Seats

476-182-364 **Wet End Kit**
EPDM Diaphragms, Balls and UHMW Seats.

476-182-654 **Wet End Kit**
Santoprene Diaphragms, PTFE Overlay, PTFE Balls, PTFE Seats.

476-182-659 **Wet End Kit**
One-Plece Bonded PTFE/Nitrile Diaphragm, PTFE Balls, PTFE Seats.

475-215-000 **Midsection Conversion Kit**
(Replaces Aluminum Midsection With Cast Iron Components.) Air Inlet Cap, Intermediate Bracket, Inner Chambers and Inner Diaphragm Plates.

Hardware Kits

475-205-330 Zinc Plated Capscrews, Washers, and Hex Nuts
475-205-115 Stainless Steel Capscrews, Washers, and Hex Nuts

****Electronic Leak Detector Kits**

032-040-000 100VAC
032-037-000 220VAC

****Note:** Pumps equipped with these components are not ATEX compliant.

Composite Repair Parts List

Item	Part Number	Description	Qty.
①	031.140.000	Air Valve Assembly w/Integral muffler (Cast Iron Centers Only)	1
	031.141.000	Air Valve Assembly (Cast Iron Centers Only)	1
	⚠ 031.146.000	Air Valve Assembly w/Integral muffler (Stroke Indicator Only)	1
	⚠ 031.147.000	Air Valve Assembly (Stroke Indicator Only)(No muffler)	1
	031.173.000	Air Valve Assembly w/Integral muffler	1
	031.173.001	Air Valve Assembly (with Stainless Steel Hardware)	1
	⚠ 031.183.000	Air Valve Assembly	1
	⚠ 031.179.000	Air Valve Assembly (Cast Iron or Stainless Steel Centers Only)	1
□2	050.005.354	Ball, Check	4
	050.005.360	Ball, Check	4
	050.005.360W	Ball, Weighted Check	4
	050.005.363	Ball, Check	4
	050.005.364	Ball, Check	4
	050.005.365	Ball, Check	4
	050.005.365W	Ball, Weighted Check	4
	050.010.600	Ball, Check	4
3	070.006.170	Bushing	2
④	095.110.000	Pilot Valve Assembly	1
	095.110.558	Pilot Valve Assembly (Cast Iron Centers Only)	1
	095.110.110	Pilot Valve Assembly (Stainless Steel Centers Only)	1
5	114.024.157	Intermediate Bracket	1
	114.024.010	Intermediate Bracket	1
	114.024.110	Intermediate Bracket (Stainless Steel Centers Only)	1
⑥	132.035.357	Bumper, Diaphragm	2
⑦	135.034.506	Bushing, Plunger	2
8	165.118.157	Cap, Air Inlet Assembly	1
	165.118.010	Cap, Air Inlet Assembly	1
	165.118.110	Cap, Air Inlet Assembly (Stainless Steel Centers Only)	1
9	170.060.115	Capscrew, Hex Hd 7/16-14 X 2.00	16
	170.060.330	Capscrew, Hex Hd 7/16-14 X 2.00	16
10	170.061.115	Capscrew, Hex Hd 3/8-16 X 1.75	16
	170.061.330	Capscrew, Hex Hd 3/8-16 X 1.75	16
11	170.069.115	Capscrew, Hex Hd 5/16-18 X 1.75	4
	170.069.330	Capscrew, Hex Hd 5/16-18 X 1.75	4
12	170.006.115	Capscrew, Hex HD 3/8-16 X 1.00	4
	170.006.330	Capscrew, Hex HD 3/8-16 X 1.00	4
	171.053.115	Capscrew, Soc Hd 3/8-16 X 2.50 (Stroke Indicator Only)	4
	171.053.330	Capscrew, Soc Hd 3/8-16 X 2.50 (Stroke Indicator Only)	4
13	171.059.115	Capscrew, Soc Hd 7/16-14 X 1.25	8
	171.059.330	Capscrew, Soc Hd 7/16-14 X 1.25	
	171.011.115	Capscrew, Soc Hd 1/2-13 x 1.00 (Stainless Center)	8
14	196.169.156	Chamber, Outer	2
	196.169.010	Chamber, Outer	2
	196.169.110	Chamber, Outer	2
15	196.170.157	Chamber, Inner	2
	196.170.010	Chamber, Inner	2
	196.170.110	Chamber, Inner	2
□16	286.099.354	Diaphragm	2
	286.099.360	Diaphragm	2
	286.099.363	Diaphragm	2
	286.099.364	Diaphragm	2
	286.099.365	Diaphragm	2
□17	286.099.600	Diaphragm, Overlay	2
	286.113.000	Diaphragm, One.Piece Bonded	2
⑱	360.093.360	Gasket, Air Valve	1
⑲	360.114.360	Gasket, Pilot Valve	1
⑳	360.104.379	Gasket, Air Inlet	1

Item	Part Number	Description	Qty.
㉑	360.105.360	Gasket, Inner Chamber	2
22	518.151.156	Manifold, Suction	1
	518.151.156E	Manifold, Suction 1-1/2" BSP Tapered	1
	518.151.156W	Welded Raised Face 150# 1-1/2 " ANSI Flanged Manifold	1
	518.151.010	Manifold, Suction	1
	518.151.010E	Manifold, Suction 1-1/ 2" BSP Tapered	1
	518.151.110	Manifold, Suction	1
	518.151.110E	Manifold, Suction 1-1/ 2" BSP Tapered	1
	518.242.110	Manifold, Suction, ANSI/DIN Flanged	1
23	518.152.156	Manifold, Discharge	1
	518.152.156E	Manifold, Discharge 1-1/ 2" BSP Tapered	1
	518.152.156W	Welded Raised Face 150# 1-1/2 " ANSI Flanged Manifold	1
	518.152.010	Manifold, Discharge	1
	518.152.010E	Manifold, Discharge 1-1/ 2" BSP Tapered	1
	518.152.110	Manifold, Discharge	1
	518.152.110E	Manifold, Discharge 1-1/ 2" BSP Tapered	1
	518.243.110	Manifold, Discharge, ANSI/DIN Flanged	1
24	545.005.115	Nut, Hex 3/8.16	16
	545.005.330	Nut, Hex 3/8.16	16
25	545.007.115	Nut, Hex 7/16.14	16
	545.007.330	Nut, Hex 7/16.14	16
㉖	560.001.360	O-Ring	2
□27	560.084.360	Seal (O-Ring) (See item 34)	8
	560.084.363	Seal (O-Ring) (See item 34)	8
	560.084.364	Seal (O-Ring) (See item 34)	8
	560.084.365	O-Ring	8
	720.061.608	Seal (O-Ring) (See item 34)	8
28	612.039.157	Plate, Outer Diaphragm Assembly	2
	612.039.010	Plate, Outer Diaphragm Assembly	2
	612.097.110	Plate, Outer Diaphragm Assembly	2
29	612.195.157	Plate, Inner Diaphragm	2
	612.195.010	Plate, Inner Diaphragm	2
	612.217.150	Plate, Inner Diaphragm (use with one.piece diaphragm)	2
㉚	620.020.115	Plunger, Actuator	2
㉛	675.042.115	Ring, Retaining	2
32	685.059.120	Rod, Diaphragm	1
㉝	720.004.360	Seal, Diaphragm Rod	2
□34	722.091.550	Seat, Check Ball	4
	722.091.080	Seat, Check Ball (seals required see item 27)	4
	722.091.110	Seat, Check Ball (seals required see item 27)	4
	722.091.150	Seat, Check Ball (seals required see item 27)	4
	722.091.600	Seat, Check Ball	4
	722.091.360	Seat, Check Ball	4
	722.091.363	Seat, Check Ball	4
	722.091.364	Seat, Check Ball	4
	722.091.365	Seat, Check Ball	4
35	901.038.115	Washer, Flat 5/16	4
	901.038.330	Washer, Flat 5/16	4
36	901.048.115	Washer, Flat 3/8 (Stroke Indicator Only)	4
	901.048.330	Washer, Flat 3/8 (Stroke Indicator Only)	4
37	570.009.363	Pad, Wear (use with #286.099.363)	2
□43	⚠ 530.058.000	Muffler, Threaded (Conductive)	1

Parts not shown used with Raised Face ANSI Flange Options R and W:

170.035.330	Hex Cap Screw	4
326.051.080	Mounting Foot	2
545.007.330	Hex Nut	4
900.006.330	Lock Washer	4
901.022.330	Flat Washer	8

Parts not shown used with Raised Face ANSI Flange Option R ONLY:

334.113.110	1 1/2" ANSI 150# Raised Face Flange and Threaded Pipe Connection	2
538.036.110	1 1/2" NPT Pipe Nipple x 2" Long	2

LEGEND:

◯ = Items contained within Air End Kits

□ = Items contianed within Wet End Kits

Note: *Kits contain components specific to the material codes.*

⚠ **ATEX Compliant**

Material Codes - The Last 3 Digits of Part Number

000.....Assembly, sub-assembly; and some purchased items
010.....Cast Iron
015.....Ductile Iron
020.....Ferritic Malleable Iron
080.....Carbon Steel, AISI B-1112
110.....Alloy Type 316 Stainless Steel
111.....Alloy Type 316 Stainless Steel (Electro Polished)
112.....Alloy C
113.....Alloy Type 316 Stainless Steel (Hand Polished)
114.....303 Stainless Steel
115.....302/304 Stainless Steel
117.....440-C Stainless Steel (Martensitic)
120.....416 Stainless Steel (Wrought Martensitic)
148.....Hardcoat Anodized Aluminum
150.....6061-T6 Aluminum
152.....2024-T4 Aluminum (2023-T351)
155.....356-T6 Aluminum
156.....356-T6 Aluminum
157.....Die Cast Aluminum Alloy #380
158.....Aluminum Alloy SR-319
162.....Brass, Yellow, Screw Machine Stock
165.....Cast Bronze, 85-5-5-5
166.....Bronze, SAE 660
170.....Bronze, Bearing Type, Oil Impregnated
180.....Copper Alloy
305.....Carbon Steel, Black Epoxy Coated
306.....Carbon Steel, Black PTFE Coated
307.....Aluminum, Black Epoxy Coated
308.....Stainless Steel, Black PTFE Coated
309.....Aluminum, Black PTFE Coated
313.....Aluminum, White Epoxy Coated
330.....Zinc Plated Steel
332.....Aluminum, Electroless Nickel Plated
333.....Carbon Steel, Electroless Nickel Plated
335.....Galvanized Steel
337.....Silver Plated Steel
351.....Food Grade Santoprene®
353.....Geolast; Color: Black
354.....Injection Molded #203-40 Santoprene® Duro 40D +/-5; Color: RED
356.....Hytrel®
357.....Injection Molded Polyurethane
358.....Urethane Rubber (Some Applications) (Compression Mold)
359.....Urethane Rubber
360.....Nitrile Rubber Color coded: RED
363.....FKM (Fluorocarbon) Color coded: YELLOW
364.....EPDM Rubber Color coded: BLUE
365.....Neoprene Rubber Color coded: GREEN
366.....Food Grade Nitrile
368.....Food Grade EPDM
371.....Philthane (Tuftane)
374.....Carboxylated Nitrile
375.....Fluorinated Nitrile
378.....High Density Polypropylene
379.....Conductive Nitrile
408.....Cork and Neoprene
425.....Compressed Fibre
426.....Blue Gard
440.....Vegetable Fibre
500.....Delrin® 500
502.....Conductive Acetal, ESD-800
503.....Conductive Acetal, Glass-Filled
506.....Delrin® 150
520.....Injection Molded PVDF Natural color
540.....Nylon
542.....Nylon
544.....Nylon Injection Molded
550.....Polyethylene
551.....Glass Filled Polypropylene
552.....Unfilled Polypropylene
555.....Polyvinyl Chloride
556.....Black Vinyl
557.....Unfilled Conductive Polypropylene
558.....Conductive HDPE
559.....Glass Filled - Conductive Polypropylene
558.....Conductive HDPE
570.....Rulon II®
580.....Ryton®
600.....PTFE (virgin material) Tetrafluorocarbon (TFE)
603.....Blue Gylon®
604.....PTFE
606.....PTFE
607.....Envelon
608.....Conductive PTFE
610.....PTFE Encapsulated Silicon
611.....PTFE Encapsulated FKM
632.....Neoprene/Hytrel®
633.....FKM/PTFE
634.....EPDM/PTFE
635.....Neoprene/PTFE
637.....PTFE, FKM/PTFE
638.....PTFE, Hytrel®/PTFE
639.....Nitrile/TFE
643.....Santoprene®/EPDM
644.....Santoprene®/PTFE
656.....Santoprene® Diaphragm and Check Balls/EPDM Seats
661.....EPDM/Santoprene®
666.....FDA Nitrile Diaphragm, PTFE Overlay, Balls, and Seals
668.....PTFE, FDA Santoprene®/PTFE

- Delrin and Hytrel are registered tradenames of E.I. DuPont.
- Nylatron is a registered tradename of Polymer Corp.
- Gylon is a registered tradename of Garlock, Inc.
- Santoprene is a registered tradename of Exxon Mobil Corp.
- Rulon II is a registered tradename of Dixion Industries Corp.
- Ryton is a registered tradename of Phillips Chemical Co.
- Valox is a registered tradename of General Electric Co.

RECYCLING

Warren Rupp is an ISO14001 registered company and is committed to minimizing the impact our products have on the environment. Many components of SANDPIPER® AODD pumps are made of recyclable materials. We encourage pump users to recycle worn out parts and pumps whenever possible, after any hazardous pumped fluids are thoroughly flushed. Pump users that recycle will gain the satisfaction to know that their discarded part(s) or pump will not end up in a landfill. The recyclability of SANDPIPER products is a vital part of Warren Rupp's commitment to environmental stewardship.

Air Distribution Valve Assembly

(Use With Aluminum Centers Only)

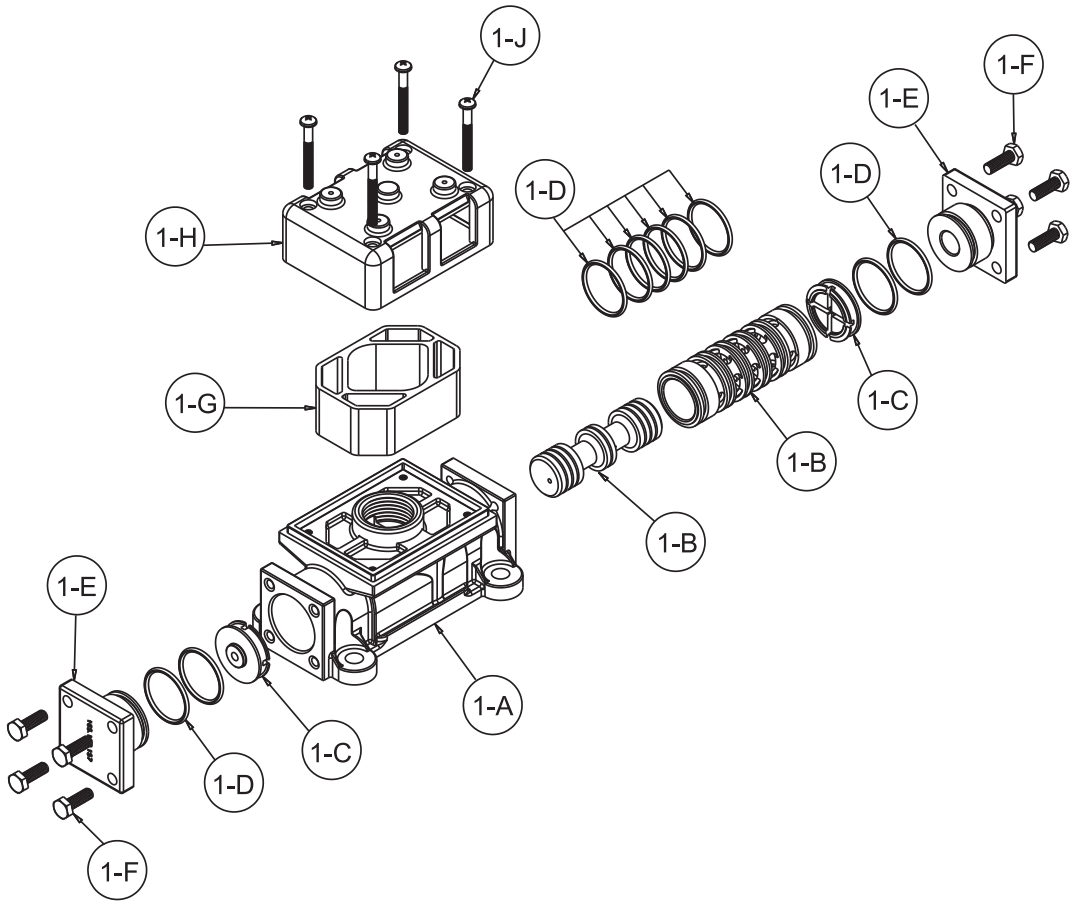

Air Distribution Valve Servicing

See repair parts drawing, remove screws.

Step 1: Remove Hex Head Cap Screws (1-F).

Step 2: Remove end cap (1-E).

Step 3: Remove spool part of (1-B) (caution: do not scratch).

Step 4: Press sleeve (1-B) from body (1-A).

Step 5: Inspect O-Ring (1-D) and replace if necessary.

Step 6: Lightly lubricate O-Rings (1-D) on sleeve (1-B).

Step 7: Press sleeve (1-B) into body (1-A).

Step 8: Reassemble in reverse order, starting with step 3.

Note: Sleeve and spool (1-B) set is match ground to a specified clearance sleeve and spools (1-B) cannot be interchanged.

⚠ IMPORTANT

Read these instructions completely, before installation and start-up. It is the responsibility of the purchaser to retain this manual for reference. Failure to comply with the recommendations stated in this manual will damage the pump, and void factory warranty.

⚠ ATEX Compliant

****Air Valve Assembly Parts List**

Item	Part Number	Description	Qty
1	**031.173.000**	**Air Valve Assembly**	**1**
1-A	095.109.157	Body, Air Valve	1
1-B	031.139.000	Sleeve and Spool Set	1
1-C	132.029.552	Bumper	2
1-D	560.020.360	O-Ring	10
1-E	165.127.157	Cap, End	2
1-F	170.032.330	Hex Head Capscrew 1/4-20 x 75	8
1-G	530.028.550	Muffler	1
1-H	165.096.551	Muffler Cap	1
1-J	706.026.330	Machine Screw	4

****Air Valve Assembly Parts List**

1	031.173.001	Air Valve Assembly	1
Consists of all components above except:			
1-F	170.032.115	Hex Head Capscrew 1/4-20 x .75	8
1-J	706.026.115	Machine Screw	4

****Note: Pumps equipped with this valve assembly are <u>not</u> ATEX compliant.**

Air Distribution Valve Assembly

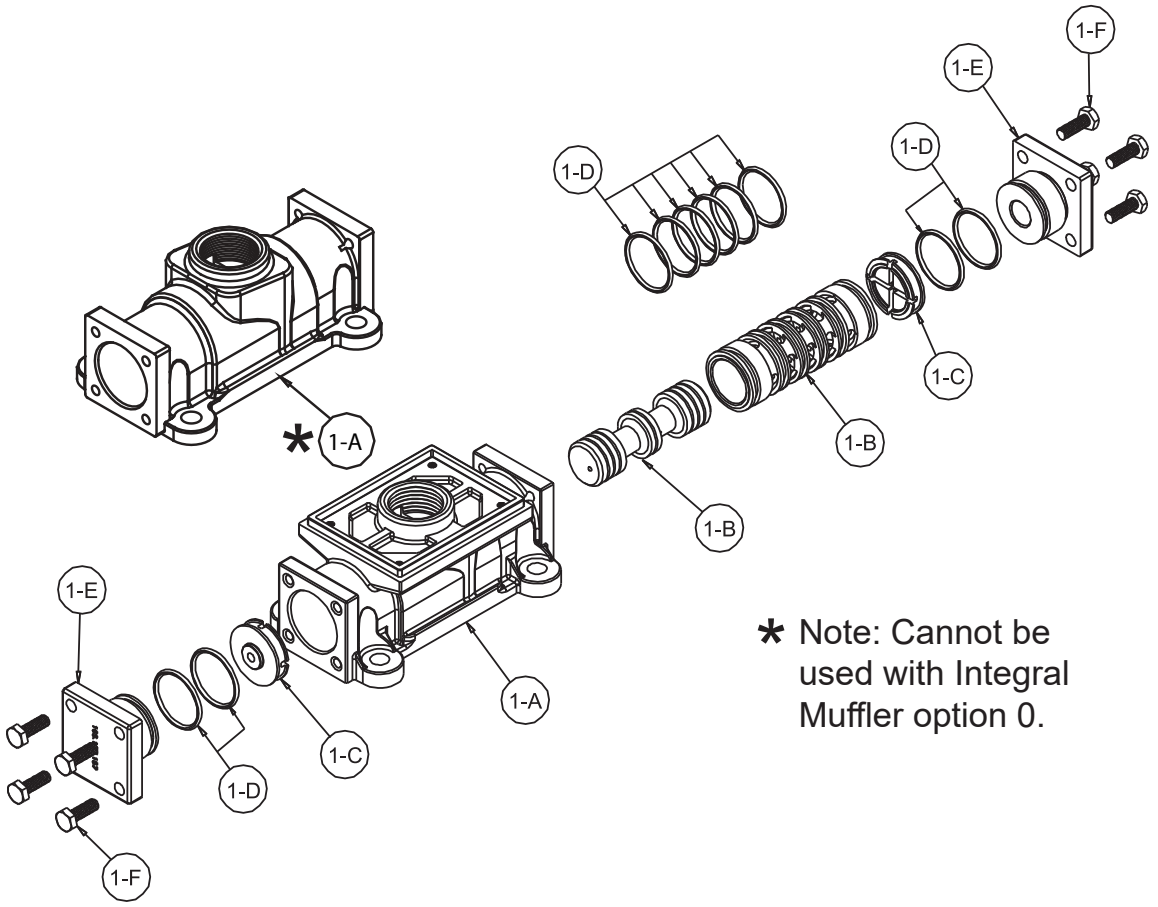

* Note: Cannot be used with Integral Muffler option 0.

Air Distribution Valve Servicing

See repair parts drawing, remove screws.

Step 1: Remove Hex Head Cap Screws (1-F).

Step 2: Remove end cap (1-E).

Step 3: Remove spool part of (1-B) (caution: do not scratch).

Step 4: Press sleeve (1-B) from body (1-A).

Step 5: Inspect O-Ring (1-D) and replace if necessary.

Step 6: Lightly lubricate O-Rings (1-D) on sleeve (1-B).

Step 7: Press sleeve (1-B) into body (1-A).

Step 8: Reassemble in reverse order, starting with step 3.

Note: Sleeve and spool (1-B) set is match ground to a specified clearance sleeve and spools (1-B) cannot be interchanged.

⚠ IMPORTANT

Read these instructions completely, before installation and start-up. It is the responsibility of the purchaser to retain this manual for reference. Failure to comply with the recommendations stated in this manual will damage the pump, and void factory warranty.

⚠ ATEX Compliant

Air Valve Assembly Parts List
(Use w/Aluminum centers only)

Item	Part Number	Description	Qty
⚠**1**	**031.183.000**	**Air Valve Assembly**	**1**
1-A	095.109.157	Body, Air Valve	1
1-B	031.139.000	Sleeve and Spool Set	1
1-C	132.029.552	Bumper	2
1-D	560.020.360	O-Ring	10
1-E	165.127.157	Cap, End	2
1-F	170.032.330	Hex Head Capscrew 1/4-20 x .75	8

Air Valve Assembly Parts List

⚠1	031.183.001	Air Valve Assembly	1
Consists of all components above except:			
1-F	170.032.115	Hex Head Capscrew 1/4-20 x .75	8

Air Valve Assembly Parts List
(Use w/Cast Iron and Stainless Steel centers only)

⚠Item	Part Number*	Description	Qty
1	**031.179.000**	**Air Valve Assembly**	**1**
1-A	095.109.110	Body, Air Valve	1
1-B	031.139.000	Sleeve and Spool Set	1
1-C	132.029.552	Bumper	2
1-D	560.020.360	O-Ring	10
1-E	165.127.110	Cap, End	2
1-F	170.032.115	Hex Head Capscrew 1/4-20 x .75	8

Air Valve with Stroke Indicator Assembly

Note: Stroke Indicator is standard on Spill Containment models

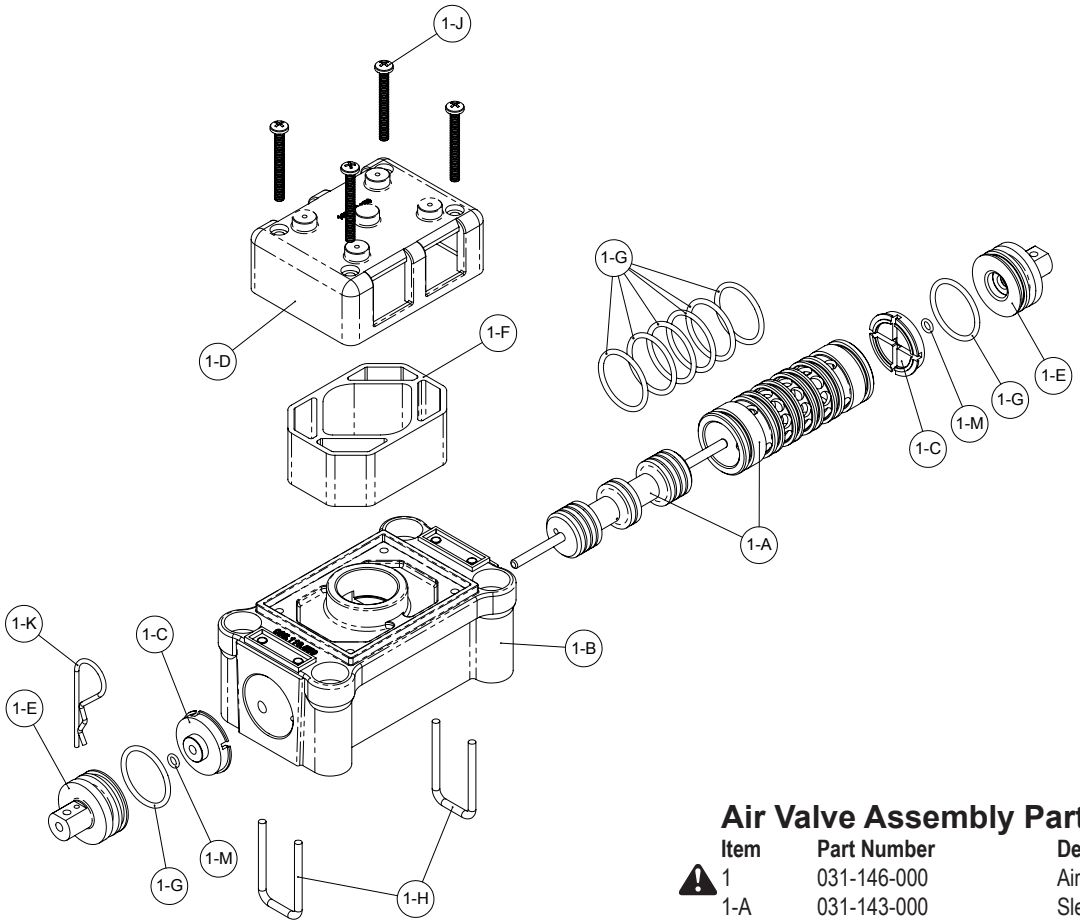

Air Distribution Valve Servicing

See repair parts drawing, remove screws.

Step 1: Remove staple retainer (1-H).

Step 2: Remove end cap (1-E), bumper (1-C).

Step 3: Remove spool part of (1-A) (caution, do not scratch).

Step 4: Press sleeve (1-A) from body (1-B).

Step 5: Inspect O-Ring (1-G) and replace if necessary.

Step 6: Lightly lubricate O-Rings (1-G) on sleeve (1-A).

Step 7: Press sleeve (1-A) into body (1-B).

Step 8: Reassemble in reverse order.

Note: Sleeve and spool (1-A) set is match ground to a specified clearance sleeve and spools (1-A) cannot be interchanged.

Air Valve Assembly Parts List

Item	Part Number	Description	Qty
⚠ 1	031-146-000	Air Valve Assembly	1
1-A	031-143-000	Sleeve and Spool Set w/Pins	1
1-B	095-119-559	Body, Air Valve	1
1-C	132-039-551	Bumper	2
1-D	165-096-559	Cap, Muffler	1
1-E	165-156-147	Cap, End	2
1-F	530-028-550	Muffler	1
1-G	560-020-360	O-Ring	8
1-H	675-068-115	Staple	2
1-J	710-015-115	Screw, Self-Tapping	4
1-K	210-008-330	Clip, Safety	1
1-M	560-029-360	O-Ring	2

For Pumps with PTFE Coated Hardware:

1	031-146-002	Air Valve Assembly	1
1-J	710-015-308	Screw, Self Tapping	4

(includes all other items on 031-146-000 above)

For Pumps with Piped Exhaust:

⚠ 1	031-147-000	Air Valve Assembly	1

(includes all items on 031-146-000 minus 1-D, 1-F, & 1-J)

ATEX Compliant

Pilot Valve Assembly

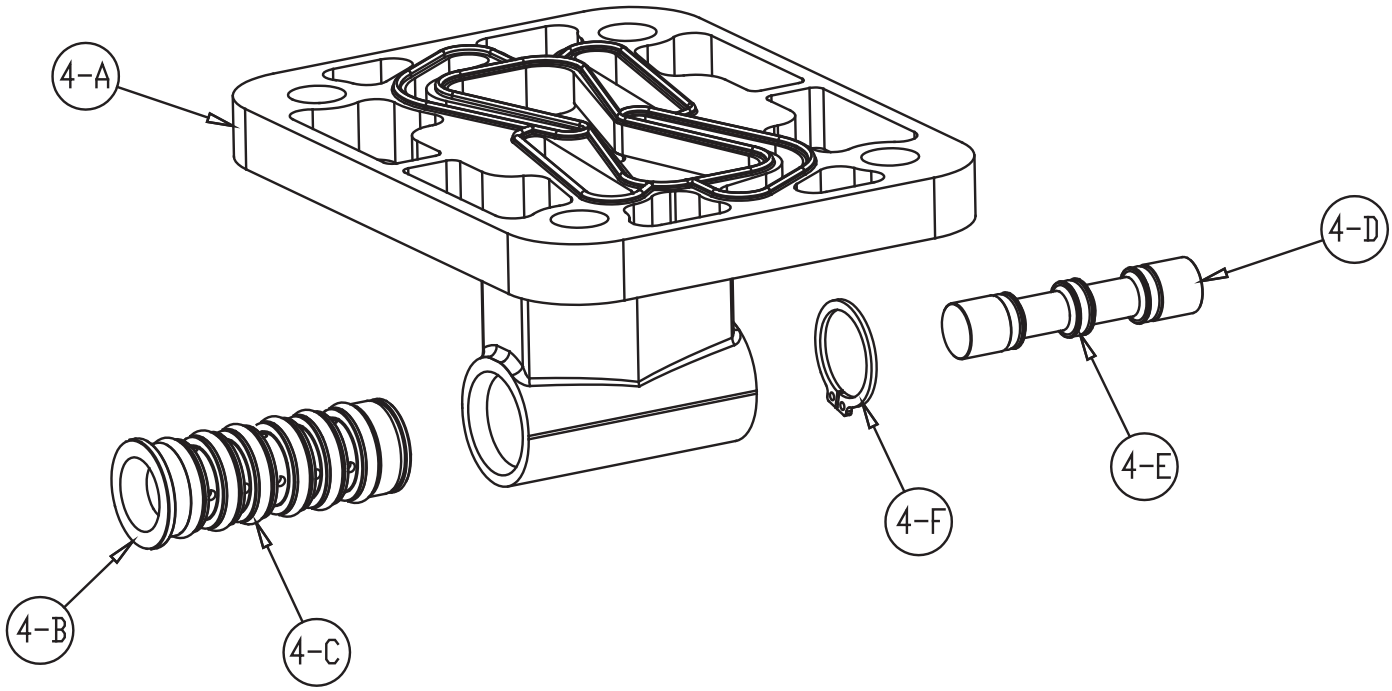

Pilot Valve Servicing

With Pilot Valve removed from pump.

Step 1: Remove snap ring (4-F).

Step 2: Remove sleeve (4-B), inspect O-Rings (4-C), replace if required.

Step 3: Remove spool (4-D) from sleeve (4-B), inspect O-Rings (4E), replace if required.

Step 4: Lightly lubricate O-Rings (4-C) and (4-E).

Reassemble in reverse order.

Pilot Valve Assembly Parts List

Item	Part Number	Description	Qty
4	095.110.000	Pilot Valve Assembly	1
4-A	095.095.157	Valve Body	1
4-B	755.052.000	Sleeve (With O-Rings)	1
4-C	560.033.360	O-Ring (Sleeve)	6
4-D	775.055.000	Spool (With O-Rings)	1
4-E	560.023.360	O-Ring (Spool)	3
4-F	675.037.080	Retaining Ring	1

For Pumps with Cast Iron Center Section

Item	Part Number	Description	Qty
4	095.110.558	Pilot Valve Assembly	1
4-A	095.095.558	Valve Body	1

(includes all other items used on 095.110.000)

For Pumps with Stainless Steel Center Section

Item	Part Number	Description	Qty
4	095.110.110	Pilot Valve Assembly	1
4-A	095.095.110	Valve Body	1

(includes all other items used on 095.110.000)

Intermediate Assembly

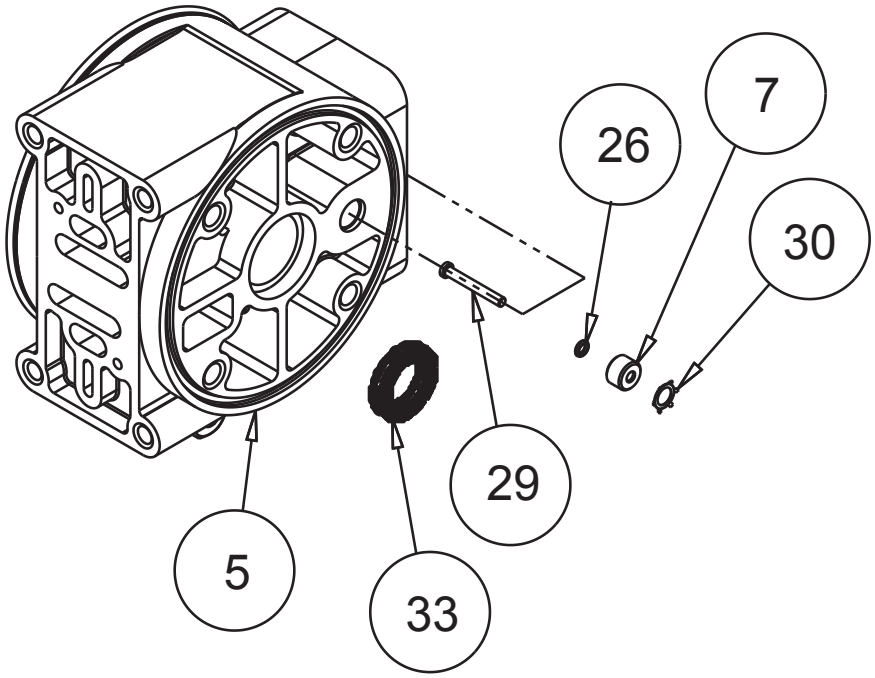

Intermediate Assembly Drawing

Step 1: Remove plunger, actuator (30) from center of intermediate pilot valve cavity.

Step 2: Remove Ring, Retaining (31), discard.

Step 3: Remove bushing, plunger (7), inspect for wear and replace if necessary with genuine parts.

Step 4: Remove O-Ring (26), inspect for wear and replace if necessary with genuine parts.

Step 5: Lightly lubricate O-Ring (26) and insert into intermediate.

Step 6: Reassemble in reverse order.

Step 7: Remove Seal, Diaphragm Rod (33).

Step 8: Clean seal area, lightly lubricate and install new Seal, Diaphragm Rod (33).

Intermediate Repair Parts List

Item	Part Number	Description	Qty
5	114.024.157	Bracket, Intermediate	1
	114.024.010	Bracket, Intermediate	1
	114.024.110	Bracket, Intermediate	1
7	135.034.506	Bushing, Plunger	2
26	560.001.360	O-Ring	2
30	620.020.115	Plunger, Actuator	2
31	675.042.115	Ring, Retaining*	2
33	720.004.360	Seal, Diaphragm Rod	2

***Note:** It is recommended that when plunger components are serviced, new retaining rings be installed.

⚠ IMPORTANT



When the pumped product source is at a higher level than the pump (flooded suction condition), pipe the exhaust higher than the product source to prevent siphoning spills. In the event of a diaphragm failure a complete rebuild of the center section is recommended.

Diaphragm Service Drawing, with Overlay

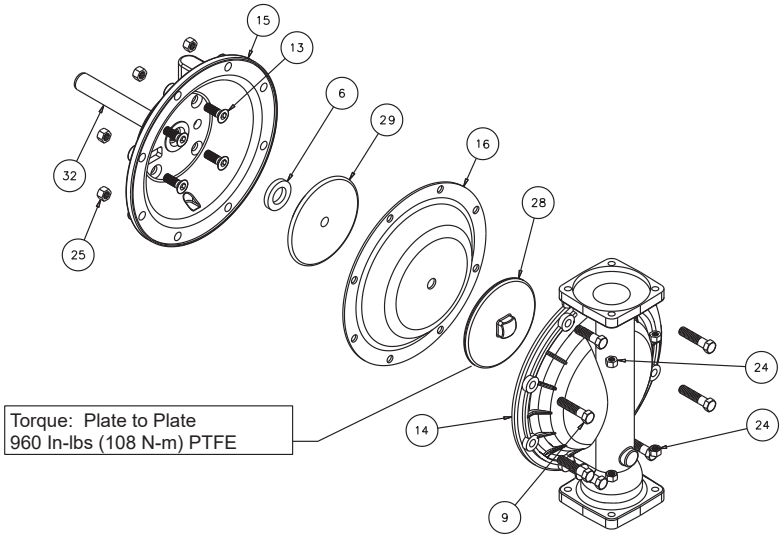

Diaphragm Service Drawing, Non-Overlay

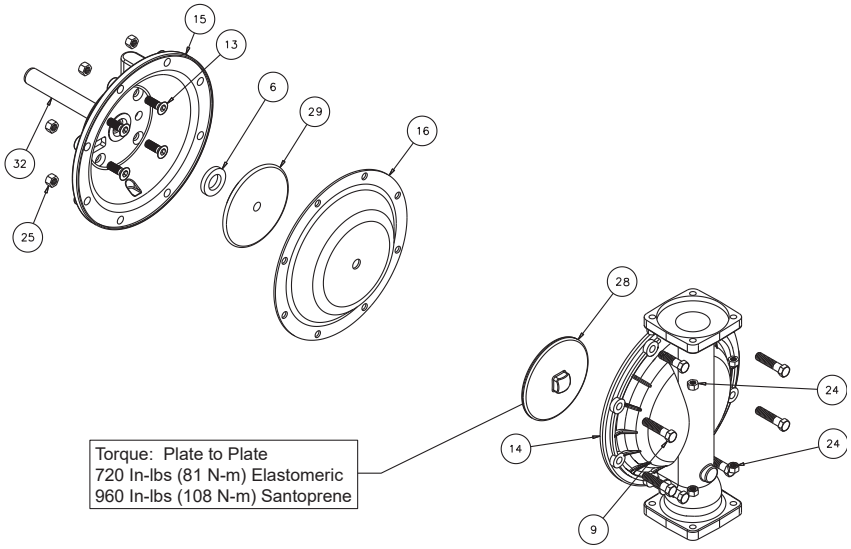

One-Piece Bonded
*Diaphragm Service Drawing

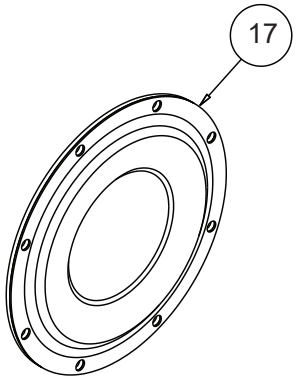

***Available For Field Conversion From Overlay To One-Piece Bonded Diaphragm Kits:**

Kit:	**475-254-000**	
2	286-113-000	One-Piece Diaphragm
2	612-217-150	Inner Plates

Diaphragm Servicing

Step 1: With manifolds and outer chambers removed, remove diaphragm assemblies from diaphragm rod. **DO NOT** use a pipe wrench or similar tool to remove assembly from rod. Flaws in the rod surface may damage bearings and seal. Soft jaws in a vise are recommended to prevent diaphragm rod damage.

Step 1.A: NOTE: Not all inner diaphragm plates are threaded. Some models utilize a through hole in the inner diaphragm plate. If required to separate diaphragm assembly, place assembly in a vise, gripping on the exterior cast diameter of the inner plate. Turn the outer plate clockwise to separate the assembly.

Always inspect diaphragms for wear cracks or chemical attack. Inspect inner and outer plates for deformities, rust scale and wear. Inspect intermediate bearings for elongation and wear. Inspect diaphragm rod for wear or marks.
Clean or repair if appropriate. Replace as required.

Step 2: Reassembly: There are two different types of diaphragm plate assemblies utilized throughout the Sandpiper product line: Outer plate with a threaded stud, diaphragm, and a threaded inner plate.

Outer plate with a threaded stud, diaphragm, and an inner plate with through hole. Secure threaded inner plate in a vise. Ensure that the plates are being installed with the outer radius against the diaphragm.

Step 3: Lightly lubricate, with a compatible material, the inner faces of both outer and inner diaphragm plates when using on non Overlay diaphragms (For EPDM water is recommended). No lubrication is required.

Step 4: Push the threaded outer diaphragm plate through the center hole of the diaphragm. **Note:** Most diaphragms are installed with the natural bulge out towards the fluid side. S05, S07, and S10 non–metallic units are installed with the natural bulge in towards the air side.

Step 5: Thread or place, outer plate stud into the inner plate. For threaded inner plates, use a torque wrench to tighten the assembly together. Torque values are called out on the exploded view.

Repeat procedure for second side assembly. Allow a minimum of 15 minutes to elapse after torquing, then re-torque the assembly to compensate for stress relaxation in the clamped assembly.

Step 6: Thread one assembly onto the diaphragm rod with sealing washer (when used) and bumper.

Step 7: Install diaphragm rod assembly into pump and secure by installing the outer chamber in place and tightening the capscrews.

Step 8: On opposite side of pump, thread the remaining assembly onto the diaphragm rod. Using a torque wrench, tighten the assembly to the diaphragm rod. Align diaphragm through bolt holes, always going forward past the recommended torque. Torque values are called out on the exploded view. **NEVER** reverse to align holes, if alignment cannot be achieved without damage to diaphragm, loosen complete assemblies, rotate diaphragm and reassemble as described above.

Step 9: Complete assembly of entire unit.
One Piece Diaphragm Servicing (Bonded PTFE with integral plate) The One Piece diaphragm has a threaded stud installed in the integral plate at the factory. The inner diaphragm plate has a through hole instead of a threaded hole. Place the inner plate over the diaphragm stud and thread the first diaphragm / inner plate onto the diaphragm rod only until the inner plate contacts the rod. Do not tighten. A small amount of grease may be applied between the inner plate and the diaphragm to facilitate assembly. Insert the diaphragm / rod assembly into the pump and install the outer chamber. Turn the pump over and thread the second diaphragm / inner plate onto the diaphragm rod. Turn the diaphragm until the inner plate contacts the rod and hand tighten the assembly. Continue tightening until the bolt holes align with the inner chamber holes. **DO NOT LEAVE THE ASSEMBLY LOOSE.**

⚠ IMPORTANT



Read these instructions completely, before installation and start-up. It is the responsibility of the purchaser to retain this manual for reference. Failure to comply with the recommendations stated in this manual will damage the pump, and void factory warranty.

Solenoid Shifted Air Valve

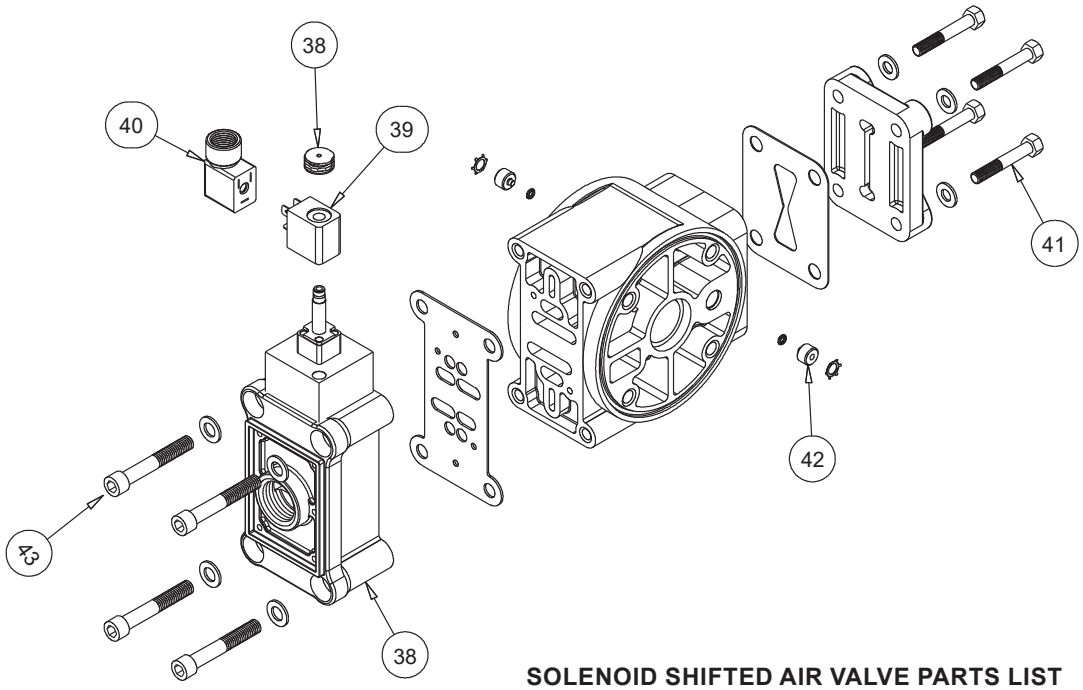

Solenoid Shifted Air Distribution Valve Option

Warren Rupp's solenoid shifted, air distribution valve option utilizes electrical signals to precisely control your SANDPIPER's speed. The solenoid coil is connected to a customer - supplied control. Compressed air provides the pumping power, while electrical signals control pump speed (pumping rate).

Operation

The Solenoid Shifted SANDPIPER has a solenoid operated, air distribution valve in place of the standard SANDPIPER's pilot operated, air distribution valve. Where a pilot valve is normally utilized to cycle the pump's air distribution valve, an electric solenoid is utilized. As the solenoid is powered, one of the pump's air chambers is pressurized while the other chamber is exhausted. When electric power is turned off, the solenoid shifts and the pressurized chamber is exhausted while the other chamber is pressurized. By alternately applying and removing power to the solenoid, the pump cycles much like a standard SANDPIPER pump, with one exception. This option provides a way to precisely control and monitor pump speed.

Before Installation

Before wiring the solenoid, make certain it is compatible with your system voltage.

SOLENOID SHIFTED AIR VALVE PARTS LIST

(Includes all items used on Composite Repair Parts List except as shown)

Item	Part Number	Description	Qty
38	893-097-000	Solenoid Valve, NEMA4	1
39	219-001-000	Solenoid Coil, 24VDC	1
	219-004-000	Solenoid Coil, 24VAC/12VDC	1
	219-002-000	Solenoid Coil, 120VAC	1
	219-003-000	Solenoid Coil, 240VAC	1
40	241-001-000	Connector, conduit	1
	241-003-000	Conduit Connector with Suppression Diode (DC Only)	1
41	170-029-330	Capscrew, Hex HD 5/16-18 x 1.50	4
42	618-051-150	Plug	2
43	171-053-330	Capscrew, Socket Head	4

FM APPROVED IEC EEX m T4

△ **For Explosion Proof Solenoid Coils used in North America and outside the European Union.**

39	219-009-001	Solenoid Coil, 120VAC 60 Hz	1
	219-009-002	Solenoid Coil, 240VAC 60 Hz	1
	219-009-003	Solenoid Coil, 12VDC	1
	219-009-004	Solenoid Coil, 24VDC	1
	219-009-005	Solenoid Coil, 110VAC 50 Hz	1
	219-009-006	Solenoid Coil, 230VAC 50 Hz	1

Note: Item 40 (Conduit Connector) is not required

*Special Conditions For Safe Use

A fuse corresponding to its rated current (max. $3*I_{rat}$ according IEC 60127-2-1) or a motor protecting switch with short-circuit and thermal instantaneous tripping (set to rated current) shall be connected in series to each solenoid as short circuit protection. For very low rated currents of the solenoid the fuse of lowest current value according to the indicated IEC standard will be sufficient. The fuse may be accommodated in the associated supply unit or shall be separately arranged. The rated voltage to the fuse shall be equal to or greater than the stated rated voltage of the magnet coil. The breakage capacity of the fuse-link shall be as high as or higher than the maximum expected short circuit current at the location of the installation (usually 1500 A). A maximum permissible ripple of 20% is valid for all magnets of direct-current design.

Ex II 2G EEx m c II T5
II 2D c IP65 T100°C

*◆ **For ATEX Compliant Solenoid Coils used in the European Union**

39	219-011-001	Solenoid Coil, Single mounting 12 VDC, 3.3W / 267mA	1
	219-011-002	Solenoid Coil, Single mounting 24 VDC, 3.3W / 136mA	1
	219-011-003	Solenoid Coil, Single mounting 110/120 VAC, 3.4W / 29mA	1
	219-011-004	Solenoid Coil, Single mounting 220/240 VAC, 3.4W / 15mA	1

Note: Item 35 (Conduit Connector) is not required

Compressed Air Temperature Range: Maximum Ambient Temperature to plus 50°C

5 - YEAR Limited Product Warranty

Warren Rupp, Inc. ("Warren Rupp") warrants to the original end-use purchaser that no product sold by Warren Rupp that bears a Warren Rupp brand shall fail under normal use and service due to a defect in material or workmanship within five years from the date of shipment from Warren Rupp's factory. Warren Rupp brands include Warren Rupp®,SANDPIPER®, SANDPIPER Signature Series™, MARATHON®, Porta-Pump®, SludgeMaster™ and Tranquilizer®.

The use of non-OEM replacement parts will void (or negate) agency certifications, including CE, ATEX, CSA, 3A and EC1935 compliance (Food Contact Materials). Warren Rupp, Inc. cannot ensure nor warrant non-OEM parts to meet the stringent requirements of the certifying agencies.

~ See complete warranty at https://www.sandpiperpump.com/

SANDPIPER®

EC Declaration of Conformity

Manufacturer:
Warren Rupp, Inc.
800 N. Main Street
Mansfield, Ohio, 44902 USA

Certifies that Air-Operated Double Diaphragm Pump Models: DSB Series, DMF Series, G Series, HDB Series, HDF Series, HP Series, F Series, MS Series, S Series, SL Series, SP Series, SSB Series, T Series, U1F Series, WR Series; High Pressure Pump Models: EH Series, GH Series, SH Series; Submersible Pump Models: SMA3 Series, SPA Series; and Surge Dampener/ Suppressor Models: DA Series, TA Series comply with the European Community Directive 2006/42/EC on Machinery, according to Annex VIII. This product has used Harmonized Standard EN809:2012, Pumps and Pump Units for Liquids - Common Safety Requirements, to verify conformance.

October 3, 2022
DATE/APPROVAL/TITLE:

Technical File on record with:
DEKRA Certification B.V.
Meander 1051
6825 MJ Arnhem
The Netherlands

Signature of authorized person

Dennis Hall
Printed name of authorized person

Engineering Manager
Title

IDEX

CE

SANDPIPER®

EC Declaration of Conformity

Manufacturer:
Warren Rupp, Inc.
800 N. Main Street
Mansfield, Ohio, 44902 USA

Certifies that Air-Operated Double Diaphragm Pump Models: DSB Series, DMF Series, G Series, HDB Series, HDF Series, HP Series, F Series, MS Series, S Series, SL Series, SP Series, SSB Series, T Series, U1F Series, WR Series; High Pressure Pump Models: EH Series, GH Series, SH Series; Submersible Pump Models: SMA3 Series, SPA Series; and Surge Dampener/ Suppressor Models: DA Series, TA Series comply with the United Kingdom Statutory Instruments 2008 No. 1597, The Supply of Machinery (Safety) Regulations 2008, according to Annex VIII. This product has used Designated Standard EN809:2012, Pumps and Pump Units for Liquids - Common Safety Requirements, to verify conformance.

October 17, 2022
DATE/APPROVAL/TITLE:

Technical File on record with:
DEKRA Certification UK Limited
Stokenchurch House
Oxford Road
Stokenchurch
HP14 3SX

Signature of authorized person

Dennis Hall
Printed name of authorized person

Engineering Manager
Title

IDEX

UK CA

SANDPIPER® **ATEX** IDEX

EU Declaration of Conformity

Manufacturer:
Warren Rupp, Inc.
A Unit of IDEX Corporation
800 North Main Street
Mansfield, OH 44902 USA

This declaration of conformity is issued under the sole responsibility of the manufacturer. Warren Rupp, Inc. declares that Air Operated Double Diaphragm Pumps (AODD) and Surge Suppressors listed below comply with the requirements of Directive **2014/34/EU** and applicable harmonized standards.

Harmonized Standards:
- EN ISO 80079-36: 2016
- EN ISO 80079-37: 2016
- EN 60079-25: 2010

1. AODD Pumps and Surge Suppressors - Technical File on record with: DEKRA Certification B.V.
Meander 1051
6825 MJ Arnhem
The Netherlands

Hazardous Location Applied:

Ⓔx II 2 G Ex h IIC T5...225°C (T2) Gb
II 2 D Ex h IIIC T100°C...T200°C Db
- Metallic pump models with external aluminum components (DMF Series, EH Series, F Series, G & GH Series, HDB Series, HDF Series, MS Series, S Series, SH Series, SL Series, SPB Series, ST Series, T Series, and U1F Series)
- Conductive plastic pump models with integral muffler (PB1/4 Series, S Series, SL Series, SPE Series)
- Tranquilizer® surge suppressors (TA Series)

Ⓔx II 2 G Ex h IIB T5...225°C (T2) Gb
II 2 D Ex h IIIB T100°C...T200°C Db
- ST Series with sight tubes (VL) and HP Series because of the projected area of non-conductive external components

2. AODD Pumps - EU Type Examination Certificate No.: DEKRA 18ATEX0094X - DEKRA Certification B.V. (0344)
Meander 1051
6825 MJ Arnhem
The Netherlands

Hazardous Location Applied:

Ⓔx I M1 Ex h I Ma
II 1 G Ex h IIC T5...225°C (T2) Ga
II 1 D Ex h IIIC T100°C...T200°C Da
- Metallic pump models with no external aluminum (HDB Series, HDF Series, G Series, S Series, SPB Series)
- Conductive plastic pumps equipped with conductive muffler (S Series, SPE Series)

Ⓔx II 2 G Ex h ia IIC T5 Gb
II 2 D Ex h ia IIIC T100°C Db
- Pump models with ATEX rated pulse output kit option (HDB Series, HDF Series, PB1/4, S Series, SB Series)

Ⓔx II 2 G Ex h mb IIC T5 Gb
II 2 D Ex h mb tb IIIC T100° Db
- Pump model series S05, S1F, S15, S20, S30 equipped with ATEX rated integral solenoid option

➢ See “ATEX Details” page in user’s manual for more information
➢ See “Safety Information” page for conditions of safe use

DATE/APPROVAL/TITLE:
9 NOV 2023

Dennis Hall
Engineering Manager

B

SANDPIPER®

UKEx

IDEX

EU Declaration of Conformity

Manufacturer:

Warren Rupp, Inc.
A Unit of IDEX Corporation
800 North Main Street
Mansfield, OH 44902 USA

This declaration of conformity is issued under the sole responsibility of the manufacturer.
Warren Rupp, Inc declares that Air Operated Double Diaphragm Pumps (AODD) and Surge Suppressors listed below comply with the requirements of United Kingdom Statutory Instruments **2016 No. 1107** and all the applicable standards.

Designated Standards:

- EN ISO 80079-36: 2016
- EN ISO 80079-37: 2016
- EN 60079-25: 2010

1. AODD Pumps and Surge Suppressors - Technical File on record with: DEKRA Certification UK Limited
Stokenchurch House
Oxford Road
Stokenchurch
HP14 3SX

Hazardous Location Applied:



II 2 G Ex h IIC T5...225°C (T2) Gb
II 2 D Ex h IIIC T100°C...T200°C Db

- Metallic pump models with external aluminum components (DMF Series, EH Series, F Series, G & GH Series, HDB Series, HDF Series, MS Series, S Series, SH Series, SL Series, SPB Series, ST Series, T Series, and U1F Series)
- Conductive plastic pump models with integral muffler (PB1/4 Series, S Series, SL Series, SPE Series)
- Tranquilizer® surge suppressors (TA Series)



II 2 G Ex h IIB T5...225°C (T2) Gb
II 2 D Ex h IIIB T100°C...T200°C Db

- ST Series with sight tubes (VL) and HP Series because of the projected area of non-conductive external components

➢ See “ATEX Details” page in user’s manual for more information
➢ See “Safety Information” page for conditions of safe use

DATE/APPROVAL/TITLE:
9 NOV 2023

Dennis Hall
Engineering Manager