SERVICE & OPERATING MANUAL

Original Instructions

Certified Quality

ISO 9001 Certified
ISO 14001 Certified

Model S1F

Non-Metallic
Design Level 3

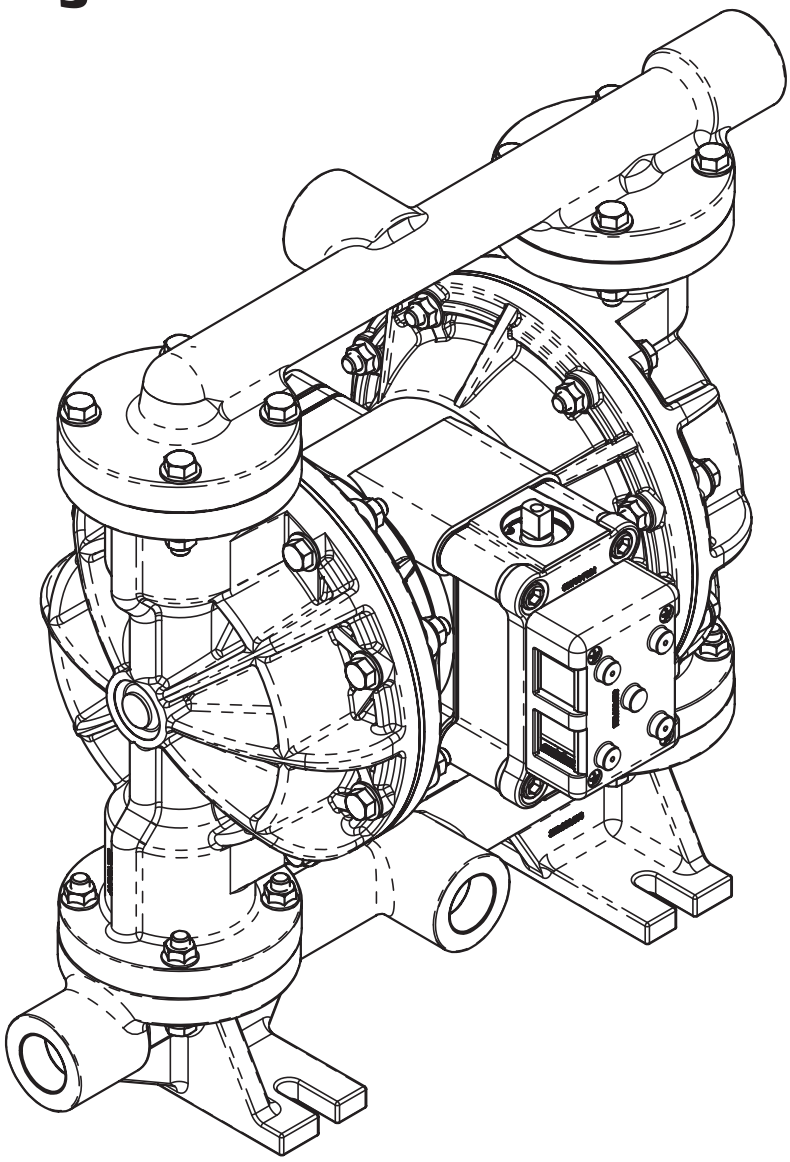

Warren Rupp, Inc.
A Unit of IDEX Corporation
800 N. Main St.,
Mansfield, Ohio 44902 USA
Telephone (419) 524.8388
Fax (419) 522.7867
SANDPIPERPUMP.COM

© Copyright 2022 Warren Rupp, Inc.
All rights reserved

SANDPIPER®
A WARREN RUPP, INC. BRAND
SANDPIPERPUMP.COM

Safety Information

⚠ IMPORTANT



Read the safety warnings and instructions in this manual before pump installation and start-up. Failure to comply with the recommendations stated in this manual could damage the pump and void factory warranty.



When the pump is used for materials that tend to settle out or solidify, the pump should be flushed after each use to prevent damage. In freezing temperatures the pump should be completely drained between uses.

⚠ CAUTION



Before pump operation, inspect all fasteners for loosening caused by gasket creep. Retighten loose fasteners to prevent leakage. Follow recommended torques stated in this manual.



Nonmetallic pumps and plastic components are not UV stabilized. Ultraviolet radiation can damage these parts and negatively affect material properties. Do not expose to UV light for extended periods of time.



WARNING
Pump not designed, tested or certified to be powered by compressed natural gas. Powering the pump with natural gas will void the warranty.



WARNING
The use of non-OEM replacement parts will void (or negate) agency certifications, including CE, ATEX, CSA, 3A and EC1935 compliance (Food Contact Materials). Warren Rupp, Inc. cannot ensure nor warrant non-OEM parts to meet the stringent requirements of the certifying agencies.

⚠ WARNING



When used for toxic or aggressive fluids, the pump should always be flushed clean prior to disassembly.



Before maintenance or repair, shut off the compressed air line, bleed the pressure, and disconnect the air line from the pump. Be certain that approved eye protection and protective clothing are worn at all times. Failure to follow these recommendations may result in serious injury or death.



Airborne particles and loud noise hazards. Wear eye and ear protection.



In the event of diaphragm rupture, pumped material may enter the air end of the pump, and be discharged into the atmosphere. If pumping a product that is hazardous or toxic, the air exhaust must be piped to an appropriate area for safe containment.



Take action to prevent static sparking. Fire or explosion can result, especially when handling flammable liquids. The pump, piping, valves, containers and other miscellaneous equipment must be properly grounded.



This pump is pressurized internally with air pressure during operation. Make certain that all fasteners and piping connections are in good condition and are reinstalled properly during reassembly.



Use safe practices when lifting

ATEX Pumps - Conditions For Safe Use

1. Ambient temperature range is as specified in tables 1 to 3 on the next page *(per Annex I of DEKRA 18ATEX0094X)*

2. ATEX compliant pumps are suitable for use in explosive atmospheres when the equipment is properly grounded in accordance with local electrical codes

3. **Non-Metallic ATEX Pumps only — See Explanation of Pump Nomenclature / ATEX Details Page**
   Conductive Polypropylene, conductive Acetal or conductive PVDF pumps are not to be installed in applications where the pumps may be subjected to oil, greases and hydraulic liquids.

4. The optionally provided solenoids shall be protected by a fuse corresponding to its rated current (max 3*Irat according to EN 60127) or by a motor protecting switch with short circuit and thermal instantaneous tripping (set to the rated current) as short circuit protection. For solenoids with a very low rated current, a fuse with the lowest current value according to the indicated standard will be sufficient. The fuse may be accommodated in the associated supply unit or shall be separately arranged. The rated voltage of the fuse shall be equal or greater than the stated rated voltage of the solenoid. The breaking capacity of the fuse shall be as high as or higher than the maximum expected short circuit current at the location of the installation (usually 1500 A). The maximum permissible ripple is 20% for all dc solenoids.
   ***Not applicable for all pump models — See Explanation of Pump Nomenclature / ATEX Details Page**

5. When operating pumps equipped with non-conductive diaphragms that exceed the maximum permissible projected area, as defined in EN ISO 80079-36 : 2016 section 6.7.5 table 8, the following protection methods must be applied
   - Equipment is always used to transfer electrically conductive fluids or
   - Explosive environment is prevented from entering the internal portions of the pump, i.e. dry running.

6. Pumps provided with the pulse output kit and used in the potentially explosive atmosphere caused by the presence of the combustible dust shall be installed in such a way that the pulse output kit is protected against impact
   ***Not applicable for all pump models — See Explanation of Pump Nomenclature / ATEX Details Page**

Temperature Tables

Table 1. Category 1 & Category 2 ATEX Rated Pumps

Ambient Temperature Range [°C]	Process Temperature Range [°C][1]	Temperature Class	Maximum Surface Temperature [°C]
-20°C to +60°C	-20°C to +80°C	T5	T100°C
	-20°C to +108°C	T4	T135°C
	-20°C to + 160°C	T3	T200°C
	-20°C to +177°C	(225°C) T2	

[1]Per CSA standards ANSI LC6-2018 US & Canadian Technical Letter R14, G-Series Natural Gas Models are restricted to (-20°C to + 80°C) process temperature

Table 2. Category 2 ATEX Rated Pumps Equipped with Pulse Output Kit or Integral Solenoid:

Ambient Temperature Range [°C]	Process Temperature Range [°C]	Temperature Class	Maximum Surface Temperature [°C]	Options	
				Pulse Output Kit	Integral Solenoid
-20°C to +60°C	-20°C to +100°C	T5	T100	X	
-20°C to +50°C	-20°C to +100°C	T5	T100		X

[2]ATEX Pulse output or Intergral Solenoid Not Available For All Pump Models See Explanation of Pump Nomenclature / ATEX Details Page

Table 3. Category M1 ATEX Rated Pumps for Mining

Ambient Temperature Range [°C]	Process Temperature Range [°C]
-20°C to +60°C	-20°C to +150°C

Note: The ambient temperature range and the process temperature range should not exceed the operating temperature range of the applied non-metallic parts as listed in the manuals of the pumps.

Table of Contents

SECTION 1: PUMP SPECIFICATIONS.....1
- Explanation of Nomenclature
- Performance
- Materials
- Dimensional Drawings

SECTION 2: INSTALLATION & OPERATION ...5
- Principle of Pump Operation
- Recommended Installation Guide
- Troubleshooting Guide

SECTION 3: EXPLODED VIEW.....8
- Composite Repair Parts Drawing
- Composite Repair Parts List
- Material Codes
- Option For Virgin PTFE & TPE Equipped Pumps Drawing

SECTION 4: AIR END 13
- Air Distribution Valve Assembly
- Air Valve with Stroke Indicator Assembly
- Pilot Valve Assembly
- Intermediate Assembly

SECTION 5: WET END.....17
- Diaphragm Drawings
- Diaphragm Servicing

SECTION 6: OPTIONAL CONFIGURATIONS .19
- Solenoid Shifted Air Valve
- Dual Port
- Electronic Leak Detector Installation Instructions

SECTION 7: WARRANTY & CERTIFICATES ..22
- Warranty
- CE Declaration of Conformity - Machinery
- ATEX Declaration of Conformity

Explanation of Pump Nomenclature

Your Model #: S _____ _____ _____ _____ _____ _____ _____ _____ _____ _____ _____
(fill in from pump nameplate)

Pump Brand	Pump Size	Check Valve	Design Level	Wetted Material	Diaphragm/ Check Valve	Check Valve Seat	Non-Wetted Material	Porting Options	Pump Style	Pump Options	Kit Options
Model #: S	XX	X	X	X	X	X	X	X	X	X	XX

Pump Brand
S SANDPIPER®

Pump Size
1F 1" Full Flow

Check Valve Type
B Ball

Design Level
3 Design Level

Wetted Material
K PVDF
P Polypropylene
C Conductive Polypropylene
V Conductive PVDF

Diaphragm/Check Valve Materials
1 Santoprene/Santoprene
2 PTFE Santoprene Backup/PTFE
3 PTFE Pumping, PTFE-Santoprene Backup Driver/PTFE
4 Santoprene Pumping/Santoprene
B Nitrile/Nitrile
G PTFE-Neoprene Backup/PTFE
M Santoprene/PTFE
N Neoprene/Neoprene
V FKM/FKM
Y PTFE Pumping/One-Piece Bonded Driver/PTFE
Z One-Piece Bonded/PTFE

Check Valve Seat
K PVDF
P Polypropylene

Non-Wetted Material Options
P Polypropylene
1 40% Glass Filled Polypropylene with PTFE hardware
C Conductive Polypropylene

Porting Options
N NPT Thread
U Universal (Fits ANSI and DIN)
7 Dual Porting (ANSI)
8 Top Dual Porting (ANSI)
9 Bottom Dual Porting (ANSI)

Pump Style
D With Electronic Leak Detection (110 V)
E With Electronic Leak Detection (220V)
I Inline Porting NPT Threads
M With Mechanical Leak Detection
S Standard
V With Visual Leak Detection

Pump Options
0 None
6 Threaded Muffler (Conductive)

Kit Options
00. None
P0. 10.30VDC Pulse Output Kit
P1. Intrinsically-Safe 5.30VDC, 110/120VAC 220/240 VAC Pulse Output Kit
P2. 110/120 or 220/240VAC Pulse Output Kit

Kit Options (cont.)
E0. Solenoid Kit with 24VDC Coil
E1. Solenoid Kit with 24VDC Explosion-Proof Coil
E2. Solenoid Kit with 24VAC/12VDC Coil
E3. Solenoid Kit with 12VDC Explosion-Proof Coil
E4. Solenoid Kit with 110VAC Coil
E5. Solenoid Kit with 110VAC Explosion-Proof Coil
E6. Solenoid Kit with 220VAC Coil
E7. Solenoid Kit with 220VAC Explosion-Proof Coil
E8. Solenoid Kit with 110VAC, 50 Hz Explosion-Proof Coil
E9. Solenoid Kit with 230VAC, 50 Hz Explosion-Proof Coil
SP. Stroke Indicator Pins

A1. Solenoid Kit with 12 VDC ATEX Compliant Coil
A2. Solenoid Kit with 24 VDC ATEX Compliant Coil
A3. Solenoid Kit with 110/120 VAC 50/60 Hz ATEX Compliant Coil
A4. Solenoid Kit with 220/240 VAC 50/60 Hz ATEX Compliant Coil

FM APPROVED IEC EEX m T4 CSA®

Note: Pump models equipped with these explosion-proof solenoid kit options E1, E3, E5, E7, E8 or E9, are certified and approved by the above agencies. They are NOT ATEX compliant.

Your Serial #: *(fill in from pump nameplate)* _____

Special Conditions For Safe Use: Conductive polypropylene, conductive acetal, or conductive PVDF pumps are not to be installed in applications where the pumps may be subjected to oil, greases and hydraulic liquids

ATEX Detail

	ATEX Details	Wetted Material Options	Non-Wetted Material Options	Pump Options	Kit Options
Ex	II 1 G Ex h IIC T5...225°C (T2) Ga II 1D Ex h IIIC T100°C...T200°C Da I M1 Ex h I Ma	C, V	C	6	00
	II 2 G Ex h IIC T5...225°C (T2) Gb II 2 D Ex h IIIC T100°C...T200°C Db	C, V	C	0, 6	00
	II 2 G Ex h ia IIC T5 Gb II 2 D Ex h ia IIIC T100°C Db	C, V	C	0, 6	P1
	II 2 G Ex h mb IIC T5 Gb II 2 D Ex h mb tb IIIC T100°C Db	C, V	C	0, 6	A1, A2, A3, A4

Performance

S1F NON-METALLIC

SUCTION/DISCHARGE PORT SIZE
- 1" ANSI Flange or PN10 25mm DIN Flange

CAPACITY
- 0 to 53 gallons per minute (0 to 200 liters per minute)

AIR DISTRIBUTION VALVE
- No-lube, no-stall design

SOLIDS-HANDLING
- Up to .25 in. (6mm)

HEADS UP TO
- 100 psi or 231 ft. of water (7 bar or 70 meters)

DISPLACEMENT/STROKE
- .19 Gallon / .72 liter

MAXIMUM OPERATING PRESSURE
- 100 psi (7 bar)

SHIPPING WEIGHT
- Polypropylene 42 lbs. (19kg)
- PVDF 54 lbs. (24kg)

Performance based on the following: elastomer fitted pump, flooded suction, water at ambient conditions.
The use of other materials and varying hydraulic conditions may result in deviations in excess of 5%.

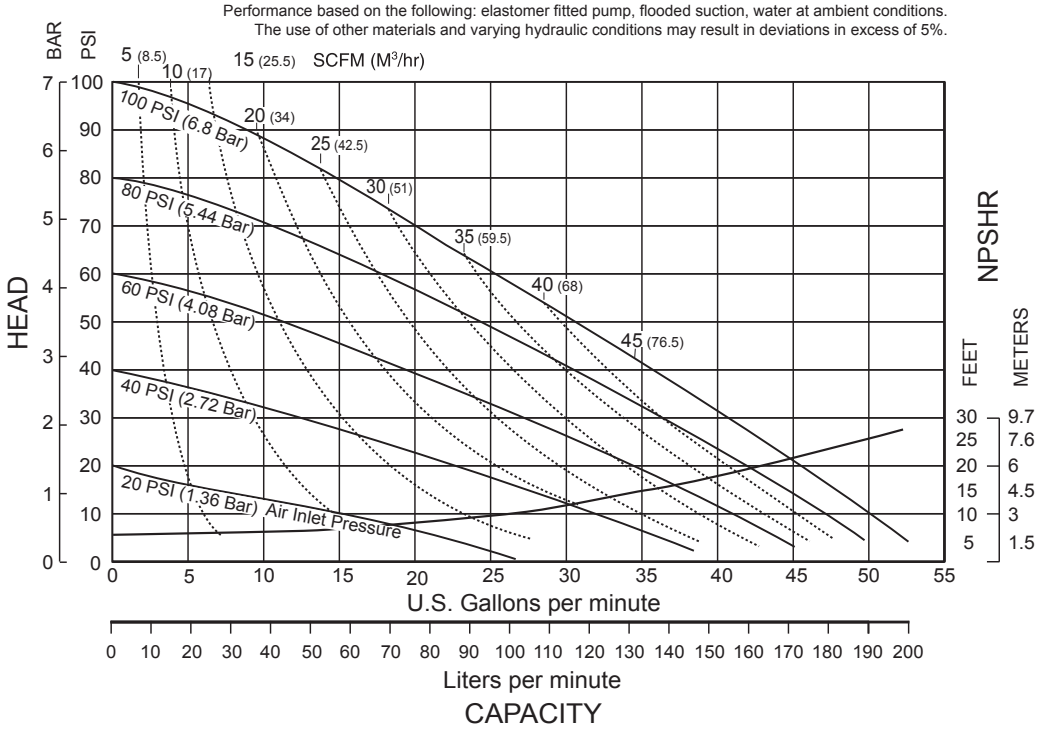

Materials

Material Profile:	Operating Temperatures:	
⚠ *CAUTION! Operating temperature limitations are as follows:*	Max.	Min.
Conductive Acetal: Tough, impact resistant, ductile. Good abrasion resistance and low friction surface. Generally inert, with good chemical resistance except for strong acids and oxidizing agents.	190°F 88°C	-20°F -29°C
EPDM: Shows very good water and chemical resistance. Has poor resistance to oils and solvents, but is fair in ketones and alcohols.	280°F 138°C	-40°F -40°C
FKM: (Fluorocarbon) Shows good resistance to a wide range of oils and solvents; especially all aliphatic, aromatic and halogenated hydrocarbons, acids, animal and vegetable oils. Hot water or hot aqueous solutions (over 70°F(21°C)) will attack FKM.	350°F 177°C	-40°F -40°C
Hytrel®: Good on acids, bases, amines and glycols at room temperatures only.	220°F 104°C	-20°F -29°C
Neoprene: All purpose. Resistance to vegetable oils. Generally not affected by moderate chemicals, fats, greases and many oils and solvents. Generally attacked by strong oxidizing acids, ketones, esters and nitro hydrocarbons and chlorinated aromatic hydrocarbons.	200°F 93°C	-10°F -23°C
Nitrile: General purpose, oil-resistant. Shows good solvent, oil, water and hydraulic fluid resistance. Should not be used with highly polar solvents like acetone and MEK, ozone, chlorinated hydrocarbons and nitro hydrocarbons.	190°F 88°C	-10°F -23°C
Nylon: 6/6 High strength and toughness over a wide temperature range. Moderate to good resistance to fuels, oils and chemicals.	180°F 82°C	32°F 0°C
Polypropylene: A thermoplastic polymer. Moderate tensile and flex strength. Resists stong acids and alkali. Attacked by chlorine, fuming nitric acid and other strong oxidizing agents.	180°F 82°C	32°F 0°C
PVDF: (Polyvinylidene Fluoride) A durable fluoroplastic with excellent chemical resistance. Excellent for UV applications. High tensile strength and impact resistance.	250°F 121°C	0°F -18°C
Santoprene®: Injection molded thermoplastic elastomer with no fabric layer. Long mechanical flex life. Excellent abrasion resistance.	275°F 135°C	-40°F -40°C
UHMW PE: A thermoplastic that is highly resistant to a broad range of chemicals. Exhibits outstanding abrasion and impact resistance, along with environmental stress-cracking resistance.	180°F 82°C	-35°F -37°C
Urethane: Shows good resistance to abrasives. Has poor resistance to most solvents and oils.	150°F 66°C	32°F 0°C
Virgin PTFE: (PFA/TFE) Chemically inert, virtually impervious. Very few chemicals are known to chemically react with PTFE; molten alkali metals, turbulent liquid or gaseous fluorine and a few fluoro-chemicals such as chlorine trifluoride or oxygen difluoride which readily liberate free fluorine at elevated temperatures.	220°F 104°C	-35°F -37°C

Maximum and Minimum Temperatures are the limits for which these materials can be operated. Temperatures coupled with pressure affect the longevity of diaphragm pump components. Maximum life should not be expected at the extreme limits of the temperature ranges.

Metals:

Alloy C: Equal to ASTM494 CW-12M-1 specification for nickel and nickel alloy.

Stainless Steel: Equal to or exceeding ASTM specification A743 CF-8M for corrosion resistant iron chromium, iron chromium nickel and nickel based alloy castings for general applications. Commonly referred to as 316 Stainless Steel in the pump industry.

For specific applications, always consult the Chemical Resistance Chart.

Dimensional Drawings

S1F Non-Metallic Inline Ported Option- Polypropylene Wet End Models ONLY

Dimensions in inches (metric dimensions in brackets). Dimensional Tolerance .125" (3mm).

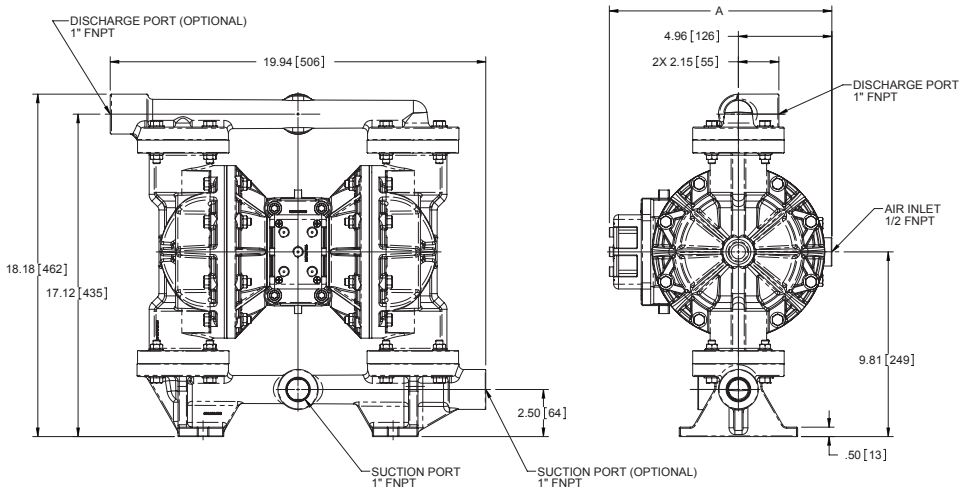

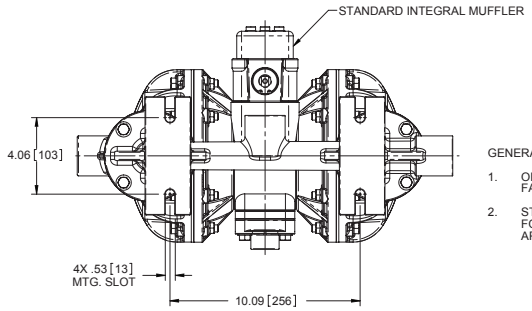

S1F NON-METALLIC
IN-LINE PORTED OPTION
DIMENSIONAL TOLERANCE = ±.125 [3mm]

	Standard Integral Muffler Option	Mesh & Sound Dampening Muffler Option
A	11.81 [300]	13.50 [343]

GENERAL NOTES

1. OPTIONAL SUCTION & DISCHARGE SIDE PORTS WILL BE PLUGGED AT FACTORY, NOT SHOWN
2. STANDARD INTEGRAL MUFFLER (SHOWN) COVERS 1" FNPT EXHAUST PORT FOR OPTIONAL MUFFLER STYLES OR PIPING EXHAUST AIR IN SUBMERGED APPLICATIONS

S1F Non-Metallic Center Ported Options

Dimensions in inches (metric dimensions in brackets). Dimensional Tolerance .125" (3mm).

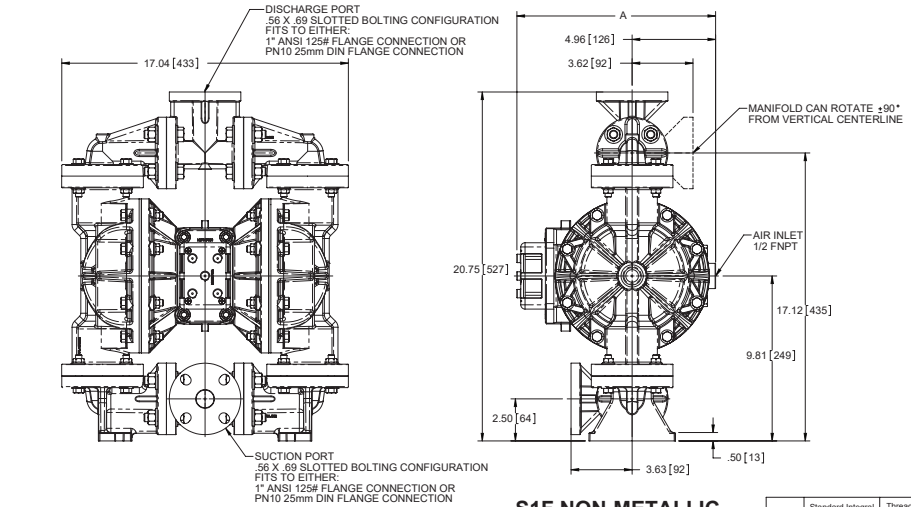

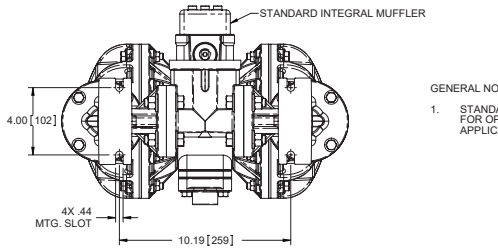

S1F NON-METALLIC
CENTER PORTED OPTION
DIMENSIONAL TOLERANCE = ±.125 [3mm]

	Standard Integral Muffler Option	Threaded Muffler (Conductive)
A	11.81 [300]	15.02 [382]

GENERAL NOTES

1. STANDARD INTEGRAL MUFFLER (SHOWN) COVERS 1" FNPT EXHAUST PORT FOR OPTIONAL MUFFLER STYLES OR PIPING EXHAUST AIR IN SUBMERGED APPLICATIONS

Dimensional Drawings

S1F Non-Metallic with Spill Containment

Dimensions in Inches. Dimensional tolerance: ±1/8"

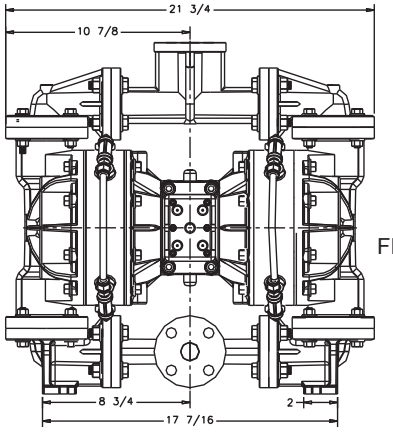

FRONT VIEW

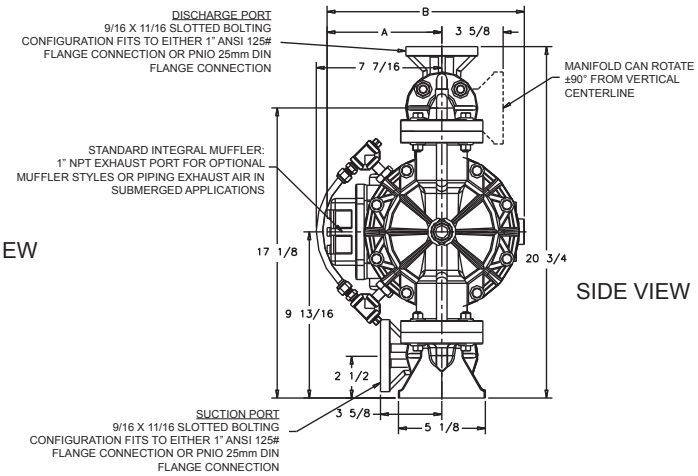

SIDE VIEW

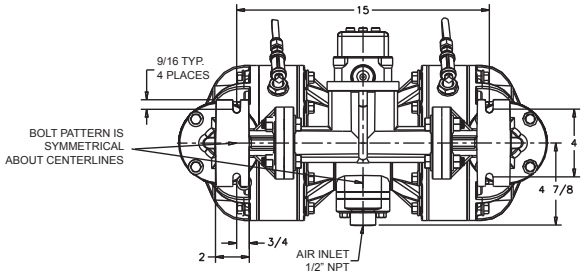

BOTTOM VIEW

DIMENSION	A	B
Standard Pump	6 7/8"	11 13/16"
Threaded Muffler (Conductive)	10 1/16"	15 1/32"

S1F Non-Metallic with Spill Containment (Metric)

Dimensions in Millimeters. Dimensional tolerance: ±3mm

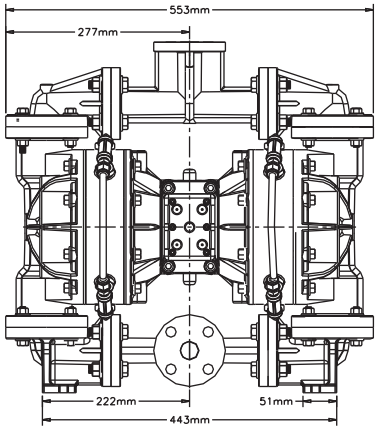

FRONT VIEW

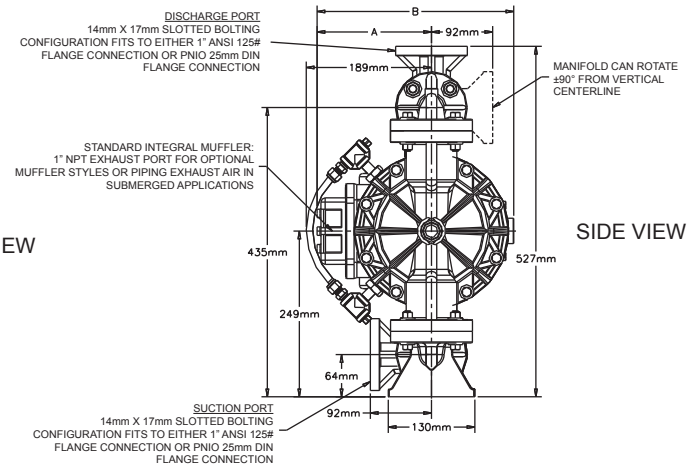

SIDE VIEW

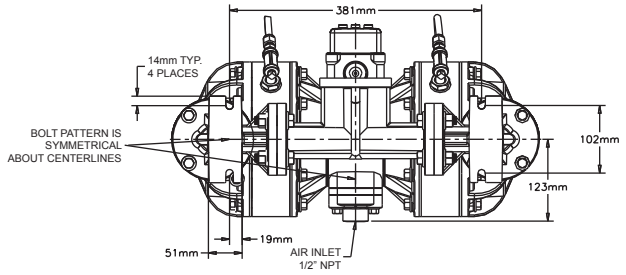

BOTTOM VIEW

DIMENSION	A	B
Standard Pump	174mm	300mm
Threaded Muffler (Conductive)	256mm	382mm

Principle of Pump Operation

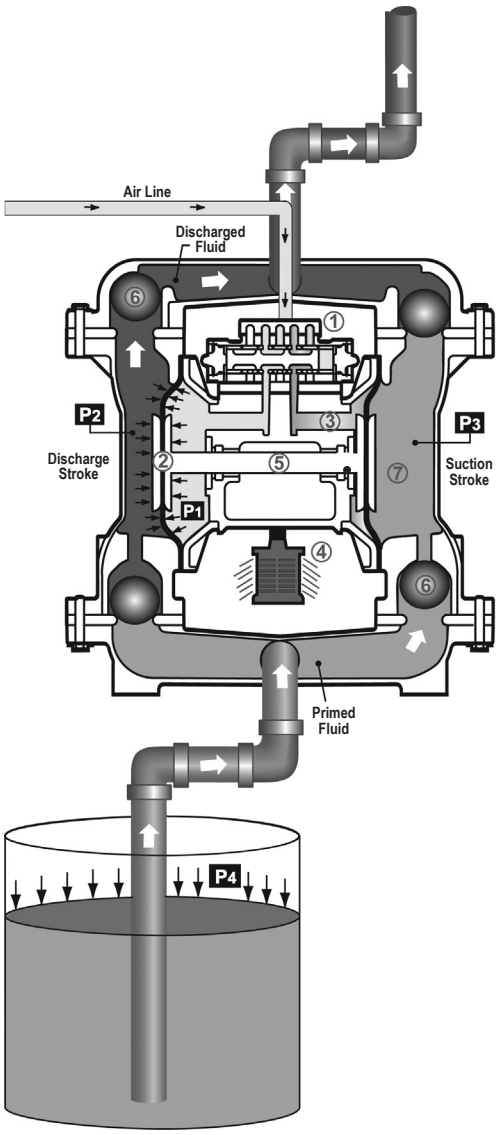

SUBMERGED ILLUSTRATION

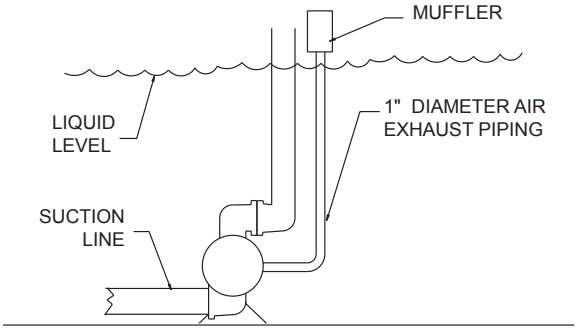

Pump can be submerged if the pump materials are compatible with the liquid being pumped. When the liquid level source is at a above the pump (flooded suction), pipe the exhaust above the liquid level to prevent siphoning spills

Principle of Pump Operation

Air Operated Double Diaphragm (AODD) pumps are powered with compressed air. A directional control valve (1) distributes compressed air to an air chamber while simultaneously exhausting the air from the opposite air chamber directed through the valve, and exhausted to atmosphere through muffler (4)

Compressed air exerts uniform pressure (P1) on the inner surface of diaphragm (2). When this pressure exceeds fluid pressure (P2), diaphragm (2) will translate to discharge the fluid. Diaphragms are connected via shaft (5) thus, as diaphragm (2) is in the discharge stroke the opposite diaphragm is the suction stroke. Liquid direction is controlled by check valves (6) and their relative orientation.

AODD pumps prime during the suction stroke. The suction stroke decreases chamber pressure (P3) by increasing chamber volume, resulting in a pressure differential. Consequently, atmospheric pressure (P4) pushes fluid through the suction piping and check valve into fluid chamber (7). The suction stroke also initiates the shifting of the pump.

As the suction diaphragm nears the end of it's stroke, the diaphragm's inner plate contacts an actuator pin which shifts the pilot signal control valve. Once actuated, the pilot valve sends a pressure signal to the opposite end of the main directional air valve, while simultaneously exhausting the other end. The main air valve redirects compressed air to the opposite air chamber and the cycle repeats.

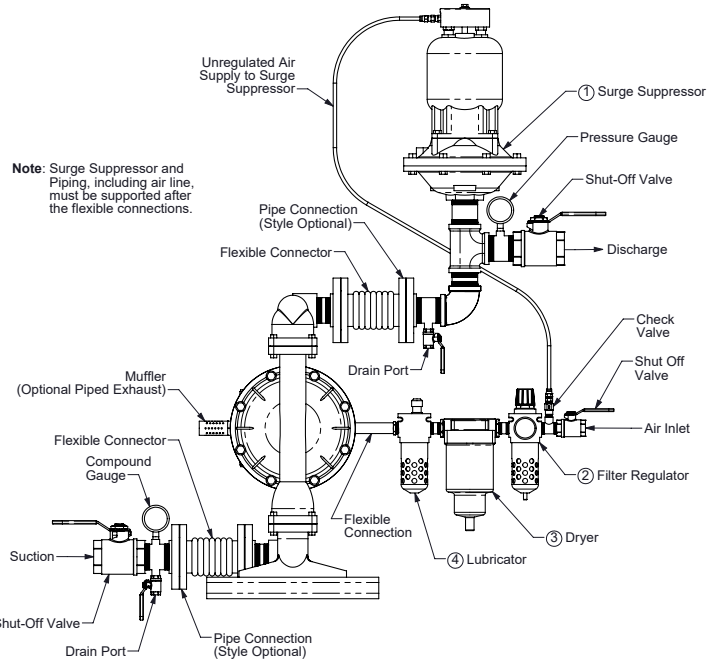

Installation: Locate the pump as close to the product being pumped as possible. Minimize suction line length and number of fittings. Do not reduce suction line diameter.

Air Supply: Connect air supply to pump air inlet to supply sufficient capacity and pressure to achieve desired performance. Use a pressure regulator to ensure air supply pressure does not exceed recommended limits.

Air Line Moisture: Water in the air supply may cause icing or freezing of exhaust air, causing erratic pump cycling. Use a point-of-use air dryer to reduce water in air.

Air Inlet & Priming: To start the pump, slightly open air shut-off valve. After pump primes, open air shut-off valve to achieve desired flow rate. If pump cycle rate increases but liquid flow rate does not, cavitation has occurred. Slightly close the air valve to obtain efficient air flow to fluid flow ratio.

Air Valve Lubrication: The air distribution system is designed to operate without lubrication

Recommended Installation Guide

Available Accessories:

1. Surge Suppressor
2. Filter/Regulator
3. Air Dryer
4. Lubricator

Note: Surge Suppressor and Piping, including air line, must be supported after the flexible connections.

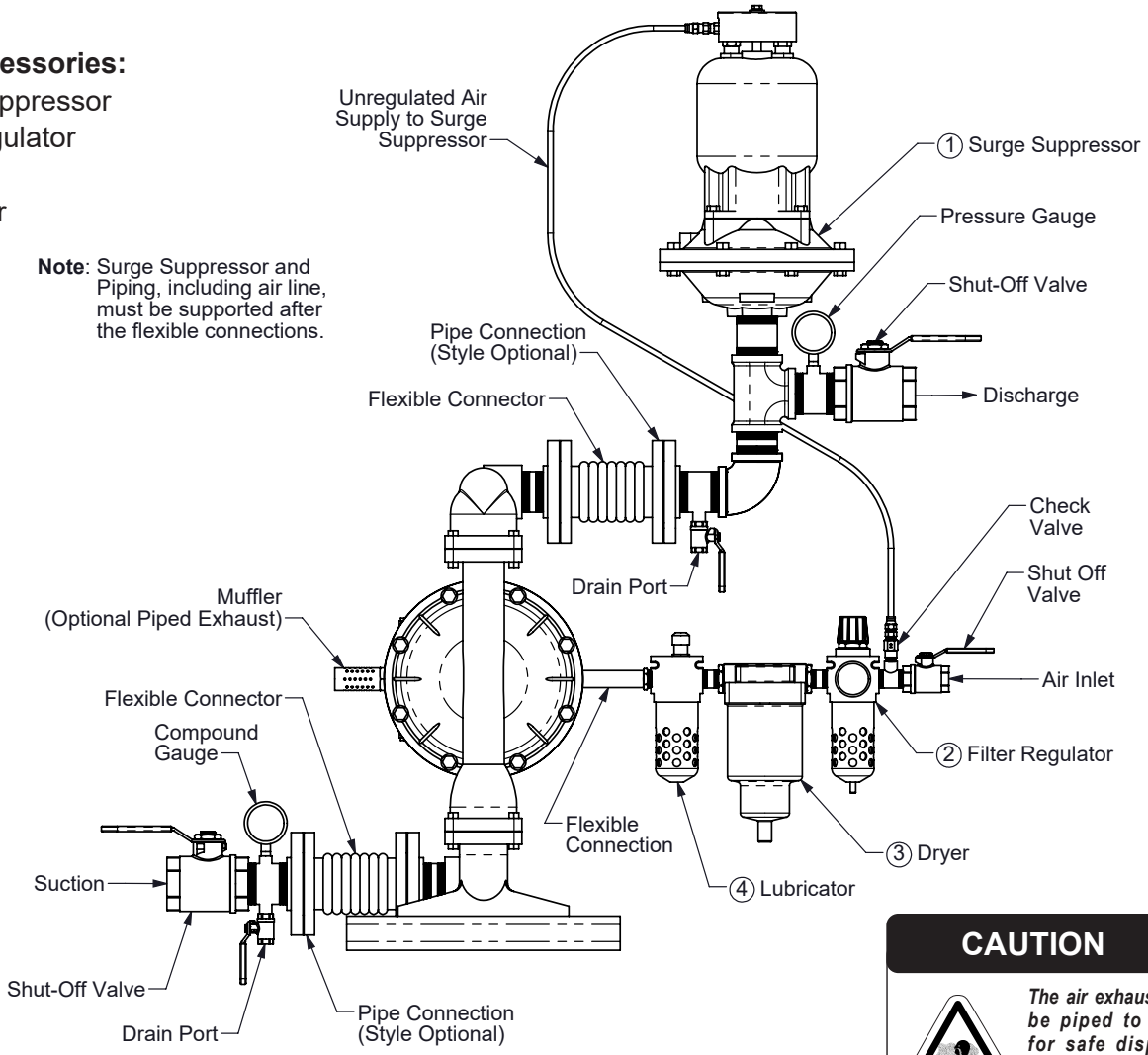

CAUTION

The air exhaust should be piped to an area for safe disposition of the product being pumped, in the event of a diaphragm failure.

Installation And Start-Up

Locate the pump as close to the product being pumped as possible. Keep the suction line length and number of fittings to a minimum. Do not reduce the suction line diameter.

Air Supply

Connect the pump air inlet to an air supply with sufficient capacity and pressure to achieve desired performance. A pressure regulating valve should be installed to insure air supply pressure does not exceed recommended limits.

Air Valve Lubrication

The air distribution system is designed to operate WITHOUT lubrication. This is the standard mode of operation. If lubrication is desired, install an air line lubricator set to deliver one drop of SAE 10 non-detergent oil for every 20 SCFM (9.4 liters/sec.) of air the pump consumes. Consult the Performance Curve to determine air consumption.

Air Line Moisture

Water in the compressed air supply may cause icing or freezing of the exhaust air, causing the pump to cycle erratically or stop operating. Water in the air supply can be reduced by using a point-of-use air dryer.

Air Inlet And Priming

To start the pump, slightly open the air shut-off valve. After the pump primes, the air valve can be opened to increase air flow as desired. If opening the valve increases cycling rate, but does not increase the rate of flow, cavitation has occurred. The valve should be closed slightly to obtain the most efficient air flow to pump flow ratio.

Troubleshooting Guide

Symptom:	Potential Cause(s):	Recommendation(s):
Pump Cycles Once	Deadhead (system pressure meets or exceeds air supply pressure).	Increase the inlet air pressure to the pump. Pump is designed for 1:1 pressure ratio at zero flow. (Does not apply to high pressure 2:1 units).
	Air valve or intermediate gaskets installed incorrectly.	Install gaskets with holes properly aligned.
	Bent or missing actuator plunger.	Remove pilot valve and inspect actuator plungers.
Pump Will Not Operate / Cycle	Pump is over lubricated.	Set lubricator on lowest possible setting or remove. Units are designed for lube free operation.
	Lack of air (line size, PSI, CFM).	Check the air line size and length, compressor capacity (HP vs. CFM required).
	Check air distribution system.	Disassemble and inspect main air distribution valve, pilot valve and pilot valve actuators.
	Discharge line is blocked or clogged manifolds.	Check for inadvertently closed discharge line valves. Clean discharge manifolds/piping.
	Deadhead (system pressure meets or exceeds air supply pressure).	Increase the inlet air pressure to the pump. Pump is designed for 1:1 pressure ratio at zero flow. (Does not apply to high pressure 2:1 units).
	Blocked air exhaust muffler.	Remove muffler screen, clean or de-ice, and re-install.
	Pumped fluid in air exhaust muffler.	Disassemble pump chambers. Inspect for diaphragm rupture or loose diaphragm plate assembly.
	Pump chamber is blocked.	Disassemble and inspect wetted chambers. Remove or flush any obstructions.
Pump Cycles and Will Not Prime or No Flow	Cavitation on suction side.	Check suction condition (move pump closer to product).
	Check valve obstructed. Valve ball(s) not seating properly or sticking.	Disassemble the wet end of the pump and manually dislodge obstruction in the check valve pocket. Clean out around valve ball cage and valve seat area. Replace valve ball or valve seat if damaged. Use heavier valve ball material.
	Valve ball(s) missing (pushed into chamber or manifold).	Worn valve ball or valve seat. Worn fingers in valve ball cage (replace part). Check Chemical Resistance Guide for compatibility.
	Valve ball(s) / seat(s) damaged or attacked by product.	Check Chemical Resistance Guide for compatibility.
	Check valve and/or seat is worn or needs adjusting.	Inspect check valves and seats for wear and proper setting. Replace if necessary.
	Suction line is blocked.	Remove or flush obstruction. Check and clear all suction screens or strainers.
	Excessive suction lift.	For lifts exceeding 20' of liquid, filling the chambers with liquid will prime the pump in most cases.
	Suction side air leakage or air in product.	Visually inspect all suction-side gaskets and pipe connections.
	Pumped fluid in air exhaust muffler.	Disassemble pump chambers. Inspect for diaphragm rupture or loose diaphragm plate assembly.
Pump Cycles Running Sluggish / Stalling, Flow Unsatisfactory	Over lubrication.	Set lubricator on lowest possible setting or remove. Units are designed for lube free operation.
	Icing.	Remove muffler screen, de-ice, and re-install. Install a point of use air drier.
	Clogged manifolds.	Clean manifolds to allow proper air flow.
	Deadhead (system pressure meets or exceeds air supply pressure).	Increase the inlet air pressure to the pump. Pump is designed for 1:1 pressure ratio at zero flow. (Does not apply to high pressure 2:1 units).
	Cavitation on suction side.	Check suction (move pump closer to product).
	Lack of air (line size, PSI, CFM).	Check the air line size, length, compressor capacity.
	Excessive suction lift.	For lifts exceeding 20' of liquid, filling the chambers with liquid will prime the pump in most cases.
	Air supply pressure or volume exceeds system hd.	Decrease inlet air (press. and vol.) to the pump. Pump is cavitating the fluid by fast cycling.
	Undersized suction line.	Meet or exceed pump connections.
	Restrictive or undersized air line.	Install a larger air line and connection.
	Suction side air leakage or air in product.	Visually inspect all suction-side gaskets and pipe connections.
	Suction line is blocked.	Remove or flush obstruction. Check and clear all suction screens or strainers.
	Pumped fluid in air exhaust muffler.	Disassemble pump chambers. Inspect for diaphragm rupture or loose diaphragm plate assembly.
	Check valve obstructed.	Disassemble the wet end of the pump and manually dislodge obstruction in the check valve pocket.
	Check valve and/or seat is worn or needs adjusting.	Inspect check valves and seats for wear and proper setting. Replace if necessary.
	Entrained air or vapor lock in chamber(s).	Purge chambers through tapped chamber vent plugs. Purging the chambers of air can be dangerous.
Product Leaking Through Exhaust	Diaphragm failure, or diaphragm plates loose.	Replace diaphragms, check for damage and ensure diaphragm plates are tight.
	Diaphragm stretched around center hole or bolt holes.	Check for excessive inlet pressure or air pressure. Consult Chemical Resistance Chart for compatibility with products, cleaners, temperature limitations and lubrication.
Premature Diaphragm Failure	Cavitation.	Enlarge pipe diameter on suction side of pump.
	Excessive flooded suction pressure.	Move pump closer to product. Raise pump/place pump on top of tank to reduce inlet pressure. Install Back pressure device (Tech bulletin 41r). Add accumulation tank or pulsation dampener.
	Misapplication (chemical/physical incompatibility).	Consult Chemical Resistance Chart for compatibility with products, cleaners, temperature limitations and lubrication.
	Incorrect diaphragm plates or plates on backwards, installed incorrectly or worn.	Check Operating Manual to check for correct part and installation. Ensure outer plates have not been worn to a sharp edge.
Unbalanced Cycling	Excessive suction lift.	For lifts exceeding 20' of liquid, filling the chambers with liquid will prime the pump in most cases.
	Undersized suction line.	Meet or exceed pump connections.
	Pumped fluid in air exhaust muffler.	Disassemble pump chambers. Inspect for diaphragm rupture or loose diaphragm plate assembly.
	Suction side air leakage or air in product.	Visually inspect all suction-side gaskets and pipe connections.
	Check valve obstructed.	Disassemble the wet end of the pump and manually dislodge obstruction in the check valve pocket.
	Check valve and/or seat is worn or needs adjusting.	Inspect check valves and seats for wear and proper setting. Replace if necessary.
	Entrained air or vapor lock in chamber(s).	Purge chambers through tapped chamber vent plugs.

For additional troubleshooting tips contact After Sales Support at service.warrenrupp@idexcorp.com or 419-524-8388

Composite Repair Parts Drawing

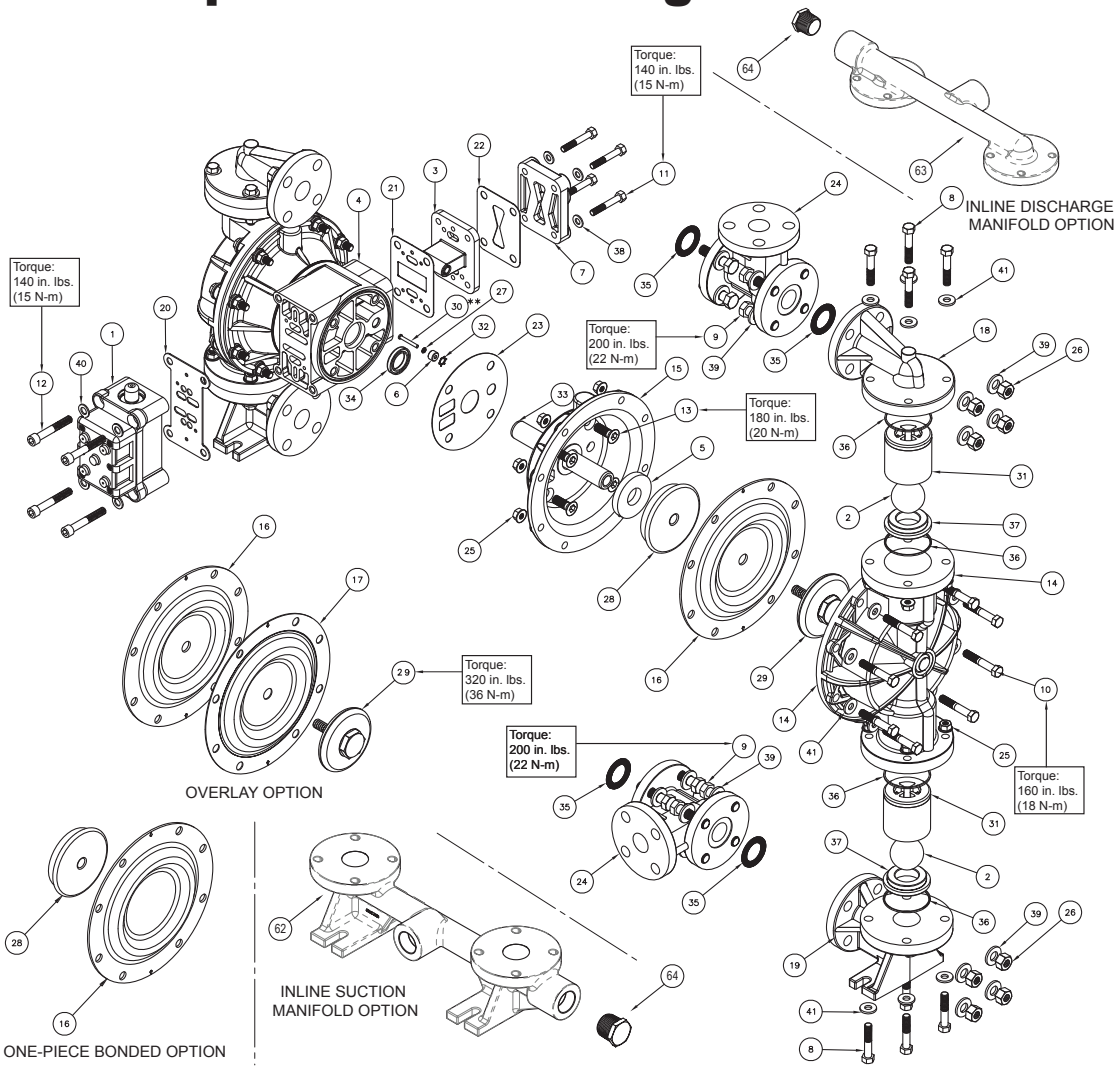

Service & Repair Kits

476.217.000 **Air End Kit** (For Polypropylene Center Section)
Seals, O-Rings, Gaskets, Retaining Rings, Air Valve Sleeve & Spool Set and Pilot Valve Assembly

476.218.000 **Air End Kit** (S-troke Indicator Option, For Polypropylene Center Section)
Seals, O-Rings, Gaskets, Retaining Rings, Air Valve, Sleeve & Spool Set and Pilot Valve Assembly

476.197.354 **Wetted End Kit**
Santoprene Diaphragms, Santoprene Balls and PTFE Seals

476.197.360 **Wetted End Kit**
Nitrile Diaphragms, Nitrile Balls and PTFE Seals

476.197.363 **Wetted End Kit**
FKM Diaphragms, FKM Balls and PTFE Seals

476.197.365 **Wetted End Kit**
Neoprene Diaphragms, Neoprene Balls and PTFE Seals

476.197.635 **Wetted End Kit**
Neoprene Diaphragms, PTFE Overlay Diaphragms, PTFE Balls and PTFE Seals

476.197.654 **Wetted End Kit**
Santoprene Diaphragms, PTFE Overlay Diaphragms, TFE Balls and TFE Seals

476.197.659 **Wetted End Kit**
One-Piece Bonded Diaphragms, PTFE Balls, PTFE Seals

476.198.655 **Wetted End Kit**
Santoprene Diaphragms, PTFE Overlay Diaphragms, PTFE Pumping Diaphragms, PTFE Balls and PTFE Seals

476.198.354 **Wetted End Kit**
Santoprene Diaphragms, Santoprene Pumping Diaphragms, Santoprene Check Balls and PTFE Seals

476.198.659 **Wetted End Kit**
One-Piece Bonded Diaphragms, PTFE Pumping Diaphragms, PTFE Balls, PTFE Seals

Electronic Leak Detector Kits

032.037.000 110 VAC / 220 VAC

032.045.000 12 - 32 VDC

Note: Polypropylene pumps are shipped with the 1" NPT Pipe Plug (Item 64) installed in the end ports of both suction and discharge one-piece manifolds. To convert to the Inline porting positions for pump installation and operation, first remove the pipe plugs and re-install in the center ports. Apply PTFE tape or pipe sealant to threads of the plug before installation.

Composite Repair Parts List

Item	Part Number	Description	Qty
◯1	031.140.000	Air Valve Assembly	1
⚠	031.140.001	Air Valve Assembly	1
	031.140.002	Air Valve Assembly w/PTFE Coated Hardware	1
	031.140.162	Air Valve Assembly (Brass Spool - Stainless Sleeve)	1
	031.141.000	Air Valve Assembly (No Muffler)	1
⚠	031.141.001	Air Valve Assembly (No Muffler)	1
	031.141.162	Air Valve Assembly (No Muffler Brass Spool - Stainless Sleeve)	
⚠	031.146.000	Air Valve Assembly (With Stroke Indicator Option)	1
⚠	031.147.000	Air Valve Assembly (With Stroke Indicator Option) (No Muffler)	1
□2	050.042.354	Ball, Check	4
	050.042.360	Ball, Check	4
	050.042.363	Ball, Check	4
	050.042.365	Ball, Check	4
	050.042.600	Ball, Check	4
◯3	095.110.558	Pilot Valve Assembly	1
4	114.024.551	Intermediate Assembly	1
⚠	114.024.559	Intermediate Assembly	1
◯5	132.035.360	Bumper, Diaphragm	2
◯6	135.034.506	Bushing, Plunger	2
7	165.125.551	Cap, Air Inlet	1
⚠	165.125.559	Cap, Air Inlet	1
8	170.020.115	Capscrew, Hex HD 3/8 - 16 x 2.00	16
	170.020.308	Capscrew, Hex HD 3/8 - 16 x 2.00	16
9	170.030.115	Capscrew, Hex HD 1/2 - 13 x 2.00 (not used with inline option)	16
	170.030.308	Capscrew, Hex HD 1/2 - 13 x 2.00 (not used with inline option)	16
10	170.052.115	Capscrew, Hex HD 3/8 - 16 x 2.25	16
	170.052.308	Capscrew, Hex HD 3/8 - 16 x 2.25	16
11	170.069.115	Capscrew, Hex HD 5/16 - 18 x 1.75	4
	170.069.308	Capscrew, Hex HD 5/16 - 18 x 1.75	4
12	171.053.115	Capscrew, Soc HD 3/8 - 16 x 2.50	4
13	171.015.115	Capscrew, Soc HD 3/8 - 16 x .88	8
	171.015.308	Capscrew, Soc HD 3/8 - 16 x .88	8
14	196-157.520	Chamber, Outer	2
⚠	196.157.521	Chamber, Outer	2
	196.157.552	Chamber, Outer	2
⚠	196.157.557	Chamber, Outer	2
15	196.177.551	Chamber, Inner	2
⚠	196.177.559	Chamber, Inner	2
□16	286.107.354	Diaphragm	2
	286.107.360	Diaphragm	2
	286.115.000	Diaphragm, One.Piece Bonded	2
	286.107.363	Diaphragm	2
	286.107.365	Diaphragm	2
□17	286.108.600	Diaphragm, Overlay	2
18	312.104.520	Elbow	2
	312.104.521	Elbow	2
⚠	312.104.557	Elbow	2
⚠	312.104.552	Elbow (not used with inline option)	2
19	312.113.520	Elbow, Suction	2
⚠	312.113.521	Elbow, Suction	2
	312.113.552	Elbow, Suction (not used with inline option)	2
⚠	312.113.557	Elbow, Suction	1
◯20	360.093.360	Gasket, Air Valve	1
◯21	360.103.360	Gasket, Pilot Valve	1
◯22	360.104.360	Gasket, Air Inlet	1
⚠	360.104.379	Gasket, Air Inlet	1
□23	360.107.360	Gasket, Inner Chamber	2
24	518.179.520	Manifold	2
⚠	518.179.521	Manifold	2
	518.179.552	Manifold	2
⚠	518.179.557	Manifold	2
25	544.002.115	Nut, Hex 3/8 - 16	32
	544.002.308	Nut, Hex 3/8 - 16	32
26	545.008.110	Nut, Hex 1/2 - 13 (not used with inline option)	16
	545.008.308	Nut, Hex 1/2 - 13 (not used with inline option)	16
◯27	560.001.360	O-Ring	2
28	612.200.157	Inner Diaphragm Plate	2
	612.200.082	Inner Diaphragm Plate	2
	612.220.150	Inner Diaphragm Plate (One-Piece Bonded Option)	2
29	612.204.520	Outer Diaphragm Plate	2
	612.204.552	Outer Diaphragm Plate	2
◯30	620.020.115	Plunger, Actuator	2
31	670.048.520	Retainer, Ball	4
	670.048.552	Retainer, Ball	4
◯32	675.042.115	Ring, Retainer	2
33	685.058.120	Rod, Diaphragm	1
◯34	720.004.360	Seal, Diaphragm Rod	2
□35	720.044.600	Seal, Manifold Spacer (not used with inline option)	4
□36	720.047.600	Seal, Check Valve	8
37	722.079.520	Seat, Check Valve	4
	722.079.552	Seat, Check Valve	4
38	901.038.115	Washer, Flat 5/16"	4
	901.038.308	Washer, Flat 5/16"	4
39	901.046.115	Washer, Flat 1/2" (not used with inline option)	32
	901.046.308	Washer, Flat 1/2" (not used with inline option)	32
40	901.048.115	Washer, Flat 3/8"	4
	901.048.308	Washer, Flat 3/8"	4
41	901.049.115	Washer, Flat 3/8"	32
	901.049.308	Washer, Flat 3/8"	32
62	518.203.552	Manifold, Suction (Inline Porting Option ONLY)	1
63	518.204.552	Manifold, Discharge (Inline Porting Option ONLY)	1
64	618.057.552	Plug, 1" NPT Pipe (Inline Porting Option ONLY)	2
Not Shown			
	530.058.000	Threaded Muffler (Conductive)	1

LEGEND:

◯ = Items contained within Air End Kits

□ = Items contianed within Wet End Kits

*Air End Kit does not include the complete air valve assembly

Note: *Kits contain components specific to the material codes.*

ATEX Compliant

Material Codes - The Last 3 Digits of Part Number

000.....Assembly, sub-assembly; and some purchased items
010.....Cast Iron
015.....Ductile Iron
020.....Ferritic Malleable Iron
080.....Carbon Steel, AISI B-1112
110.....Alloy Type 316 Stainless Steel
111.....Alloy Type 316 Stainless Steel (Electro Polished)
112.....Alloy C
113.....Alloy Type 316 Stainless Steel (Hand Polished)
114.....303 Stainless Steel
115.....302/304 Stainless Steel
117.....440-C Stainless Steel (Martensitic)
120.....416 Stainless Steel (Wrought Martensitic)
148.....Hardcoat Anodized Aluminum
150.....6061-T6 Aluminum
152.....2024-T4 Aluminum (2023-T351)
155.....356-T6 Aluminum
156.....356-T6 Aluminum
157.....Die Cast Aluminum Alloy #380
158.....Aluminum Alloy SR-319
162.....Brass, Yellow, Screw Machine Stock
165.....Cast Bronze, 85-5-5-5
166.....Bronze, SAE 660
170.....Bronze, Bearing Type, Oil Impregnated
180.....Copper Alloy
305.....Carbon Steel, Black Epoxy Coated
306.....Carbon Steel, Black PTFE Coated
307.....Aluminum, Black Epoxy Coated
308.....Stainless Steel, Black PTFE Coated
309.....Aluminum, Black PTFE Coated
313.....Aluminum, White Epoxy Coated
330.....Zinc Plated Steel
332.....Aluminum, Electroless Nickel Plated
333.....Carbon Steel, Electroless Nickel Plated
335.....Galvanized Steel
337.....Silver Plated Steel
351.....Food Grade Santoprene®
353.....Geolast; Color: Black
354.....Injection Molded #203-40 Santoprene® Duro 40D +/-5; Color: RED
356.....Hytrel®
357.....Injection Molded Polyurethane
358.....Urethane Rubber (Some Applications) (Compression Mold)
359.....Urethane Rubber
360.....Nitrile Rubber Color coded: RED
363.....FKM (Fluorocarbon) Color coded: YELLOW
364.....EPDM Rubber Color coded: BLUE
365.....Neoprene Rubber Color coded: GREEN
366.....Food Grade Nitrile
368.....Food Grade EPDM
371.....Philthane (Tuftane)
374.....Carboxylated Nitrile
375.....Fluorinated Nitrile
378.....High Density Polypropylene
379.....Conductive Nitrile
408.....Cork and Neoprene
425.....Compressed Fibre
426.....Blue Gard
440.....Vegetable Fibre
500.....Delrin® 500
502.....Conductive Acetal, ESD-800
503.....Conductive Acetal, Glass-Filled
506.....Delrin® 150
520.....Injection Molded PVDF Natural color
540.....Nylon
542.....Nylon
544.....Nylon Injection Molded
550.....Polyethylene
551.....Glass Filled Polypropylene
552.....Unfilled Polypropylene
555.....Polyvinyl Chloride
556.....Black Vinyl
557.....Unfilled Conductive Polypropylene
558.....Conductive HDPE
559.....Glass-Filled Conductive Polypropylene
570.....Rulon II®
580.....Ryton®
600.....PTFE (virgin material) Tetrafluorocarbon (TFE)
603.....Blue Gylon®
604.....PTFE
606.....PTFE
607.....Envelon
608.....Conductive PTFE
610.....PTFE Encapsulated Silicon
611.....PTFE Encapsulated FKM
632.....Neoprene/Hytrel®
633.....FKM/PTFE
634.....EPDM/PTFE
635.....Neoprene/PTFE
637.....PTFE, FKM/PTFE
638.....PTFE, Hytrel®/PTFE
639.....Nitrile/TFE
643.....Santoprene®/EPDM
644.....Santoprene®/PTFE
656.....Santoprene® Diaphragm and Check Balls/EPDM Seats
661.....EPDM/Santoprene®
666.....FDA Nitrile Diaphragm, PTFE Overlay, Balls, and Seals
668.....PTFE, FDA Santoprene®/PTFE

- Delrin and Hytrel are registered tradenames of E.I. DuPont.
- Nylatron is a registered tradename of Polymer Corp.
- Gylon is a registered tradename of Garlock, Inc.
- Santoprene is a registered tradename of Exxon Mobil Corp.
- Rulon II is a registered tradename of Dixion Industries Corp.
- Ryton is a registered tradename of Phillips Chemical Co.
- Valox is a registered tradename of General Electric Co.

RECYCLING

Warren Rupp is an ISO14001 registered company and is committed to minimizing the impact our products have on the environment. Many components of SANDPIPER® AODD pumps are made of recyclable materials. We encourage pump users to recycle worn out parts and pumps whenever possible, after any hazardous pumped fluids are thoroughly flushed. Pump users that recycle will gain the satisfaction to know that their discarded part(s) or pump will not end up in a landfill. The recyclability of SANDPIPER products is a vital part of Warren Rupp's commitment to environmental stewardship.

Spill Containment Options

IMPORTANT



Read these instructions completely, before installation and start-up. It is the responsibility of the purchaser to retain this manual for reference. Failure to comply with the recommendations stated in this manual will damage the pump, and void factory warranty.

Virgin PTFE Equipped Pumps

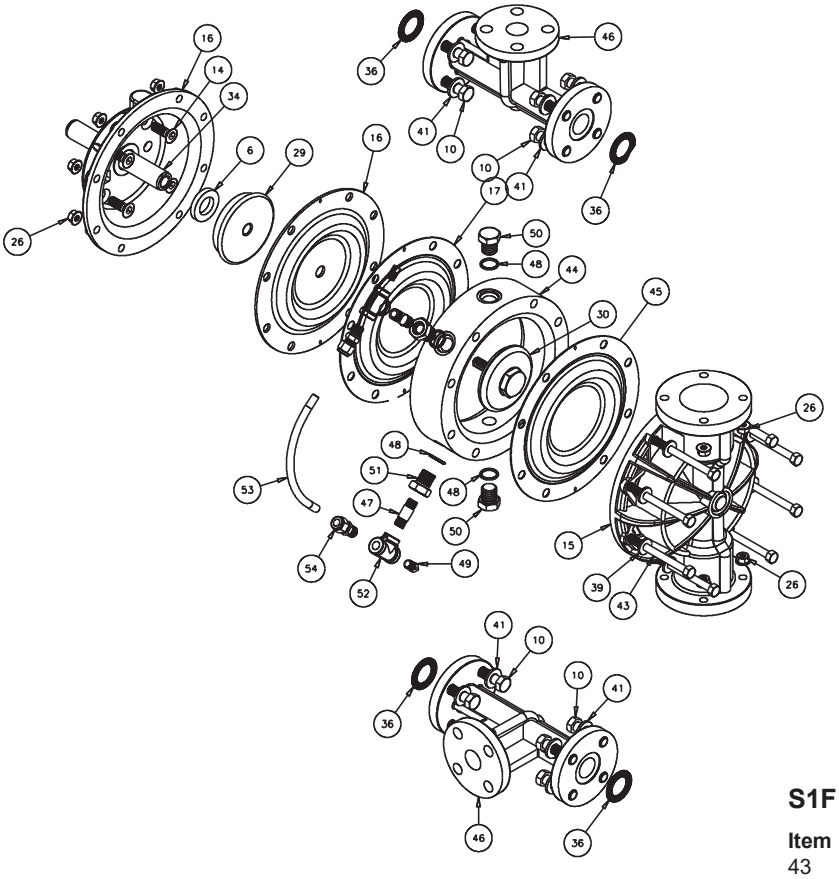

Note:
Item 45
The diaphragm is to be installed with the convex side facing toward the outer chambers.

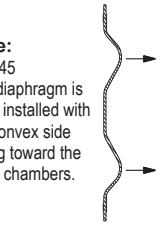

Santoprene Equipped Pumps

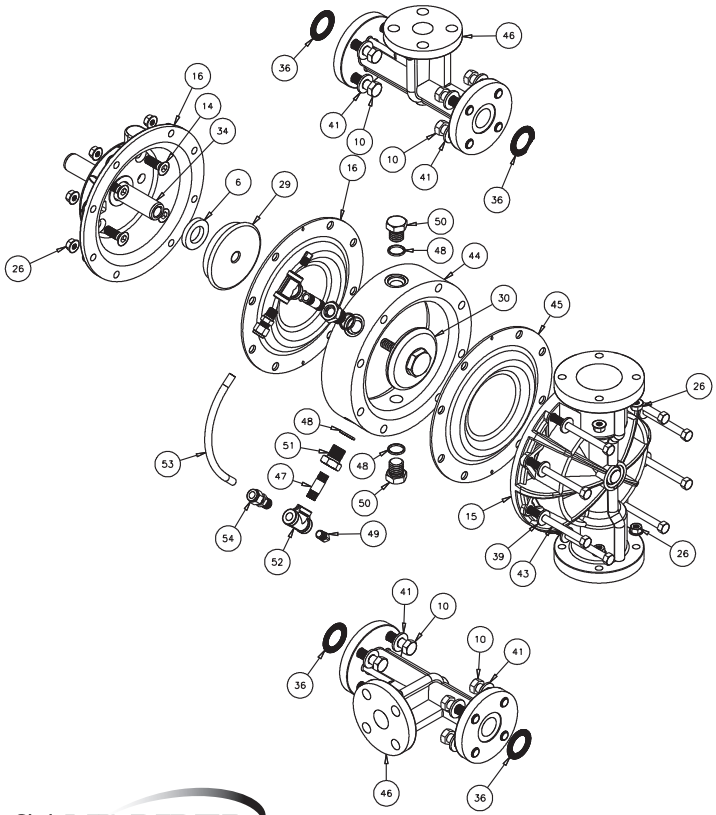

S1F Spill Containment Repair Parts List

Item	Part Number	Description	Qty
43	170.114.115	Capscrew, Hex HD 3/8 - 16 x 4.75 (Replace 170-052-115)	16
	170.114.308	Capscrew, Hex HD 3/8 - 16 x 4.75 (Replace 170.052.115)	16
44	196.159.552	Chamber, Spill Containment	2
	196.159.520	Chamber, Spill Containment	2
45	286.094.600	Diaphragm, Pumping (PTFE Only)	2
	286.092.354	Diaphragm, Pumping (Santoprene Only)	2
46	518.180.520	Manifold, Spill Containment (Replace 518.179.520)	2
	518.180.552	Manifold, Spill Containment (Replace 518.179.520)	2
47	538.022.110	Nipple, Pipe	4
	538.022.308	Nipple, Pipe	4
48	560.078.611	O-Ring	8
49	618.003.110	Plug, Pipe	4
	618.003.308	Plug, Pipe	4
50	618.025.110	Plug, Boss	4
	618.025.308	Plug, Boss	4
51	618.031.110	Threaded Bushing	4
	618.031.308	Threaded Bushing	4
52	835.005.110	Tee, Pipe	4
	835.005.308	Tee, Pipe	4
53	860.056.606	Tube, Sight	2
54	866.060.110	Connector, Tube	4

***Note:** The Diaphragm is to be installed with the convex side facing toward the outer chamber. See drawing.

Note: Pump units with One-Piece Bonded Diaphragm option will not include Overlay Diaphragms (Items 17) and Outer Diaphragm Plate (Item 29).

Spill Containment Servicing

Read these instructions completely, before installation and start-up. It is the responsibility of the purchaser to retain this manual for reference. Failure to comply with the recommendations stated in this manual will damage the pump, and void factory warranty.

Step 1: With the unit removed from service. Remove each bottom boss plug (item 51). Drain the fluid from spill containment chambers. With manifolds and outer chambers removed, remove diaphragm assemblies from diaphragm rod.
DO NOT use a pipe wrench or similar tool to remove assembly from rod. Flaws in the rod surface may damage bearings and seal. Soft jaws in a vise are recommended to prevent diaphragm rod damage.

Step 1.A: NOTE: Not all inner diaphragm plates are threaded. Some models utilize a through hole in the inner diaphragm plate. If required to separate diaphragm assembly, place assembly in a vise, gripping on the exterior cast diameter of the inner plate. Turn the outer plate clockwise to separate the assembly.
Always inspect diaphragms for wear cracks or chemical attack. Inspect inner and outer plates for deformities, rust scale and wear. Inspect intermediate bearings for elongation and wear. Inspect diaphragm rod for wear or marks. Clean or repair if appropriate. Replace as required.

Step 2: Reassembly: There are two different types of diaphragm plate assemblies utilized throughout the Sandpiper product line: Outer plate with a threaded stud, diaphragm, and a threaded inner plate. Outer plate with a threaded stud, diaphragm, and an inner plate with through hole. Secure threaded inner plate in a vise. Ensure that the plates are being installed with the outer radius against the diaphragm.

Step 3: Lightly lubricate, with a compatible material, the inner faces of both outer and inner diaphragm plates when using on non-Overlay diaphragms (For EPDM water is recommended). No lubrication is required.

Step 4: Push the threaded outer diaphragm plate through the center hole of the diaphragm.
Note: Most diaphragms are installed with the natural bulge out towards the fluid side.

Step 5: Thread or place, outer plate stud into the inner plate. For threaded inner plates, use a torque wrench to tighten the assembly together. Torque values are called out on the exploded view. Repeat procedure for second side assembly. Allow a minimum of 15 minutes to elapse after torqueing, and then re-torque the assembly to compensate for stress relaxation in the clamped assembly.

Step 6: Thread one assembly onto the diaphragm rod with sealing washer (when used) and bumper.

Step 7: Install diaphragm rod assembly into pump and reassemble containment chamber then the pumping diaphragms (item 45) secure by installing the outer chamber in place and tightening the capscrews. Replace bottom boss plug (item 51) and O-Ring (item 48) **NOTE:** The spill containment option has two additional pumping diaphragms (item 45). These diaphragms are installed with the natural concave curve toward the outer chamber.

Step 8: On opposite side of pump, thread the remaining assembly onto the diaphragm rod. Using a torque wrench, tighten the assembly to the diaphragm rod. Align diaphragm through bolt holes, always going forward past the recommended torque. Torque values are called out on the exploded view. **NEVER** reverse to align holes, if alignment cannot be achieved without damage to diaphragm, loosen complete assemblies, rotate diaphragm and reassemble as described above.

Step 9: Reassemble containment chamber then the pumping diaphragms (item 45) secure by installing the outer chamber in place and tightening the capscrews. Replace bottom boss plug (item 51) and new O-Ring (item 48).

NOTE: The spill containment option has two additional virgin pumping diaphragms (item 45). PTFE diaphragms are installed with the natural concave curve toward the outer chamber.

NOTE: One Piece Diaphragm Servicing (Bonded PTFE with integral plate) The One Piece diaphragm has a threaded stud installed in the integral plate at the factory. The inner diaphragm plate has a through hole instead of a threaded hole. Place the inner plate over the diaphragm stud and thread the first diaphragm / inner plate onto the diaphragm rod only until the inner plate contacts the rod. Do not tighten. A small amount of grease may be applied between the inner plate and the diaphragm to facilitate assembly. Insert the diaphragm / rod assembly into the pump and install the outer chamber. Turn the pump over and thread the second diaphragm / inner plate onto the diaphragm rod. Turn the diaphragm until the inner plate contacts the rod and hand tighten the assembly. Continue tightening until the bolt holes align with the inner chamber holes. **DO NOT LEAVE THE ASSEMBLY LOOSE.**

FILLING CHAMBERS WITH LIQUID
THE CHAMBERS ARE FILLED WITH WATER AT THE FACTORY.
If you prefer to substitute another liquid, to prevent system contamination consult the factory first to determine compatibility of the substitute with pump construction.

Follow the steps listed here to replace the liquid in the pump after disassembly or liquid loss:

10. With the top two boss plugs (items 50) removed. The spill containment chambers are filled through the exposed ports.

11. Install safety clip (item 1-K) into the smaller unthreaded hole in one end cap (item 1-E). This locks the valve spool to one side, keeping the pump from shifting. Apply air pressure to the air distribution valve.

12 Face the side of the pump with the installed safety clip. If the safety clip is installed in the top end cap, fill the left spill containment chamber. If the safety clip is installed on the bottom end cap, fill the right spill containment chamber. The volume of fluid is 1198 ml (40.49 fl. oz.). It is important that the exact amount of fluid is used. Too little or too much fluid causes premature diaphragm failure and erratic pumping.

13. Loosely reinstall one boss plug (item 50) to the filled spill containment chamber.

14. Shut off air supply. Remove safety clip. Manually shift air valve by pushing stroke indicator pin in the opposite direction of current position. Install safety clip (item 1-K) into the smaller unthreaded hole in the opposite end cap (item 1-E). This locks the valve spool to one side, keeping the pump from shifting. Adjust the airline regulator so that air pressure slowly fills the pump. The diaphragm expands, forcing the fluid in the chamber to be slowly displaced.

15. Loosen the top boss plug on the filled chambers. This allows fluid in the chamber to purge trapped air from the chamber. This can be seen by watching the column of fluid in the sight tube. When fluid appears at the top of the port, quickly tighten the boss plug. Fluid loss of 1 to 2ml is acceptable.

16. Tilt the pump so the uppermost pipe tee (item 52) is in the vertical position. Loosen the pipe plug (item 49). This will allow trapped air to purge through the pipe tee. When fluid appears at the tee opening, reinstall the pipe plug. NOTE: If all air is not purged using this procedure, remove the check valve components from the top port of the outer chamber (item 44). Apply manual pressure to the pumping diaphragm by inserting a blunt instrument into the top port of the outer chamber and applying pressure to the diaphragm. Loosen the pipe plug (item 49) allowing the fluid to purge any remaining trapped air. Reinstall the plug.

17. Repeat steps 12 through 16 to fill opposite spill containment chamber.

18. Reinstall the check valve components, discharge manifold and elbows to the pump. The pump is now ready for operation.

Air Distribution Valve Assembly

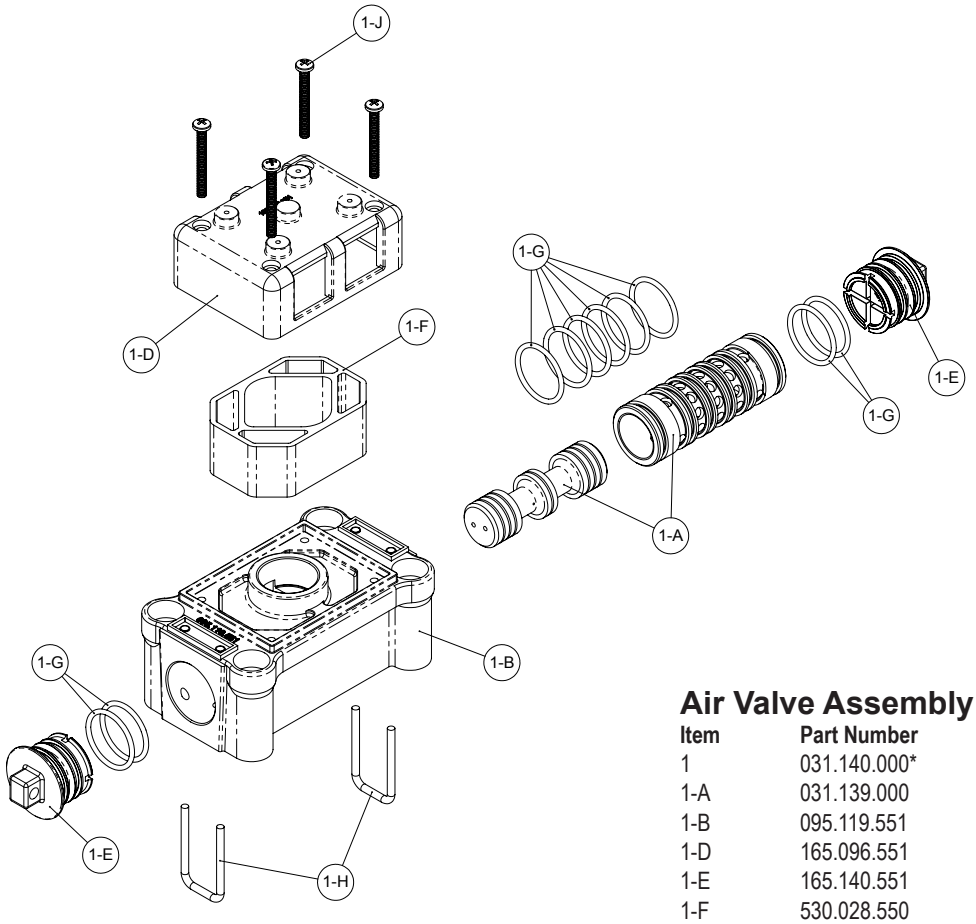

Air Distribution Valve Servicing

See repair parts drawing, remove screws.

Step 1: Remove staple retainer (1-H).

Step 2: Remove end cap (1-E).

Step 3: Remove spool part of (1-A) (caution: do not scratch).

Step 4: Press sleeve (1-A) from body (1-B).

Step 5: Inspect O-Ring (1-H) and replace if necessary.

Step 6: Lightly lubricate O-Rings (1-H) on sleeve (1-A).

Step 7: Press sleeve (1-A) into body (1-B).

Step 8: Reassemble in reverse order, starting with step 3.

Note: Sleeve and spool (1-A) set is match ground to a specified clearance sleeve and spools (1-A) cannot be interchanged.

⚠ IMPORTANT

Read these instructions completely, before installation and start-up. It is the responsibility of the purchaser to retain this manual for reference. Failure to comply with the recommendations stated in this manual will damage the pump, and void factory warranty.

Air Valve Assembly Parts List

Item	Part Number	Description	Qty
1	031.140.000*	Air Valve Assembly	1
1-A	031.139.000	Sleeve and Spool Set	1
1-B	095.119.551	Body, Air Valve	1
1-D	165.096.551	Cap, Muffler	1
1-E	165.140.551	Cap, End	2
1-F	530.028.550	Muffler	1
1-G	560.020.360	O-Ring	10
1-H	675.068.115	Staple	2
1-J	710.015.115	Screw, Self-tapping	4
For Pumps with Piped Exhaust:			
1	031.141.000*	Air Valve Assembly	1
	(Includes all items used on 031.140.000 minus items 1-D, 1-F & 1-J)		

Air Valve Assembly Parts List

Item	Part Number	Description	Qty
⚠ 1	031.140.001	Air Valve Assembly	1
1-A	031.139.000	Sleeve and Spool Set	1
1-C	095.119.559	Body, Air Valve	1
1-D	165.096.559	Cap, Muffler	1
1-E	165.140.559	Cap, End	2
1-F	530.028.550	Muffler	1
1-G	560.020.360	O-Ring	10
1-H	675.068.115	Staple	2
1-J	710.015.115	Screw, Self-tapping	4
For Pumps with Metal Mesh Muffler or Piped Exhaust:			
⚠ 1	031.141.001	Air Valve Assembly	1
	(Includes all items used on 031.140.001 minus items 1-D, 1-F & 1-J)		

⚠ ATEX Compliant

* For pumps with stainless brass sleeve and spool set use replace last three digits with 162

Air Valve with Stroke Indicator Assembly

Note: Stroke Indicator is standard on Spill Containment models

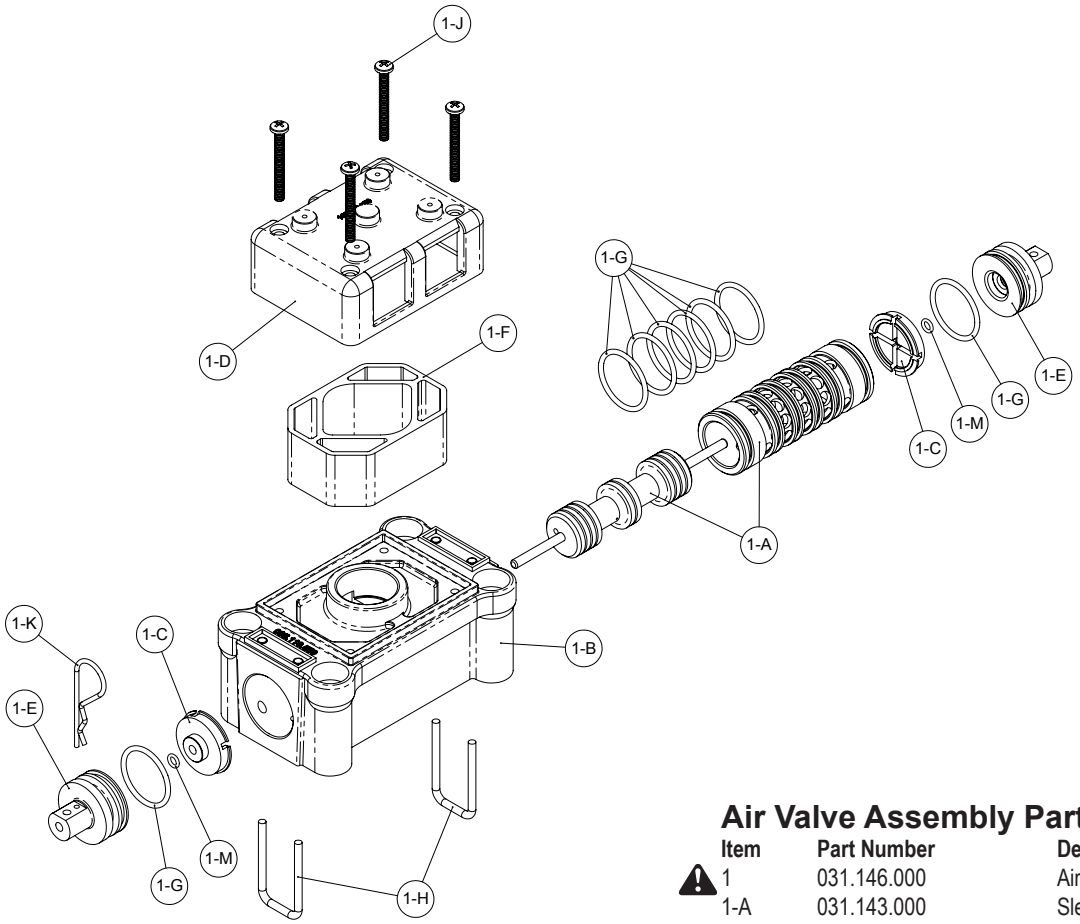

Air Distribution Valve Servicing

See repair parts drawing, remove screws.

Step 1: Remove staple retainer (1-H).

Step 2: Remove end cap (1-E), bumper (1-C).

Step 3: Remove spool part of (1-A) (caution, do not scratch).

Step 4: Press sleeve (1-A) from body (1-B).

Step 5: Inspect O-Ring (1-G) and replace if necessary.

Step 6: Lightly lubricate O-Rings (1-G) on sleeve (1-A).

Step 7: Press sleeve (1-A) into body (1-B).

Step 8: Reassemble in reverse order.

Note: Sleeve and spool (1-A) set is match ground to a specified clearance sleeve and spools (1-A) cannot be interchanged.

Air Valve Assembly Parts List

Item	Part Number	Description	Qty
⚠ 1	031.146.000	Air Valve Assembly	1
1-A	031.143.000	Sleeve and Spool Set w/Pins	1
1-B	095.119.559	Body, Air Valve	1
1-C	132.039.551	Bumper	2
1-D	165.096.559	Cap, Muffler	1
1-E	165.156.147	Cap, End	2
1-F	530.028.550	Muffler	1
1-G	560.020.360	O-Ring	8
1-H	675.068.115	Staple	2
1-J	710.015.115	Screw, Self-Tapping	4
1-K	210.008.330	Clip, Safety	1
1-M	560.029.360	O-Ring	2

For Pumps with PTFE Coated Hardware:

1	031.146.002	Air Valve Assembly	1
1-J	710.015.308	Screw, Self Tapping	4

(includes all other items on 031.146.000 above)

For Pumps with Piped Exhaust:

⚠ 1	031.147.000	Air Valve Assembly	1

(includes all items on 031.146.000 minus 1-D, 1-F, & 1-J)

ATEX Compliant

Pilot Valve Assembly

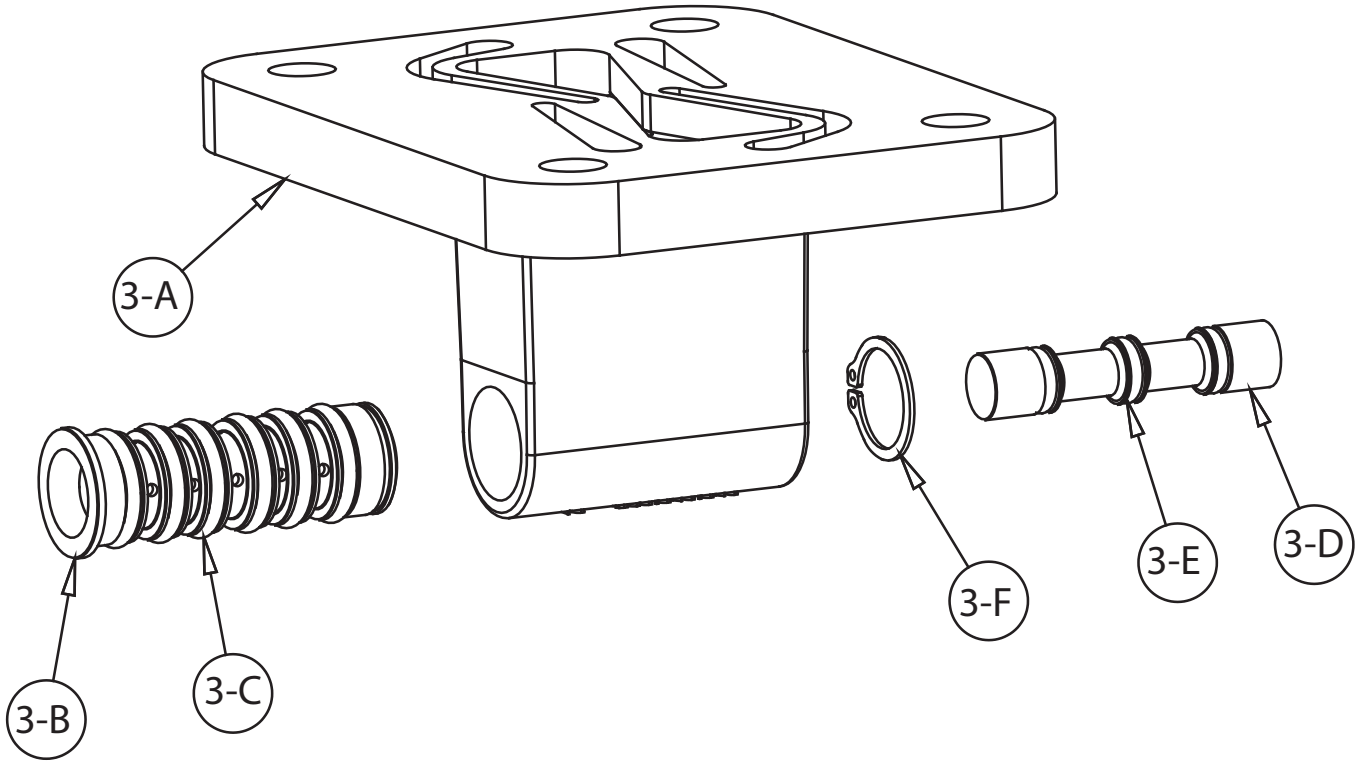

Pilot Valve Servicing

With Pilot Valve removed from pump.

Step 1: Remove snap ring (3-F).

Step 2: Remove sleeve (3-B), inspect O-Rings (3-C), replace if required.

Step 3: Remove spool (3-D) from sleeve (3-B), inspect O-Rings (3E), replace if required.

Step 4: Lightly lubricate O-Rings (3-C) and (3-E).

Reassemble in reverse order.

Pilot Valve Assembly Parts List

Item	Part Number	Description	Qty
3	095.110.558	Pilot Valve Assembly	1
3-A	095.095.558	Valve Body	1
3-B	755.052.000	Sleeve (With O-Rings)	1
3-C	560.033.360	O-Ring (Sleeve)	6
3-D	775.055.000	Spool (With O-Rings)	1
3-E	560.023.360	O-Ring (Spool)	3
3-F	675.037.080	Retaining Ring	1

Intermediate Assembly Drawing

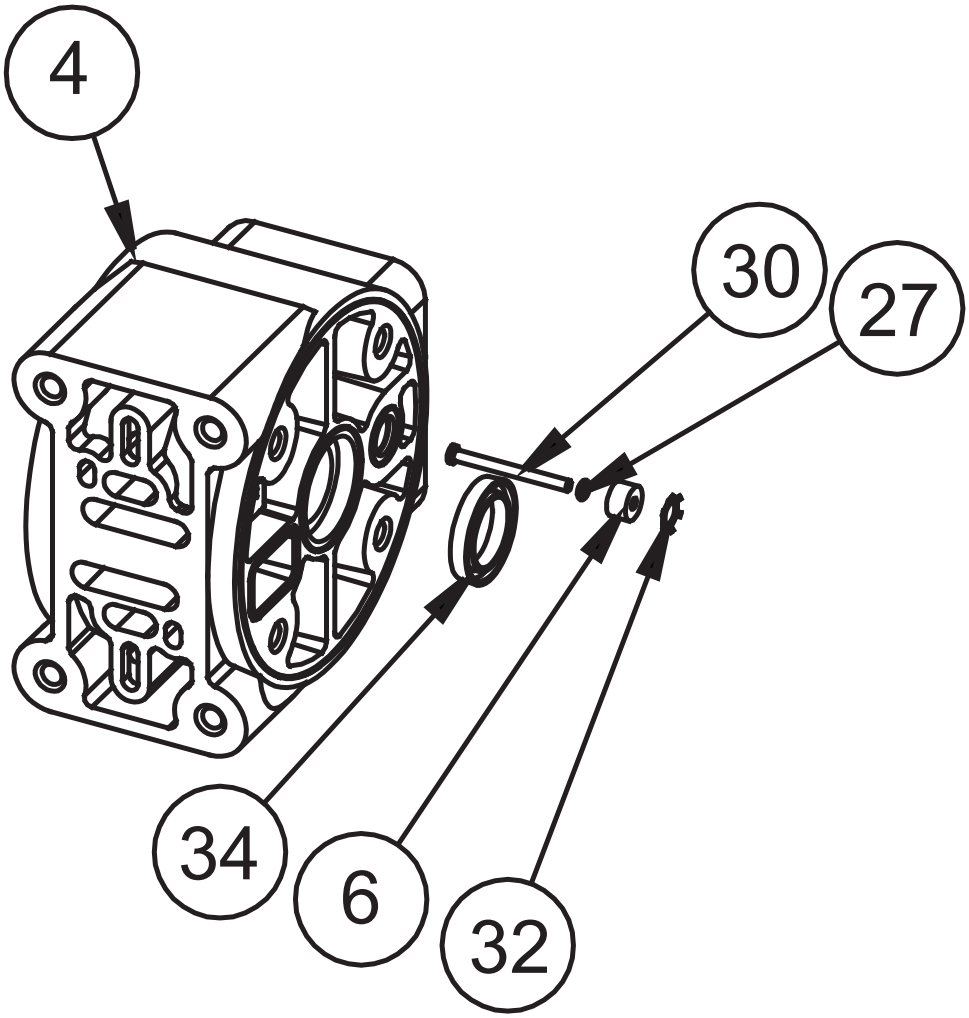

Intermediate Assembly Drawing

Step 1: Remove plunger, actuator (30) from center of intermediate pilot valve cavity.

Step 2: Remove Ring, Retaining (32), discard.

Step 3: Remove bushing, plunger (6), inspect for wear and replace if necessary with genuine parts.

Step 4: Remove O-Ring (27), inspect for wear and replace if necessary with genuine parts.

Step 5: Lightly lubricate O-Ring (27) and insert into intermediate.

Step 6: Reassemble in reverse order.

Step 7: Remove Seal, Diaphragm Rod (34).

Step 8: Clean seal area, lightly lubricate and install new Seal, Diaphragm Rod (34).

INTERMEDIATE REPAIR PARTS LIST

Item	Part Number	Description	Qty
4	114.024.551	Bracket, Intermediate	1
	114.024.559	Bracket, Intermediate	1
6	135.034.506	Bushing, Plunger	2
27	560.001.360	O-Ring	2
30	620.020.115	Plunger, Actuator	2
32	675.042.115	Ring, Retaining*	2
34	720.004.360	Seal, Diaphragm Rod	2

***Note:** It is recommended that when plunger components are serviced, new retaining rings be installed.

⚠ IMPORTANT



When the pumped product source is at a higher level than the pump (flooded suction condition), pipe the exhaust higher than the product source to prevent siphoning spills. In the event of a diaphragm failure a complete rebuild of the center section is recommended.

Diaphragm Service Drawing with Overlay

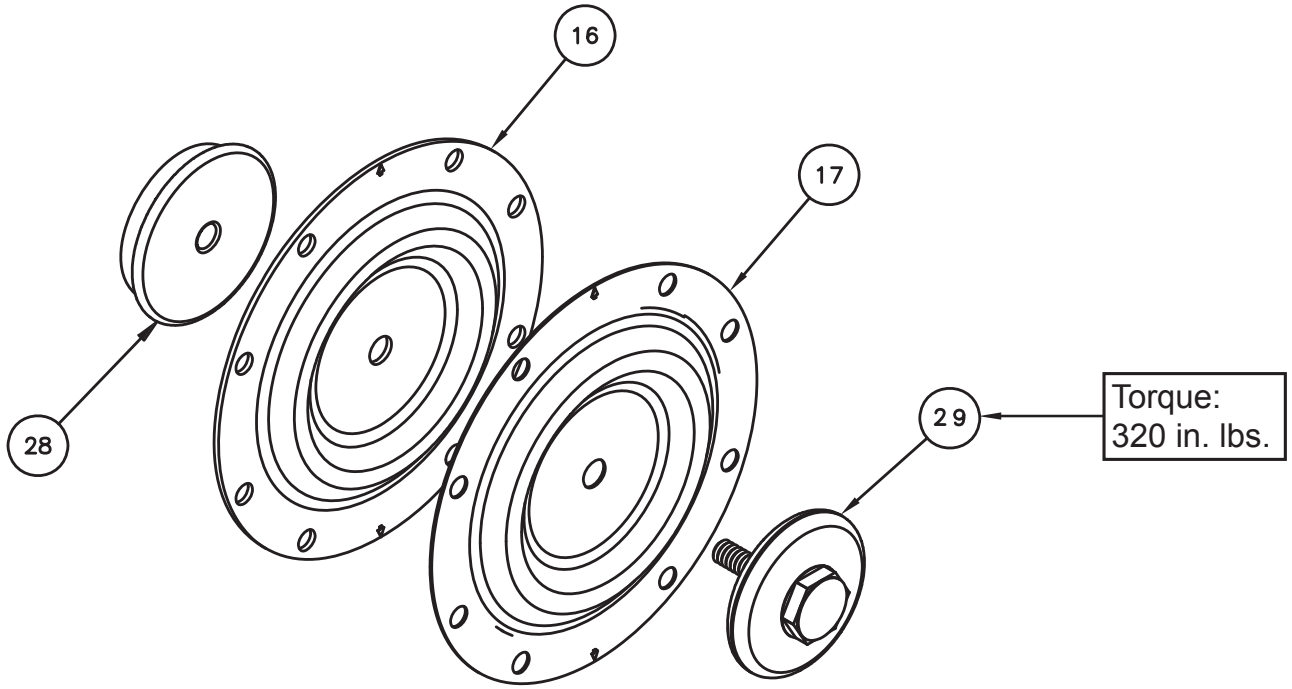

Diaphragm Service Drawing, Non-Overlay

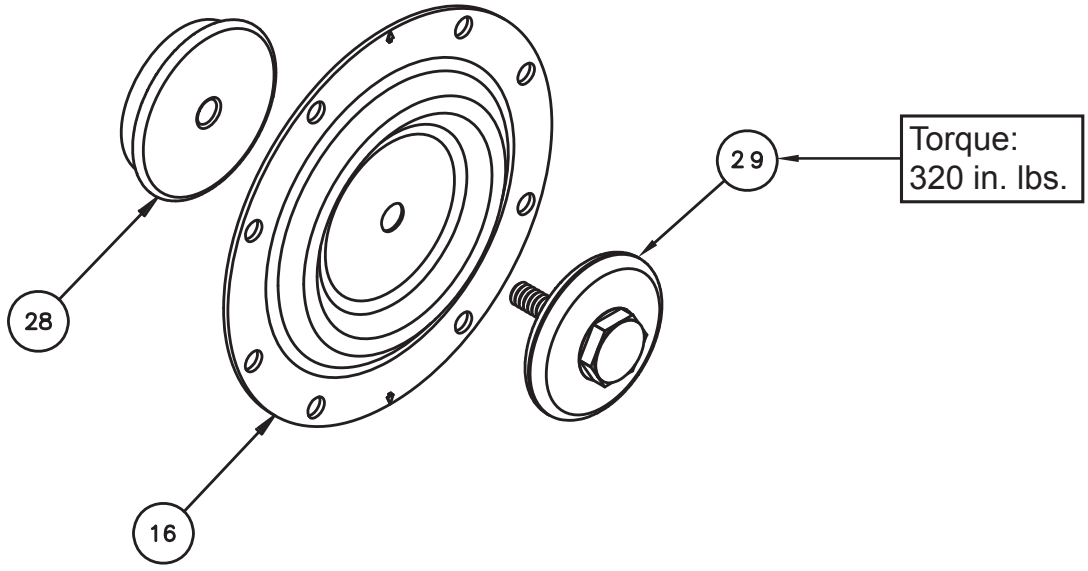

Field conversion kit 475.258.000 available for conversion from PTFE Overlay to One-Piece bonded Diaphragm

Part	Description	Qty
286.115.000	One-Piece Diaphragm	2
612.220.150	Plate, Inner Diaphragm	2

Diaphragm Servicing

Step 1: With manifolds and outer chambers removed, remove diaphragm assemblies from diaphragm rod. **DO NOT** use a pipe wrench or similar tool to remove assembly from rod. Flaws in the rod surface may damage bearings and seal. Soft jaws in a vise are recommended to prevent diaphragm rod damage.

Step 1.A: NOTE: Not all inner diaphragm plates are threaded. Some models utilize a through hole in the inner diaphragm plate. If required to separate diaphragm assembly, place assembly in a vise, gripping on the exterior cast diameter of the inner plate. Turn the outer plate clockwise to separate the assembly.

Always inspect diaphragms for wear cracks or chemical attack. Inspect inner and outer plates for deformities, rust scale and wear. Inspect intermediate bearings for elongation and wear. Inspect diaphragm rod for wear or marks.
Clean or repair if appropriate. Replace as required.

Step 2: Reassembly: There are two different types of diaphragm plate assemblies utilized throughout the Sandpiper product line: Outer plate with a threaded stud, diaphragm, and a threaded inner plate.

Outer plate with a threaded stud, diaphragm, and an inner plate with through hole. Secure threaded inner plate in a vise. Ensure that the plates are being installed with the outer radius against the diaphragm.

Step 3: Lightly lubricate, with a compatible material, the inner faces of both outer and inner diaphragm plates when using on non Overlay diaphragms (For EPDM water is recommended). No lubrication is required.

Step 4: Push the threaded outer diaphragm plate through the center hole of the diaphragm. **Note:** Most diaphragms are installed with the natural bulge out towards the fluid side. S05, S07, and S10 non–metallic units are installed with the natural bulge in towards the air side.

Step 5: Thread or place, outer plate stud into the inner plate. For threaded inner plates, use a torque wrench to tighten the assembly together. Torque values are called out on the exploded view.

Repeat procedure for second side assembly. Allow a minimum of 15 minutes to elapse after torquing, then re-torque the assembly to compensate for stress relaxation in the clamped assembly.

Step 6: Thread one assembly onto the diaphragm rod with sealing washer (when used) and bumper.

Step 7: Install diaphragm rod assembly into pump and secure by installing the outer chamber in place and tightening the capscrews.

Step 8: On opposite side of pump, thread the remaining assembly onto the diaphragm rod. Using a torque wrench, tighten the assembly to the diaphragm rod. Align diaphragm through bolt holes, always going forward past the recommended torque. Torque values are called out on the exploded view. **NEVER** reverse to align holes, if alignment cannot be achieved without damage to diaphragm, loosen complete assemblies, rotate diaphragm and reassemble as described above.

Step 9: Complete assembly of entire unit.
One Piece Diaphragm Servicing (Bonded PTFE with integral plate) The One Piece diaphragm has a threaded stud installed in the integral plate at the factory. The inner diaphragm plate has a through hole instead of a threaded hole. Place the inner plate over the diaphragm stud and thread the first diaphragm / inner plate onto the diaphragm rod only until the inner plate contacts the rod. Do not tighten. A small amount of grease may be applied between the inner plate and the diaphragm to facilitate assembly. Insert the diaphragm / rod assembly into the pump and install the outer chamber. Turn the pump over and thread the second diaphragm / inner plate onto the diaphragm rod. Turn the diaphragm until the inner plate contacts the rod and hand tighten the assembly. Continue tightening until the bolt holes align with the inner chamber holes. **DO NOT LEAVE THE ASSEMBLY LOOSE.**

⚠ IMPORTANT



Read these instructions completely, before installation and start-up. It is the responsibility of the purchaser to retain this manual for reference. Failure to comply with the recommendations stated in this manual will damage the pump, and void factory warranty.

Solenoid Shifted Air Valve

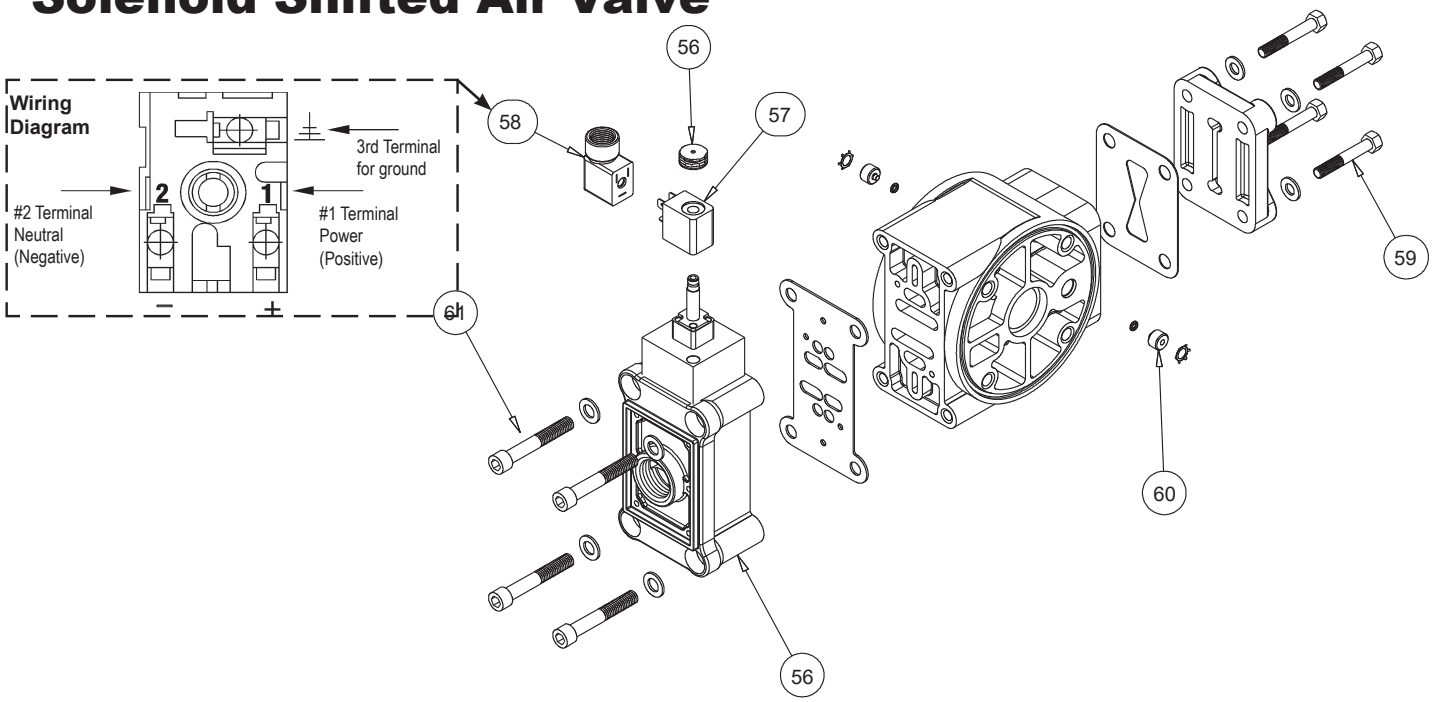

Solenoid Shifted Air Valve Parts List

(Includes All Items Used on Composite Repair Parts List Except as Shown)

Item	Part Number	Description	Qty
56	893.097.000	Solenoid Valve, NEMA4	1
57	219.001.000	Solenoid Coil, 24VDC	1
	219.004.000	Solenoid Coil, 24VAC/12VDC	1
	219.002.000	Solenoid Coil, 120VAC	1
	219.003.000	Solenoid Coil, 240VAC	1
58	241.001.000	Connector, conduit	1
59	170.045.115	Capscrew, Hex HD 5/16 - 18 x 1.25	4
60	618.051.150	Plug	2
61	171.053.115	Capscrew, Socket Head	4

FM APPROVED IEC EEX m T4

For Explosion Proof Solenoid Coils used in North America and outside the European Union.

57 △	219.009.001	Solenoid Coil, 120VAC 60 Hz	1
	219.009.002	Solenoid Coil, 240VAC 60 HZ	1
	219.009.003	Solenoid Coil, 12VDC	1
	219.009.004	Solenoid Coil, 24VDC	1
	219.009.005	Solenoid Coil, 110VAC 50 Hz	1
	219.009.006	Solenoid Coil, 230VAC 50 Hz	1

Note: Item 58 (Conduit Connector) is not required

Solenoid Shifted Operation

The Solenoid Shifted SANDPIPER has a solenoid operated, air distribution valve in place of the standard SANDPIPER's pilot operated, air distribution valve. Where a pilot valve is normally utilized to cycle the pump's air distribution valve, an electric solenoid is utilized. As the solenoid is powered, one of the pump's air chambers is pressurized while the other chamber is exhausted. When electric power is turned off, the solenoid shifts and the pressurized chamber is exhausted while the other chamber is pressurized. By alternately applying and removing power to the solenoid, the pump cycles much like a standard SANDPIPER pump, with one exception. This option provides a way to precisely control and monitor pump speed.

Before Installation

Before wiring the solenoid, make certain it is compatible with your system voltage.

*Special Conditions For Safe Use

A fuse corresponding to its rated current (max. $3*I_{rat}$ according IEC 60127-2-1) or a motor protecting switch with short-circuit and thermal instantaneous tripping (set to rated current) shall be connected in series to each solenoid as short circuit protection. For very low rated currents of the solenoid the fuse of lowest current value according to the indicated IEC standard will be sufficient. The fuse may be accommodated in the associated supply unit or shall be separately arranged. The rated voltage to the fuse shall be equal to or greater than the stated rated voltage of the magnet coil. The breakage capacity of the fuse-link shall be as high as or higher than the maximum expected short circuit current at the location of the installation (usually 1500 A). A maximum permissible ripple of 20% is valid for all magnets of direct-current design.

Ex II 2G EEx m c II T5
II 2D c IP65 T100°C

For ATEX Compliant Solenoid Coils used in the European Union

57	219.011.001	Solenoid Coil, Single mounting 12 VDC, 3.3W / 267mA	1
	219.011.002	Solenoid Coil, Single mounting 24 VDC, 3.3W / 136mA	1
	219.011.003	Solenoid Coil, Single mounting 110/120 VAC, 3.4W / 29mA	1
	219.011.004	Solenoid Coil, Single mounting 220/240 VAC, 3.4W / 15mA	1

Note: Item 37 (Conduit Connector) is not required

Compressed Air Temperature Range: Maximum Ambient Temperature to plus 50°C

Dual Port Option

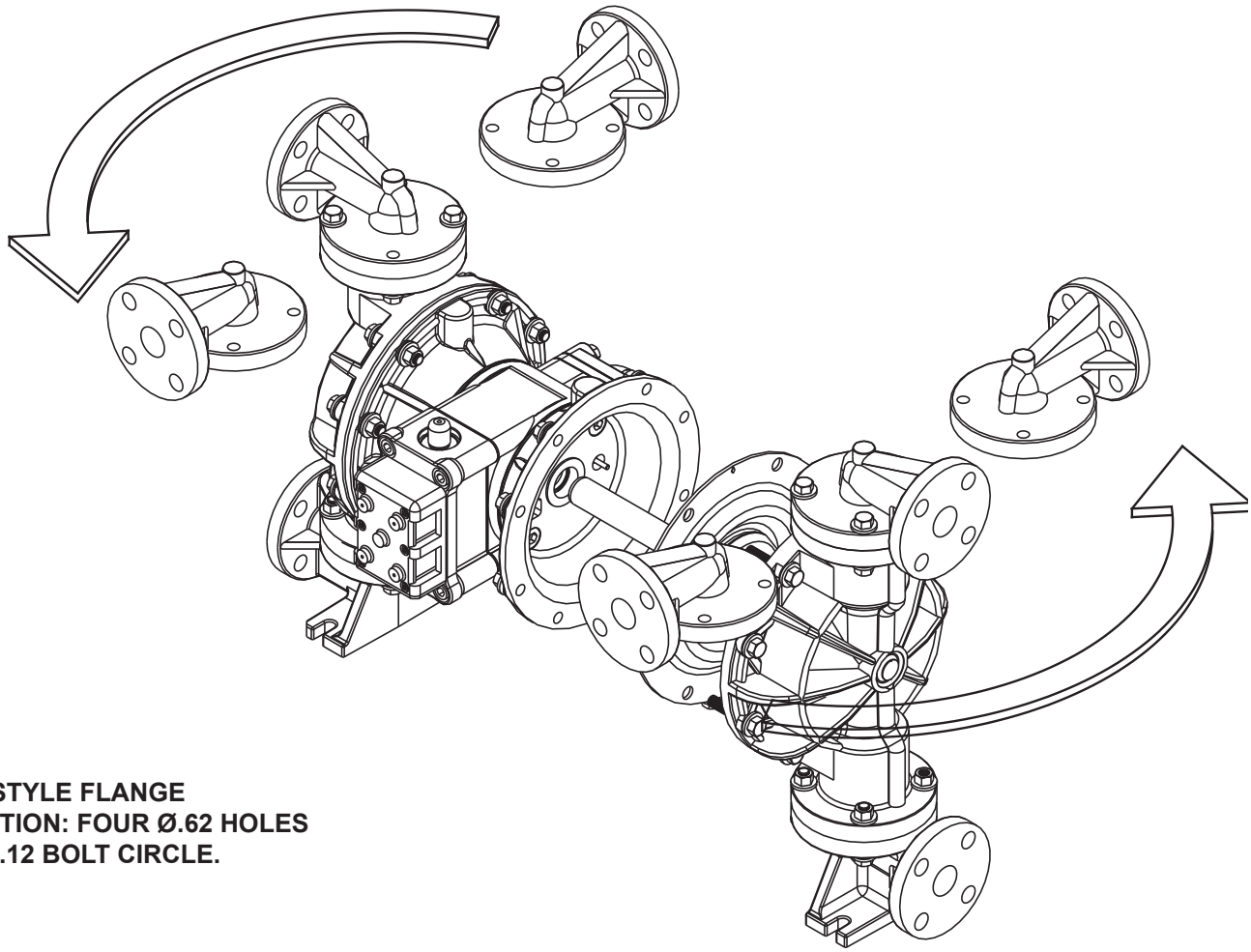

1" ANSI STYLE FLANGE CONNECTION: FOUR Ø.62 HOLES ON A Ø 3.12 BOLT CIRCLE.

DUAL PORTING OPTIONS

Several dual porting options are possible. The pump can be converted to a dual port arrangement on both the suction and the discharge ends. The porting can be configured to a single suction and a dual discharge. The porting can be changed to a dual suction and a single discharge.

The above changes are possible because the porting flange of the elbows (items 18 and 19) are designed to mate with standard 125# ANSI style 4-bolt, 1" pipe flanges.

DUAL PORTING OF BOTH SUCTION AND DISCHARGE ENDS OF THE PUMP

Converting the pump from the standard single suction and discharge porting configuration to dual porting at each end is easy. Simply remove the manifold seals, spacers, and manifolds (items 35 and 23 from pump assembly drawing) from the pump.

The discharge and suction elbows can be rotated at 90° increments (see arrows and optional positioning in the Dual Porting Drawing.

SINGLE PORTING OF THE SUCTION AND DUAL PORTING OF THE PUMP DISCHARGE

To convert the pump from the standard single suction and single discharge porting configuration to a dual discharge porting arrangement remove the only the discharge manifolds, spacers, and manifold seals. Position the discharge elbows in the desired direction at 90° increments. (See arrows and optional positioning in the Dual Porting Drawing.)

DUAL PORTING OF THE SUCTION AND SINGLE PORTING OF THE PUMP DISCHARGE

To convert the pump from the standard single suction and single discharge porting configuration to a dual suction porting arrangement remove the only the suction (bottom) manifolds, spacers, and manifold seals.

Position the suction elbows in the desired direction at 90° increments. (See arrows and optional positioning in the Dual Porting Drawing.)

Leak Detection Options Drawing

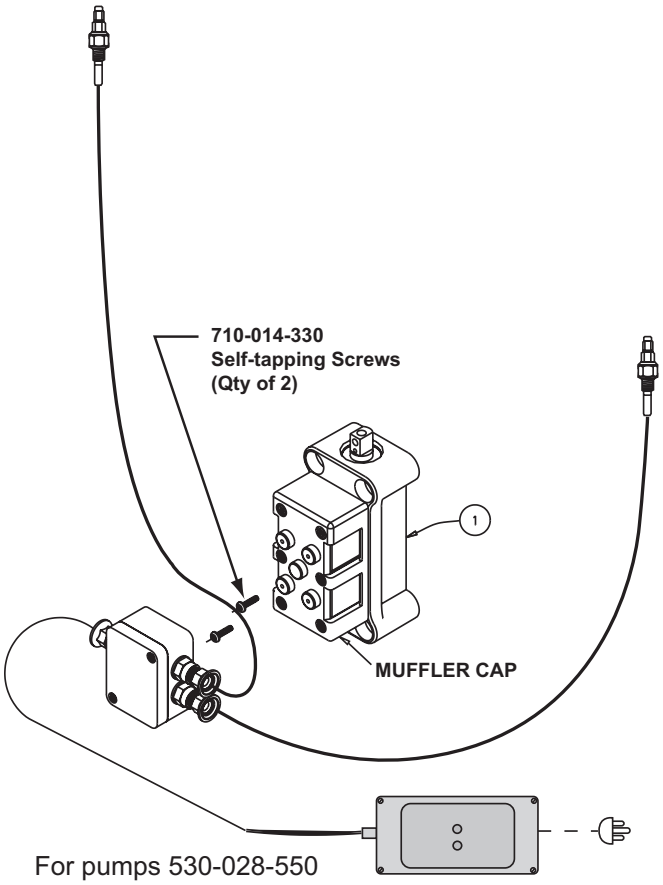

For pumps 530-028-550
Enclosed Muffler

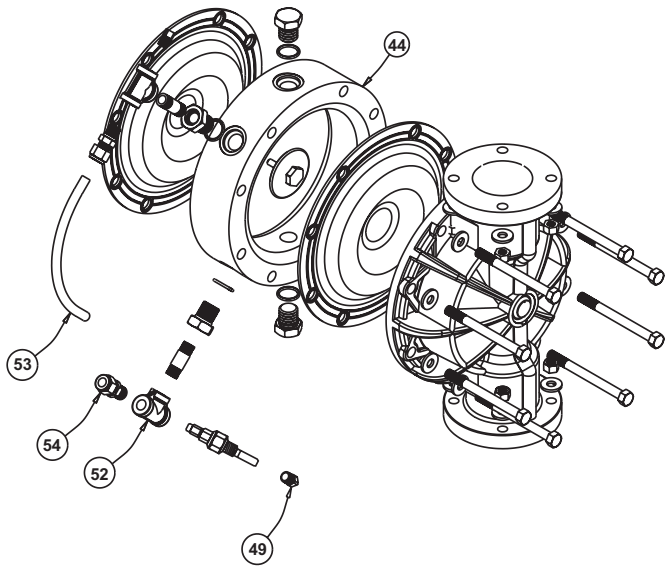

LEAK DETECTION OPTION A (ELECTRONIC)

Follow instructions found elsewhere in this manual, “Filling the Spill Containment Chambers” when installing leak detectors.

Electronic Leak Detector Installation

Kit 032.037.000	100VAC	50Hz
	or 110-120VAC	50 / 60Hz
	or 220-240VAC	50 / 60Hz
Kit 032.045.000	12-32VDC	

To install electronic leak detectors, remove the bottom ¼" NPT pipe plug on the visual sight tube (item 53). Insert leak detector into the ¼" pipe tee (item 52).

Leak Detection Option B (Mechanical)

Follow instructions found elsewhere in this manual, “Filling the Spill Containment Chambers” when installing leak detectors.

Mechanical Leak Detector Installation

Kit 031.023.110

To install mechanical leak detectors, remove the bottom ¼" NPT pipe plug on the visual sight tube (item 53). Insert leak detector into the ¼" pipe tee (item 52).

5 - YEAR Limited Product Warranty

Warren Rupp, Inc. ("Warren Rupp") warrants to the original end-use purchaser that no product sold by Warren Rupp that bears a Warren Rupp brand shall fail under normal use and service due to a defect in material or workmanship within five years from the date of shipment from Warren Rupp's factory. Warren Rupp brands include Warren Rupp®,SANDPIPER®, SANDPIPER Signature Series™, MARATHON®, Porta-Pump®, SludgeMaster™ and Tranquilizer®.

The use of non-OEM replacement parts will void (or negate) agency certifications, including CE, ATEX, CSA, 3A and EC1935 compliance (Food Contact Materials). Warren Rupp, Inc. cannot ensure nor warrant non-OEM parts to meet the stringent requirements of the certifying agencies.

~ See complete warranty at https://www.sandpiperpump.com/

SANDPIPER®

EC Declaration of Conformity

Manufacturer:
Warren Rupp, Inc.
800 N. Main Street
Mansfield, Ohio, 44902 USA

Certifies that Air-Operated Double Diaphragm Pump Models: DSB Series, DMF Series, G Series, HDB Series, HDF Series, HP Series, F Series, MS Series, S Series, SL Series, SP Series, SSB Series, T Series, U1F Series, WR Series; High Pressure Pump Models: EH Series, GH Series, SH Series; Submersible Pump Models: SMA3 Series, SPA Series; and Surge Dampener/ Suppressor Models: DA Series, TA Series comply with the European Community Directive 2006/42/EC on Machinery, according to Annex VIII. This product has used Harmonized Standard EN809:2012, Pumps and Pump Units for Liquids - Common Safety Requirements, to verify conformance.

October 3, 2022
DATE/APPROVAL/TITLE:

Technical File on record with:
DEKRA Certification B.V.
Meander 1051
6825 MJ Arnhem
The Netherlands

Signature of authorized person

Dennis Hall
Printed name of authorized person

Engineering Manager
Title

IDEX

CE

SANDPIPER®

EC Declaration of Conformity

Manufacturer:
Warren Rupp, Inc.
800 N. Main Street
Mansfield, Ohio, 44902 USA

Certifies that Air-Operated Double Diaphragm Pump Models: DSB Series, DMF Series, G Series, HDB Series, HDF Series, HP Series, F Series, MS Series, S Series, SL Series, SP Series, SSB Series, T Series, U1F Series, WR Series; High Pressure Pump Models: EH Series, GH Series, SH Series; Submersible Pump Models: SMA3 Series, SPA Series; and Surge Dampener/ Suppressor Models: DA Series, TA Series comply with the United Kingdom Statutory Instruments 2008 No. 1597, The Supply of Machinery (Safety) Regulations 2008, according to Annex VIII. This product has used Designated Standard EN809:2012, Pumps and Pump Units for Liquids - Common Safety Requirements, to verify conformance.

October 17, 2022
DATE/APPROVAL/TITLE:

Technical File on record with:
DEKRA Certification UK Limited
Stokenchurch House
Oxford Road
Stokenchurch
HP14 3SX

Signature of authorized person

Dennis Hall
Printed name of authorized person

Engineering Manager
Title

IDEX

UK CA

SANDPIPER®

ATEX

IDEX

EU Declaration of Conformity

Manufacturer:

Warren Rupp, Inc.
A Unit of IDEX Corporation
800 North Main Street
Mansfield, OH 44902 USA

This declaration of conformity is issued under the sole responsibility of the manufacturer. Warren Rupp, Inc. declares that Air Operated Double Diaphragm Pumps (AODD) and Surge Suppressors listed below comply with the requirements of Directive **2014/34/EU** and applicable harmonized standards.

Harmonized Standards:

- EN ISO 80079-36: 2016
- EN ISO 80079-37: 2016
- EN 60079-25: 2010

1. AODD Pumps and Surge Suppressors - Technical File on record with: DEKRA Certification B.V.
Meander 1051
6825 MJ Arnhem
The Netherlands

Hazardous Location Applied:

Ⓔx II 2 G Ex h IIC T5...225°C (T2) Gb
II 2 D Ex h IIIC T100°C...T200°C Db

- Metallic pump models with external aluminum components (DMF Series, EH Series, F Series, G & GH Series, HDB Series, HDF Series, MS Series, S Series, SH Series, SL Series, SPB Series, ST Series, T Series, and U1F Series)
- Conductive plastic pump models with integral muffler (PB1/4 Series, S Series, SL Series, SPE Series)
- Tranquilizer® surge suppressors (TA Series)

Ⓔx II 2 G Ex h IIB T5...225°C (T2) Gb
II 2 D Ex h IIIB T100°C...T200°C Db

- ST Series with sight tubes (VL) and HP Series because of the projected area of non-conductive external components

2. AODD Pumps - EU Type Examination Certificate No.: DEKRA 18ATEX0094X - DEKRA Certification B.V. (0344)
Meander 1051
6825 MJ Arnhem
The Netherlands

Hazardous Location Applied:

Ⓔx I M1 Ex h I Ma
II 1 G Ex h IIC T5...225°C (T2) Ga
II 1 D Ex h IIIC T100°C...T200°C Da

- Metallic pump models with no external aluminum (HDB Series, HDF Series, G Series, S Series, SPB Series)
- Conductive plastic pumps equipped with conductive muffler (S Series, SPE Series)

Ⓔx II 2 G Ex h ia IIC T5 Gb
II 2 D Ex h ia IIIC T100°C Db

- Pump models with ATEX rated pulse output kit option (HDB Series, HDF Series, PB1/4, S Series, SB Series)

Ⓔx II 2 G Ex h mb IIC T5 Gb
II 2 D Ex h mb tb IIIC T100° Db

- Pump model series S05, S1F, S15, S20, S30 equipped with ATEX rated integral solenoid option

➢ See “ATEX Details” page in user’s manual for more information
➢ See “Safety Information” page for conditions of safe use

DATE/APPROVAL/TITLE:
9 NOV 2023

Dennis Hall
Engineering Manager

B

SANDPIPER®

UKEx

IDEX

EU Declaration of Conformity

Manufacturer:

Warren Rupp, Inc.
A Unit of IDEX Corporation
800 North Main Street
Mansfield, OH 44902 USA

This declaration of conformity is issued under the sole responsibility of the manufacturer.
Warren Rupp, Inc declares that Air Operated Double Diaphragm Pumps (AODD) and Surge Suppressors listed below comply with the requirements of United Kingdom Statutory Instruments **2016 No. 1107** and all the applicable standards.

Designated Standards:

- EN ISO 80079-36: 2016
- EN ISO 80079-37: 2016
- EN 60079-25: 2010

1. AODD Pumps and Surge Suppressors - Technical File on record with: DEKRA Certification UK Limited
Stokenchurch House
Oxford Road
Stokenchurch
HP14 3SX

Hazardous Location Applied:



II 2 G Ex h IIC T5...225°C (T2) Gb
II 2 D Ex h IIIC T100°C...T200°C Db

- Metallic pump models with external aluminum components (DMF Series, EH Series, F Series, G & GH Series, HDB Series, HDF Series, MS Series, S Series, SH Series, SL Series, SPB Series, ST Series, T Series, and U1F Series)
- Conductive plastic pump models with integral muffler (PB1/4 Series, S Series, SL Series, SPE Series)
- Tranquilizer® surge suppressors (TA Series)



II 2 G Ex h IIB T5...225°C (T2) Gb
II 2 D Ex h IIIB T100°C...T200°C Db

- ST Series with sight tubes (VL) and HP Series because of the projected area of non-conductive external components

➢ See “ATEX Details” page in user’s manual for more information
➢ See “Safety Information” page for conditions of safe use

DATE/APPROVAL/TITLE:
9 NOV 2023

Dennis Hall
Engineering Manager