CALL TOLL FREE 877-742-2878 FOR SALES AND SUPPORT
Return to BurtProcess.com

SBX

1-1/8" x 1-1/8" Hose Centrifugal Transportation Circulator

The SBX is designed for directional booster applications of water or coolant. Cost effective design with splash / weather proof 12 or 24V DC motor.



SPECIFICATIONS:

Materials Of Construction	Aluminum
Flow	Up to 18 GPM
Head Feet	Up to 15'
Impeller	2.5" semi-open nickel steel
Drive Options	12 & 24V DC brushed electric motor
Seal	Carbon / silicon carbide or silicon carbide / silicon carbide or carbon / ceramic
Base	Stamped steel with (4) vibration isolating grommets
Temperature	Operation in ambient temperatures up to 200°F, Use with fluids to 220°F and sustained fluid temps up to 210°F

Application

- Agricultural
- Commercial
- Industrial
- Marine
- OEM
- Transportation

Features

- Convenient directional volute port configuration
- Dual 18" long 14 AWG red (positive) black (negative) power leads
- Splash and weather resistant motor enclosure

SBX
1.125 HOSE

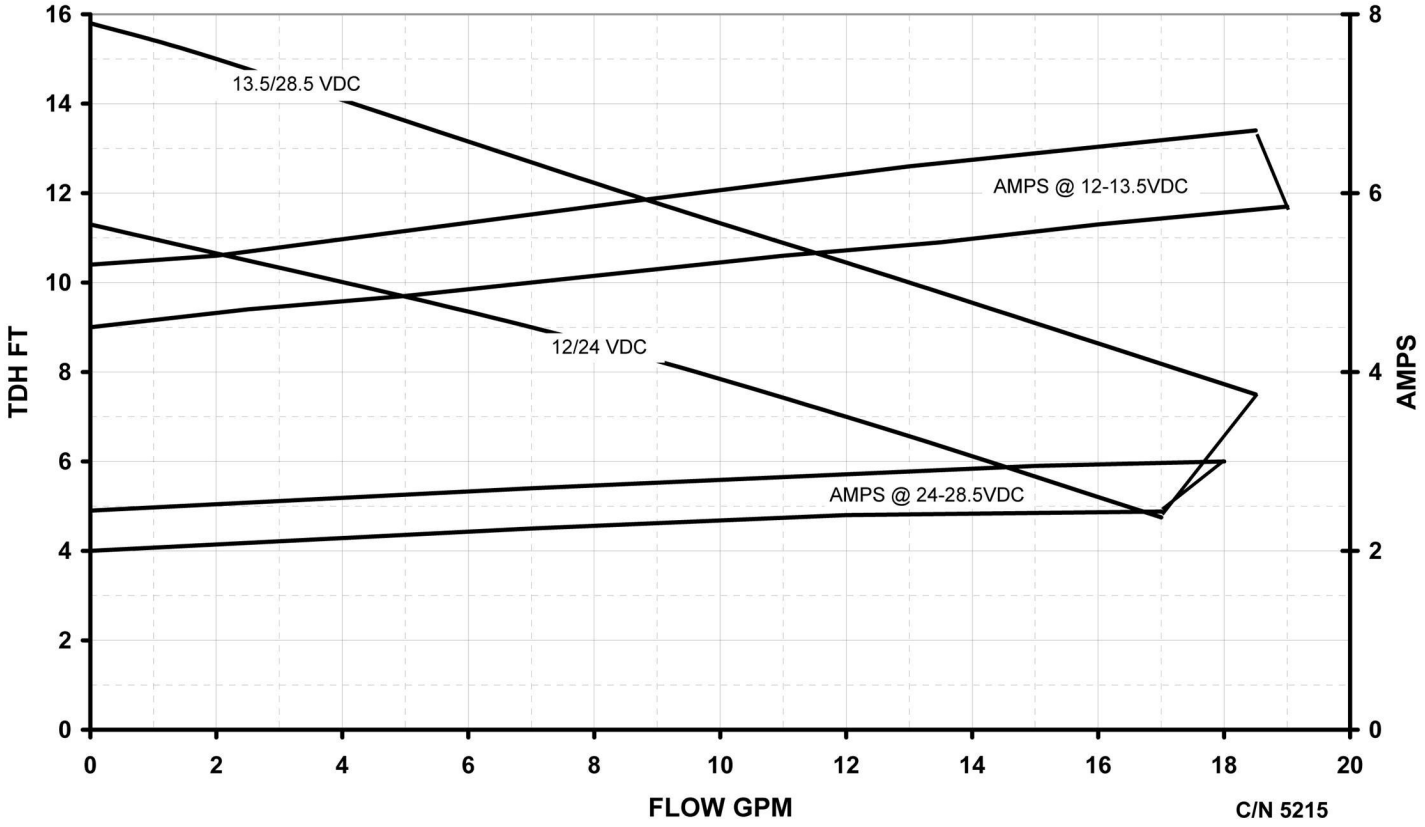

34800 BENNETT - FRASER, MI 48026-1686
(586) 293-8240 - FAX (586) 293-8469
(800) 563-8006 - www.mppumps.com

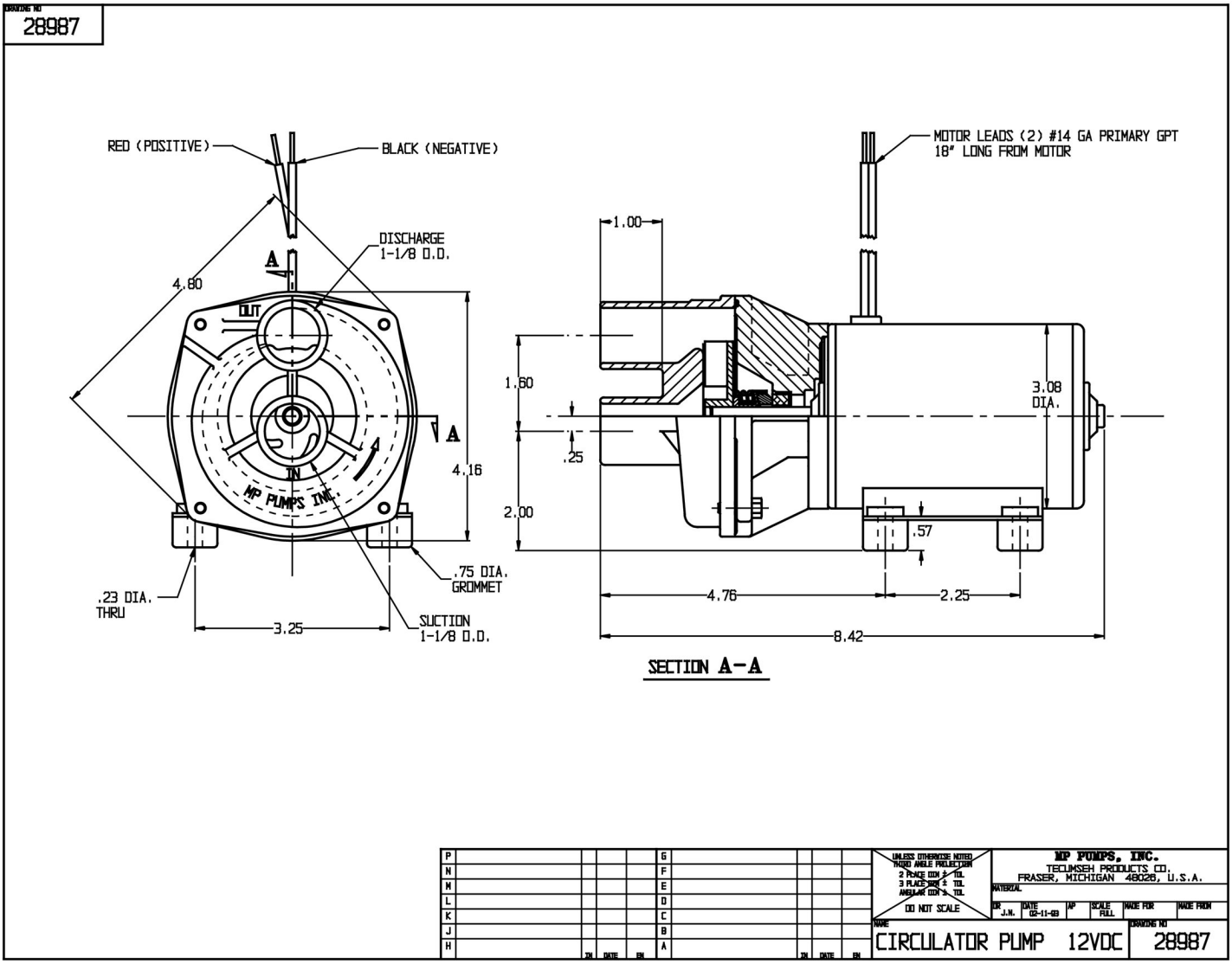
DRAWING NO
28987
RED (POSITIVE)
BLACK (NEGATIVE)
DISCHARGE
1-1/8 O.D.
4.80
A
OUT
IN
MP PUMPS INC.
4.16
.23 DIA.
THRU
3.25
.75 DIA.
GROMMET
SUCTION
1-1/8 O.D.
MOTOR LEADS (2) #14 GA PRIMARY GPT
18" LONG FROM MOTOR
1.00
1.60
.25
2.00
3.08
DIA.
.57
4.76
2.25
8.42
SECTION A-A
UNLESS OTHERWISE NOTED
THIRD ANGLE PROJECTION
2 PLACE DIM ± TOL
3 PLACE DIM ± TOL
ANGULAR DIM ± TOL
DO NOT SCALE
MP PUMPS, INC.
TECUMSEH PRODUCTS CO.
FRASER, MICHIGAN 48026, U.S.A.
MATERIAL
DR J.N.
DATE 02-11-93
AP
SCALE FULL
MADE FOR
MADE FROM
NAME
CIRCULATOR PUMP 12VDC
DRAWING NO
28987

29924

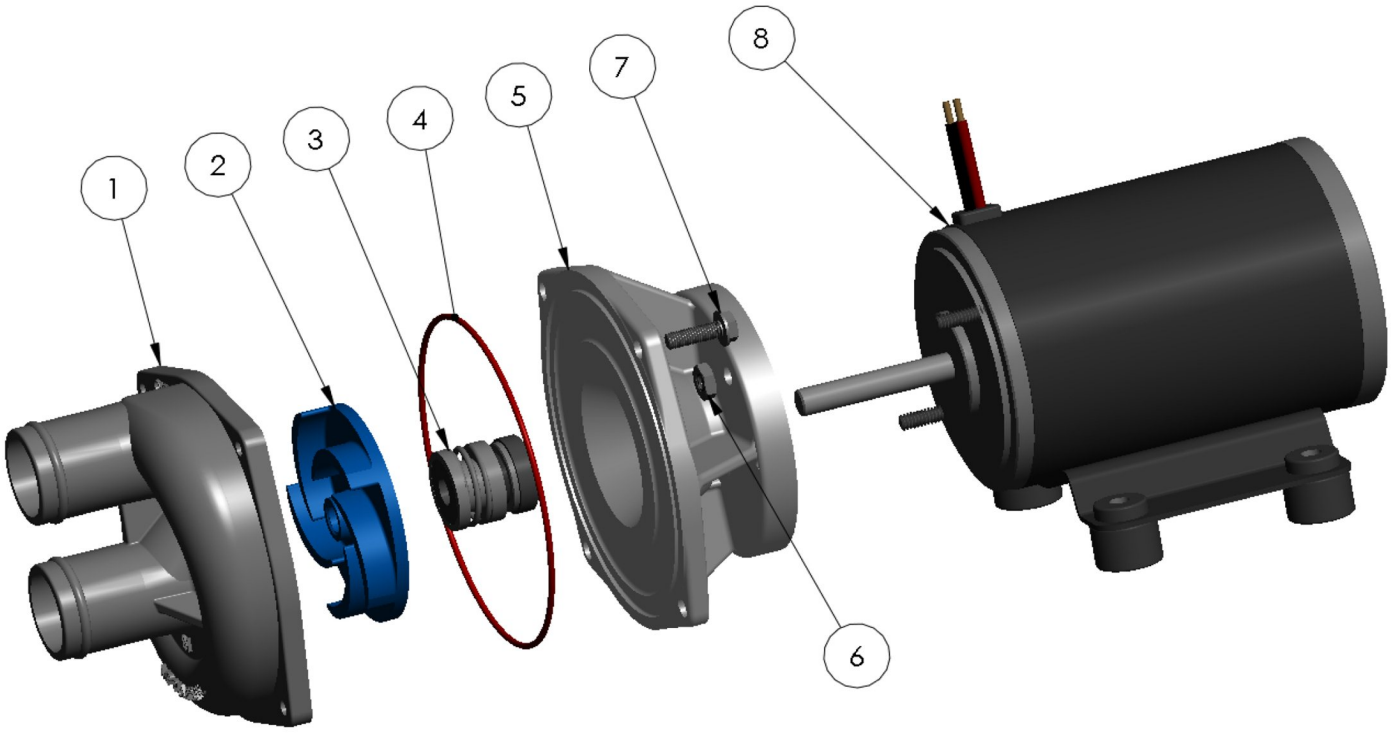

	ITEM NO.	PART NO.	DESCRIPTION	QTY.
	1	33851	VOLUTE	1
	2	21587	IMPELLER 2.50 DIA.	1
*	3	28984	SEAL ASSY. 7/8" TYPE 16	1
*	4	28613	O RING - VITON	1
	5	28733	ADAPTER	1
	6	21543	HEX NUT 10-32	2
	7	28834	HEX CAPSCREW 10-32 X 5/8 S. TAP	4
	8	28985	EL. MOTOR 12 VDC	1

*- RECOMMENDED REPLACEMENT PARTS

34800 BENNETT - FRASER, MI 48026-1686
(586) 293-8240 - FAX (586) 293-8469
(800) 563-8006 - www.mppumps.com