CALL TOLL FREE 877-742-2878 FOR SALES AND SUPPORT Return to BurtProcess.com

SERVICE & OPERATING MANUAL

Original Instructions

Certified Quality

SAI GLOBAL
ISO 9001 Certified
ISO 14001 Certified

Member of Hydraulic Institute

UK CA

SLUDGEMASTER®

SMA3,6AM1

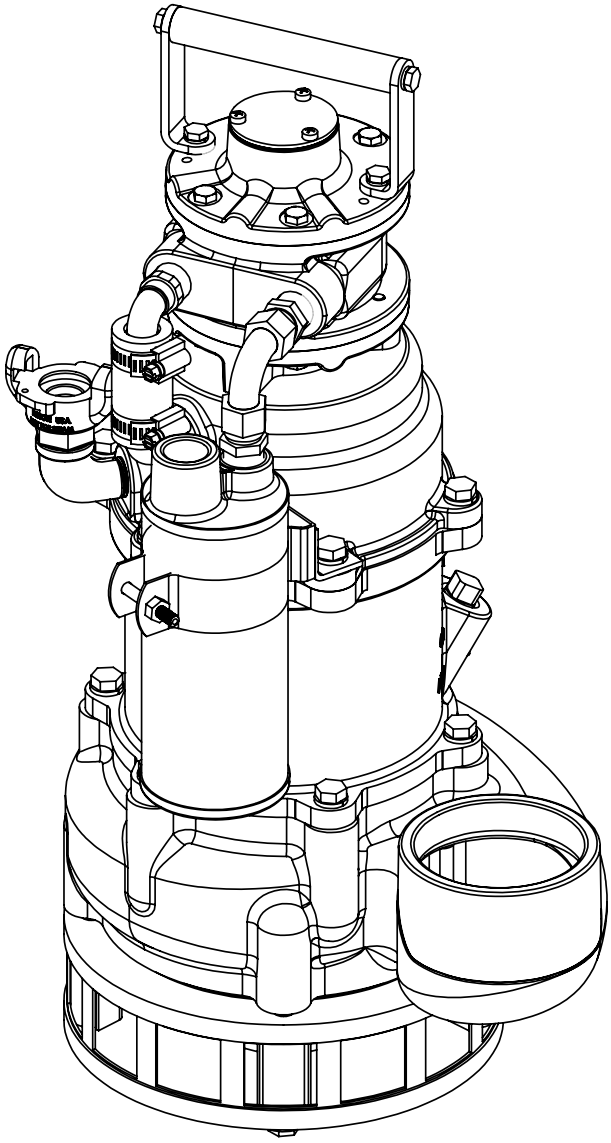

Warren Rupp, Inc.
A Unit of IDEX Corporation
800 N. Main St.,
Mansfield, Ohio 44902 USA
Telephone 419.524.8388
Fax 419.522.7867
SANDPIPERPUMP.COM

IDEX

© Copyright 2022 Warren Rupp, Inc.
All rights reserved

SANDPIPER®
A WARREN RUPP, INC. BRAND
SANDPIPERPUMP.COM

Performance

CAPACITY
- 0 to 300 gallons per minute (0 to 1140 liters per minute)

SOLIDS-HANDLING
- Up to 1.5 in. (40 mm)

MAX OPERATING PRESSURE
- 100 psi (6.89 bar)

MATERIAL OF CONSTRUCTION
- Wetted-Aluminum
- Non-Wetted-Aluminum

PORTING
- 3" NPT

Performance based on water at ambient temperature.

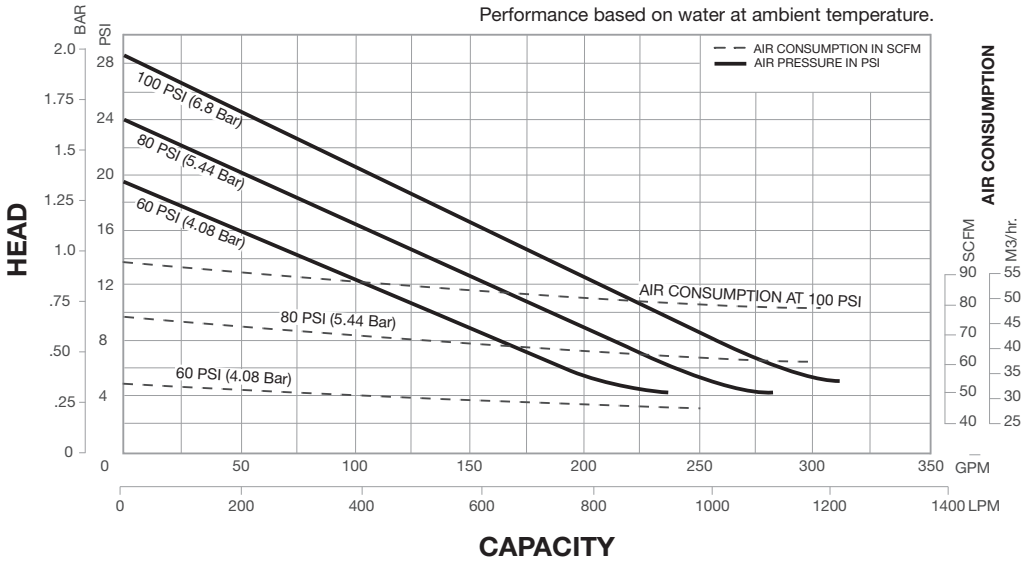

Dimensional Drawing

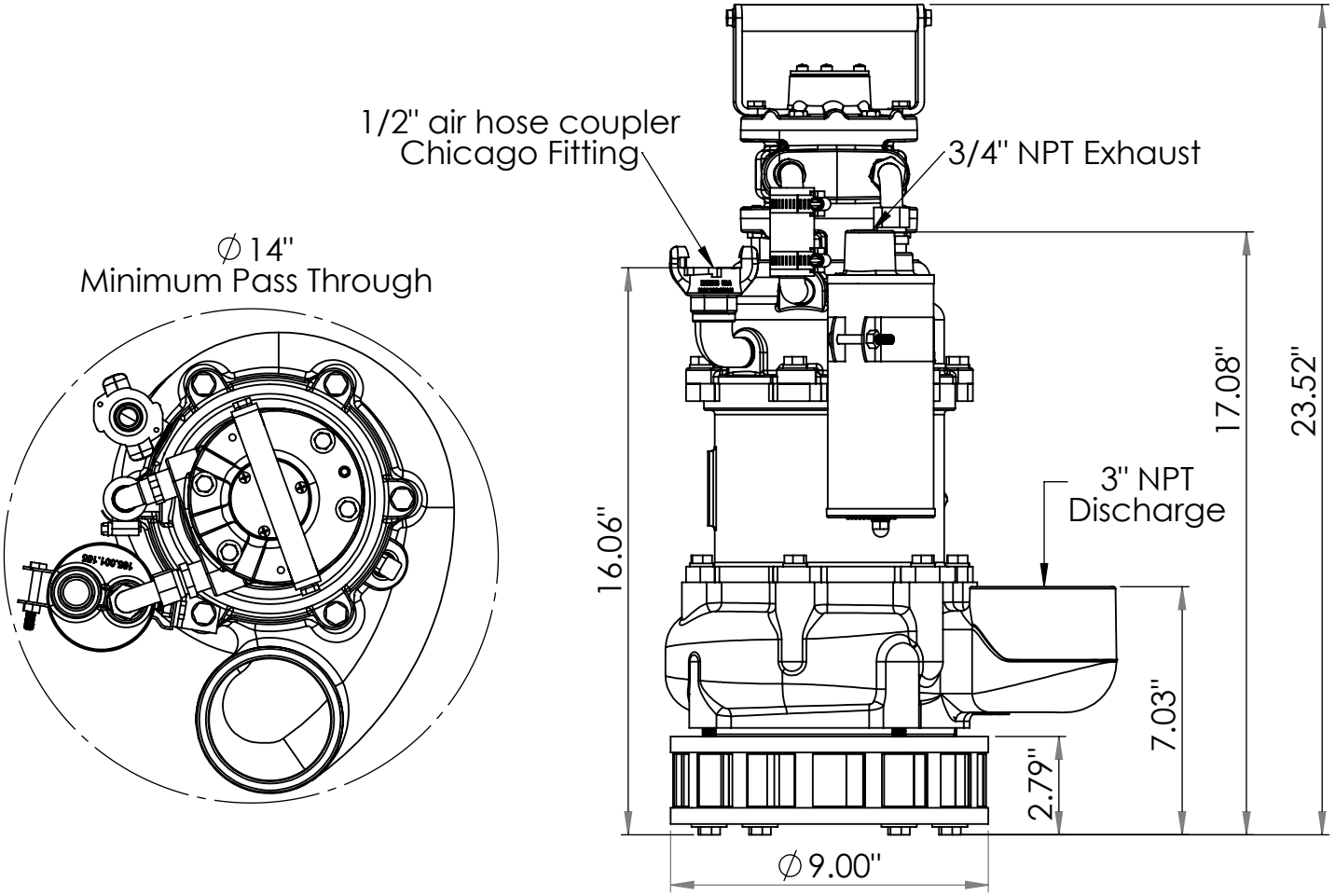

Operation Instructions



Read the safety warnings and instructions in this manual before pump installation and start-up. Failure to comply with the recommendations stated in this manual could damage the pump and void factory warranty.



Airborne particles and loud noise hazards. Wear eye and ear protection.

The SludgeMaster has been tested to ensure proper operation prior to shipment from the factory. The oil reservoir has been partially filled at testing with lubricant and should be filled completely prior to operation. When reservoir is full, the pump will not require refilling for approximately 50 hours of use. (See Lubrication Instructions below).

The pump is equipped with a muffler located on the side of the unit. A ¾" NPT exhaust port is located on top of the muffler, which provides a way to extend the pump exhaust port above the liquid level being pumped. The exhaust port must be extended above the liquid level to prevent liquid and foreign material from entering the unit's air motor. This can be done with a rigid plastic pipe or hose. For operation, connect an air supply to the pump air inlet, and submerge the unit into the liquid to be pumped. The unit requires 80 SCFM at a maximum at 100 PSI (6.89 barg) air inlet pressure for operation. Operation at pressures in excess of 100 PSI (6.89 barg) is not recommended.

When handling liquids with large stones or similar solid objects, it is recommended to run the unit at full speed. This will provide greater inertia when handling the heavier objects and will help lessen potential stoppage of the unit due to objects becoming lodged between the impeller and pump housing. Should an object become lodged between these two items and prevent pump operation, first remove the air-line supply from the unit. Then, insert a rod or bar through a hole at the bottom of the strainer into the impeller vanes and bump the impeller backwards (clockwise facing strainer end) until free. The strainer can be removed if necessary for better access to free the object, however this normally is not required. The unit can then be reconnected to the air supply for further operation.

Lubrication:

The only, regular servicing required for the unit is maintaining the oil reservoir. This is just as important for proper lubrication as the oil supply is for an engine. A one-quart capacity oil reservoir is provided for bearing and shaft seal lubrication. Five drops of oil per minute is automatically dispensed into the air stream for continuous lubrication of the air motor. This helps prevent rust formation due to moisture in the unit's air supply. Check and refill the reservoir to the oil fill plug regularly with a premium quality ISO Grade 32 hydraulic oil that is formulated to provide wear protection and rust/corrosion protection. The automatic oiler will consume approximately 1 pint of oil in 50 hours of operation. The oil reservoir should be completely drained and refilled after approximately 100 hours of operation to remove accumulated moisture.

It is beneficial to pour a small amount of oil into the air inlet connection and run the unit for a few minutes prior to storing for long periods.

This unit is not harmed by running dry, or without liquid.

Permanent Installations:

For permanent installations, remove item 65 (tube and filter assembly) and plug the hole with a 1/8" pipe plug. Fill the reservoir of item 26 (governor housing) and install a lubricator in the air supply line prior to the pump. Please note that the oil should be a premium quality ISO Grade 32 hydraulic oil that is formulated to provide wear protection and rust/corrosion protection. Set the lubricator for a usage rate of 1 pint every 50 hours. The unit's air motor will then be lubricated by the air-line lubricator, and the bearing will be lubricated by the oil in the governor housing reservoir.

Disassembly:

The following disassembly instructions are provided to allow access to the pump's seal components and is not representative of a complete pump teardown.

Remove the six bolts and hardware from the motor housing (item 25). This will allow the removal of the complete air motor (item 29) and motor housing from the unit by pulling up on the pump's handle assembly. The filter spool and filter element (items 60 & 20) are then exposed and can be removed (reference Figure 1). The lower half of the jaw type flexible coupling (item 13) is threaded onto the pump shaft and needs removed. Insert a drift pin through the exposed hole in the shaft to prevent rotation and remove the coupling using a pipe wrench (turning counterclockwise, reference Figure 2). Do not use the jaws of the coupling to loosen as they can be broken.

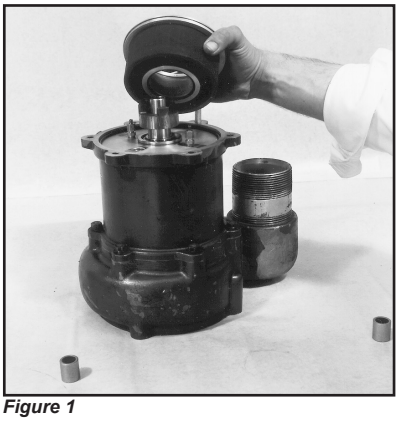

Figure 1

Remove the spacer (item 59) from the shaft and then remove the governor housing assembly from the unit (items 15, 26, and 64-66, reference Figure 3). The ring retainer and seal ring (items 45 and 49) will also be removed along with the governor housing. To access the seal ring (item 49) O-ring seal (item 39), remove the ring retainer (item 51). The seal ring will then drop out of the governor housing assembly. The intermediate housing (item 24) can then be removed by removing the applicable six bolts and hardware.

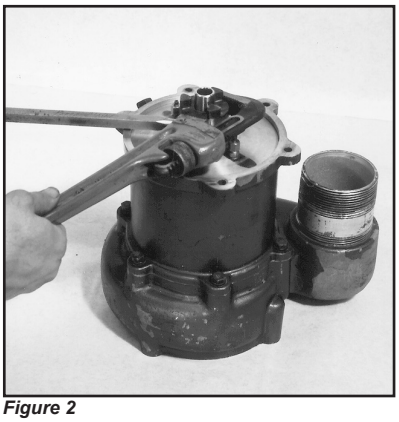

Figure 2

Remove the strainer assembly which is secured by the bottom four cap screws as well as the suction cover (items 63 and 14). This will allow access to the pump impeller. Insert a block of wood, the handle of a hammer, or similar between the impeller vane and the pump casing to prevent rotation (reference Figure 4). Turn the shaft counterclockwise via a drift pin inserted through a hole in the pump shaft to remove.

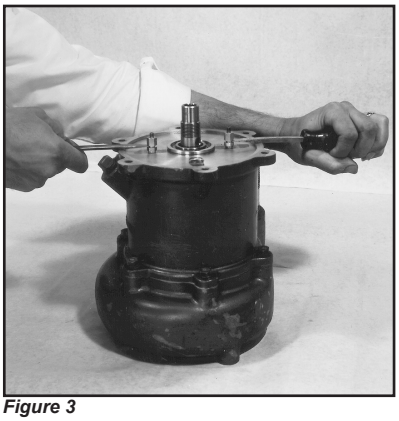

Figure 3

Remove the wear plate from the pump (item 43) by removing the Qty: 2 cap nuts from the volute (item 9). This then allows access to the ring retainer (item 53) which allows removal of the remainder of the shaft assembly and bearing housing (item 27) from the volute and provides access to the bearing housing O-ring seal (item 40).

The shaft assembly can then be removed from the bearing housing. Remove the ring retainer (item 52) located at the top of the bearing housing (item 27) in order to gain access to the shaft seal (item 54).

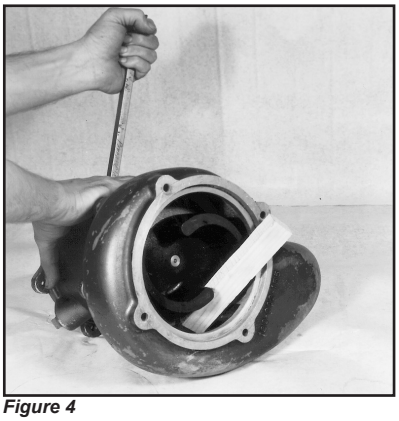

Figure 4

Reassembly:

The following assembly instructions are provided as instruction to rebuild the unit after it has been disassembled to replace the pump's seal components.

Lightly oil or grease the bottom half (rubber and stainless disc portion) of the shaft seal (item 54) and place into the bearing housing (item 27) (rubber should be in contact with the bearing housing) and press into place. Invert the shaft so that the threaded end of the shaft is upward. Lightly oil or grease the rubber U-cup of the upper half of the shaft seal and place the entire upper half of the shaft seal onto the shaft. The retainer plate and spring of the shaft seal should be downward, with the U-cup portion of the shaft seal almost flush with the bottom of the shaft threads.

Lightly oil or grease the inside of the bearing housing (item 27) and insert the shaft assembly (threaded end down) into the bearing housing. Press the shaft assembly into the bearing housing until the ball bearing (item 1) is fully seated. Note that after the ball bearing is fully seated and the compression force removed, it may come up again on its own. Replace the oil seal (item 33) and press the new oil seal into the oil seal retainer (item 47) until flush. Replace the O-ring seal (item 41) on the oil seal retainer and lightly oil both the O-ring and oil seal.

Place the oil seal retainer over the shaft until sitting on top of the ball bearing (item 1). Ensure that the U-cup portion of the oil seal is downward. Press the oil seal retainer down into the bearing housing and secure in place with the ring retainer (item 52).

Replace the O-ring (item 40) for the bearing housing and insert into the volute (item 9). Secure into place with the ring retainer (item 53). Re-install the wear plate, and impeller to the unit. Replace the suction cover gaskets (item 21) and re-install the suction cover components. Reference the dis-assembly instructions and exploded view for any additional details.

Replace the volute O-ring seal (item 38) and re-install the intermediate housing (item 24) by securing the applicable fasteners. Replace the seal ring (item 49) O-ring seal (item 39) and insert the seal ring up through the governor housing assembly and secure in place with the ring retainer (item 51). Replace the governor housing assembly O-ring seal (item 36) and lightly oil or grease. Place the governor housing assembly into the intermediate housing. Re-install the spacer (item 59) onto the shaft.

Replace the bottom O-ring seal (item 38) for the motor housing (item 25) as well as the O-ring seal (item 35) for the filter spool (item 60). Re-install the lower half of the jaw type flexible coupling (item 13) using a pipe wrench. Do not use the jaws of the coupling to loosen as they can be broken. Reference the dis-assembly instructions and exploded view for any additional details.

Install the filter element (item 20) and the filter spool (item 60) and replace the upper O-ring seal (item 37) for the motor housing. Ensure the spider spacer (item not shown, reference the "Coupling Assembly" drawing below) is installed in the lower half of the jaw type flexible coupling (item 13). Lower the air motor (item 29) and motor housing (item 25) into place slowly to feel for proper coupling engagement. When the coupling is properly engaged, the air motor and motor housing can be pressed down by hand. Do not force the assembly together via installing the air motor fasteners.

If the air motor and motor housing is lifted back up when aligning the coupling, ensure that the upper O-ring seal (item 37) for the motor housing is in its proper position. If this O-ring is out of position during assembly, air will by-pass the governor and over-speeding can occur. Fill the pump with the recommended oil through the plug (item 44) on the side of the intermediate housing and run the unit dry to check for oil leaks.

Composite Repair Parts Drawing - Upper

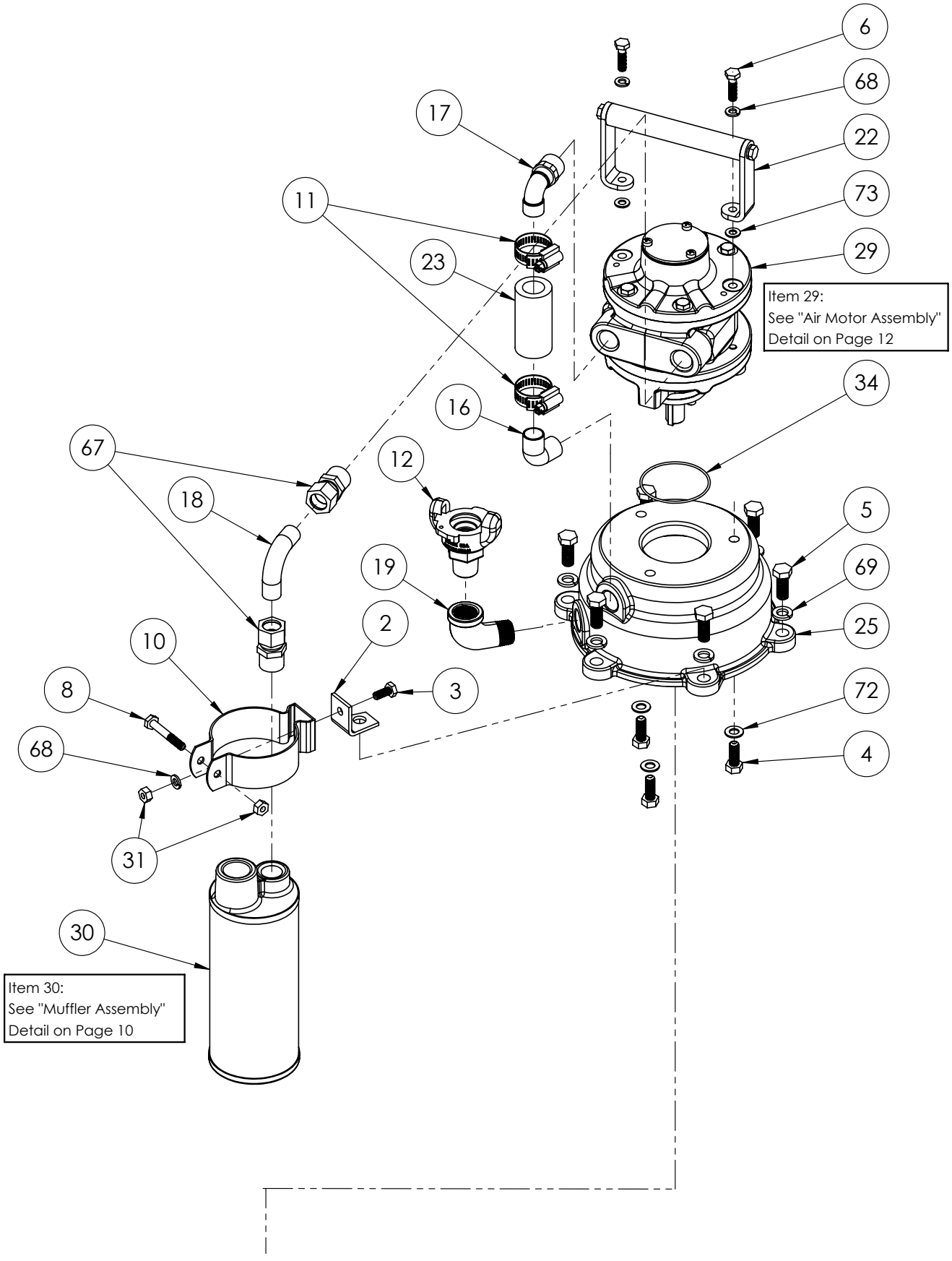

Composite Repair Parts Drawing - Lower

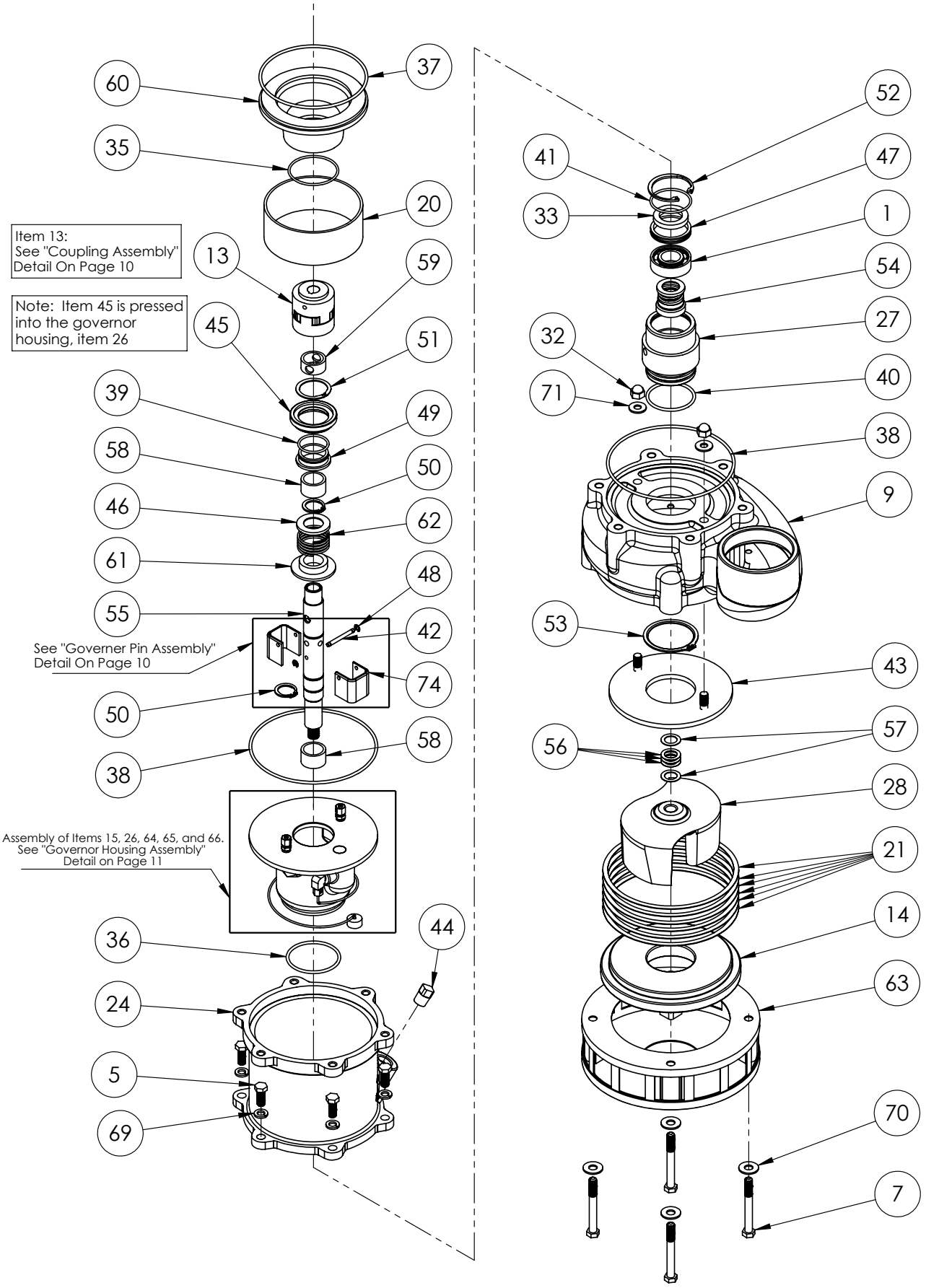

Sludge-Master - SMA3,6AM1. Pump BOM

Item	Part Number	Description	Qty
1	070.002.000	Bearing, Ball	1
2	115.004.080	Bracket, Muffler	1
3	170.002.330	Capscrew, Hex Hd 1/4-20 X 5/8	1
4	170.005.330	Capscrew, Hex Hd 5/16-18 X 7/8	3
5	170.006.330	Capscrew, Hex Hd 3/8-16 X 1	12
6	170.007.115	Capscrew, Hex Hd 1/4-28 X 1	2
7	170.033.330	Capscrew, Hex Hd 3/8-16 X 3-1/4	4
8	170.063.330	Capscrew, Hex Hd 1/4-20 X 1-3/4	1
9	180.002.155	Volute	1
10	200.004.330	Clamp, Muffler	1
11	200.005.115	Clamp, Hose	2
12	254.004.000	Coupler, Air Hose	1
13	255.001.000	Coupling, Flexible	1
14	258.003.010	Cover, Suction	1
15	312.003.000	Elbow, Metering Line	1
16	312.004.162	Elbow	1
17	312.006.000	Elbow, Motor Inlet	1
18	312.007.180	Elbow, Copper	1
19	312.008.335	Elbow, Street, 1/2" NPT	1
20	320.002.000	Filter Element	1
◯ 21	360.004.440	Gasket	7
22	406.001.000	Handle Assembly	1
23	427.006.000	Hose	1
24	430.007.155	Housing, Intermediate	1
25	430.008.155	Housing, Motor	1
26	430.009.155	Housing, Governor	1
27	430.010.150	Housing, Bearing	1
28	444.002.010	Impeller	1
29*	525.003.000	Air Motor Assembly	1
30*	530.001.000	Muffler Assembly	1
31	545.003.330	Nut, Hex 1/4-20	4
32	546.001.115	Nut, Cap 3/8-16	2
◯ 33	552.001.000	Seal, Oil	1
◯ 34	560.005.360	O-Ring	1
◯ 35	560.006.360	O-Ring	1
◯ 36	560.007.360	O-Ring	1
◯ 37	560.008.360	O-Ring	1
◯ 38	560.009.360	O-Ring	2
◯ 39	560.011.360	O-Ring	1
◯ 40	560.012.360	O-Ring	1
◯ 41	560.013.360	O-Ring	1
42	590.002.115	Pin, Governor	1
43	612.002.080	Plate, Wear	1
44	618.005.330	Plug, Pipe 1/2" NPT	1
45	670.002.162	Retainer, Sealing Ring	1
46	670.003.115	Retainer, Spring	1
47	670.004.162	Retainer, Oil Seal	1
48	675.001.115	Ring, Retainer	2
49	675.002.165	Ring, Seal	1
50	675.003.080	Ring, Retainer	2
51	675.004.000	Ring, Retainer	1
52	675.005.000	Ring, Retainer	1
53	675.006.000	Ring, Retainer	1
◯ 54	720.002.000	Seal, Shaft	1
55	730.009.120	Shaft	1
56	740.002.115	Shim (.010)	3
57	740.003.115	Shim (.030)	2
58	755.001.000	Sleeve, Bearing	2
59	770.001.162	Spacer	1
60	775.002.155	Spool, Filter	1
61	775.003.162	Spool, Governor	1
62	780.002.115	Spring, Governor	1
63	800.003.330	Strainer Assembly	1
64	860.022.180	Tubing	2
65	861.001.000	Tube & Filter Assembly	1
66	866.006.162	Connector, Male	2
67	866.007.162	Connector, Male	2
68	900.001.330	Washer, Lock 1/4	3
69	900.005.330	Washer, Lock 3/8	11
70	901.005.330	Washer, Flat 3/8	4
71	901.009.330	Washer, Flat 5/16	2
72	901.014.180	Washer, Flat Sealing	3
73	901.024.180	Washer, Flat Sealing	2
74	914.002.330	Weight, Governor	2

Parts not shown:

770.013.000	Spacer, Spider	1
— Reference Coupling Assembly Drawing		

LEGEND:

◯ = Items contained within 476.031.000 - Elastomer Kit

□ = Items contianed within 476.030.000 - Motor Part Kit

Note: *Kits contain components specific to the material codes.*

* = Component(s) of assembly included in repair kit. Reference below assembly drawing(s) BOM's for applicable items

Material Codes - The Last 3 Digits of Part Number

000.....Assembly, sub-assembly; and some purchased items
010.....Cast Iron
015.....Ductile Iron
020.....Ferritic Malleable Iron
080.....Carbon Steel, AISI B-1112
110.....Alloy Type 316 Stainless Steel
111.....Alloy Type 316 Stainless Steel (Electro Polished)
112.....Alloy C
113.....Alloy Type 316 Stainless Steel (Hand Polished)
114.....303 Stainless Steel
115.....302/304 Stainless Steel
117.....440-C Stainless Steel (Martensitic)
120.....416 Stainless Steel (Wrought Martensitic)
148.....Hardcoat Anodized Aluminum
150.....6061-T6 Aluminum
152.....2024-T4 Aluminum (2023-T351)
155.....356-T6 Aluminum
156.....356-T6 Aluminum
157.....Die Cast Aluminum Alloy #380
158.....Aluminum Alloy SR-319
162.....Brass, Yellow, Screw Machine Stock
165.....Cast Bronze, 85-5-5-5
166.....Bronze, SAE 660
170.....Bronze, Bearing Type, Oil Impregnated
180.....Copper Alloy
305.....Carbon Steel, Black Epoxy Coated
306.....Carbon Steel, Black PTFE Coated
307.....Aluminum, Black Epoxy Coated
308.....Stainless Steel, Black PTFE Coated
309.....Aluminum, Black PTFE Coated
313.....Aluminum, White Epoxy Coated
330.....Zinc Plated Steel
332.....Aluminum, Electroless Nickel Plated
333.....Carbon Steel, Electroless Nickel Plated
335.....Galvanized Steel
337.....Silver Plated Steel
351.....Food Grade Santoprene®
353.....Geolast; Color: Black
354.....Injection Molded #203-40 Santoprene® Duro 40D +/-5; Color: RED
356.....Hytrel®
357.....Injection Molded Polyurethane
358.....Urethane Rubber (Some Applications) (Compression Mold)
359.....Urethane Rubber
360.....Nitrile Rubber Color coded: RED
363.....FKM (Fluorocarbon) Color coded: YELLOW
364.....EPDM Rubber Color coded: BLUE
365.....Neoprene Rubber Color coded: GREEN
366.....Food Grade Nitrile
368.....Food Grade EPDM
371.....Philthane (Tuftane)
374.....Carboxylated Nitrile
375.....Fluorinated Nitrile
378.....High Density Polypropylene
379.....Conductive Nitrile
408.....Cork and Neoprene
425.....Compressed Fibre
426.....Blue Gard
440.....Vegetable Fibre
500.....Delrin® 500
502.....Conductive Acetal, ESD-800
503.....Conductive Acetal, Glass-Filled
506.....Delrin® 150
520.....Injection Molded PVDF Natural color
540.....Nylon
542.....Nylon
544.....Nylon Injection Molded
550.....Polyethylene
551.....Glass Filled Polypropylene
552.....Unfilled Polypropylene
555.....Polyvinyl Chloride
556.....Black Vinyl
557.....Unfilled Conductive Polypropylene
558.....Conductive HDPE
559.....Glass Filled - Conductive Polypropylene
570.....Rulon II®
580.....Ryton®
600.....PTFE (virgin material) Tetrafluorocarbon (TFE)
603.....Blue Gylon®
604.....PTFE
606.....PTFE
607.....Envelon
608.....Conductive PTFE
610.....PTFE Encapsulated Silicon
611.....PTFE Encapsulated FKM
632.....Neoprene/Hytrel®
633.....FKM/PTFE
634.....EPDM/PTFE
635.....Neoprene/PTFE
637.....PTFE, FKM/PTFE
638.....PTFE, Hytrel®/PTFE
639.....Nitrile/TFE
643.....Santoprene®/EPDM
644.....Santoprene®/PTFE
656.....Santoprene® Diaphragm and Check Balls/EPDM Seats
661.....EPDM/Santoprene®
666.....FDA Nitrile Diaphragm, PTFE Overlay, Balls, and Seals
668.....PTFE, FDA Santoprene®/PTFE

- Delrin and Hytrel are registered tradenames of E.I. DuPont.
- Nylatron is a registered tradename of Polymer Corp.
- Gylon is a registered tradename of Garlock, Inc.
- Santoprene is a registered tradename of Exxon Mobil Corp.
- Rulon II is a registered tradename of Dixion Industries Corp.
- Ryton is a registered tradename of Phillips Chemical Co.
- Valox is a registered tradename of General Electric Co.

RECYCLING

Many components of SANDPIPER® AODD pumps are made of recyclable materials. We encourage pump users to recycle worn out parts and pumps whenever possible, after any hazardous pumped fluids are thoroughly flushed.

Coupling Assembly

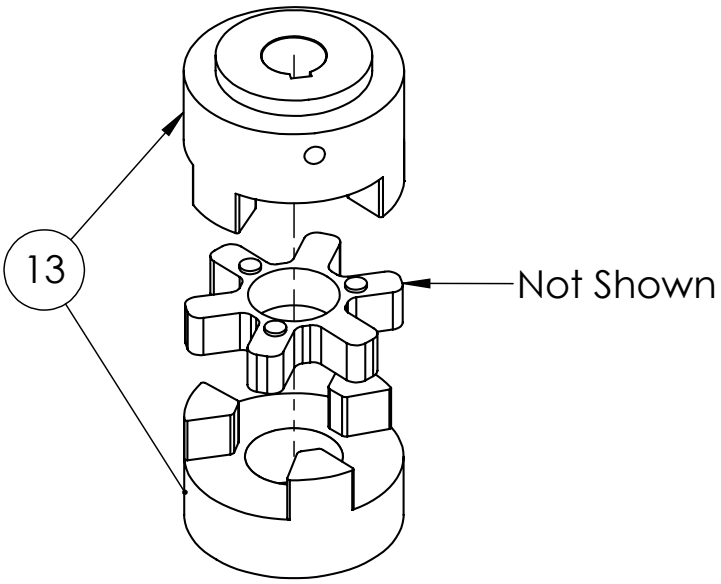

Sludge-Master - SMA3 Coupling Assembly

Item	Part Number	Description	Qty
13	255.001.000	Coupling, Flexible	1
Not Shown	770.013.000	Spacer, Spider	1

Governor Pin Assembly

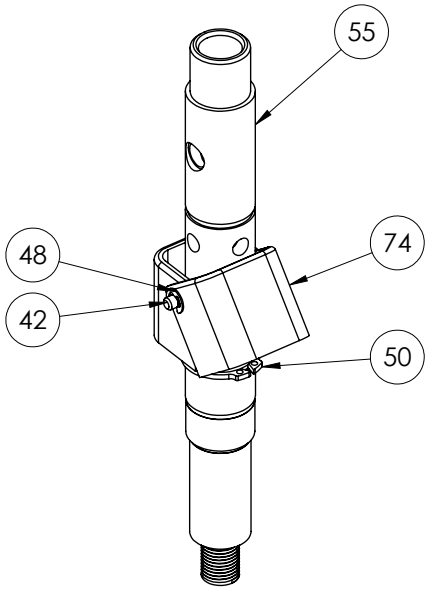

Sludge-Master - SMA3 Governor Pin Assembly

Item	Part Number	Description	Qty
42	590.002.115	Pin, Governor	1
48	675.001.115	Ring, Retainer	2
50	675.003.080	Ring, Retainer	1
55	730.009.120	Shaft	1
74	914.002.330	Weight, Governor	2

Muffler Assembly

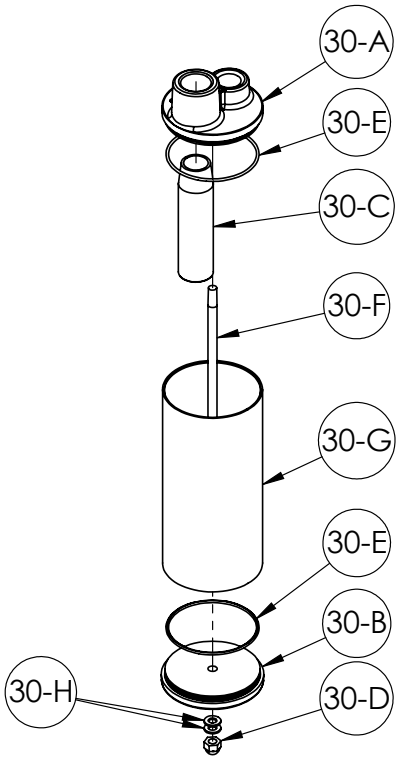

Sludge-Master - SMA3 530.001.000 Muffler Assembly

Item	Part Number	Description	Qty
30-A	165.001.155	Cap, Upper	1
30-B	165.002.155	Cap, Lower	1
30-C	538.001.555	Nipple, Pipe 3/4" NPT X 4	1
30-D	546.002.115	Nut, Cap 1/4-20	1
30-E	560.199.360	O-Ring	2
30-F	685.001.080	Rod, Muffler	1
30-G	860.009.150	Tube, Muffler	1
30-H	901.024.180	Washer, Flat Sealing	2

LEGEND:

= Items contained within 476.031.000 - Elastomer Kit

= Items contianed within 476.030.000 - Motor Part Kit

Note: *Kits contain components specific to the material codes.*

Governor Housing Assembly

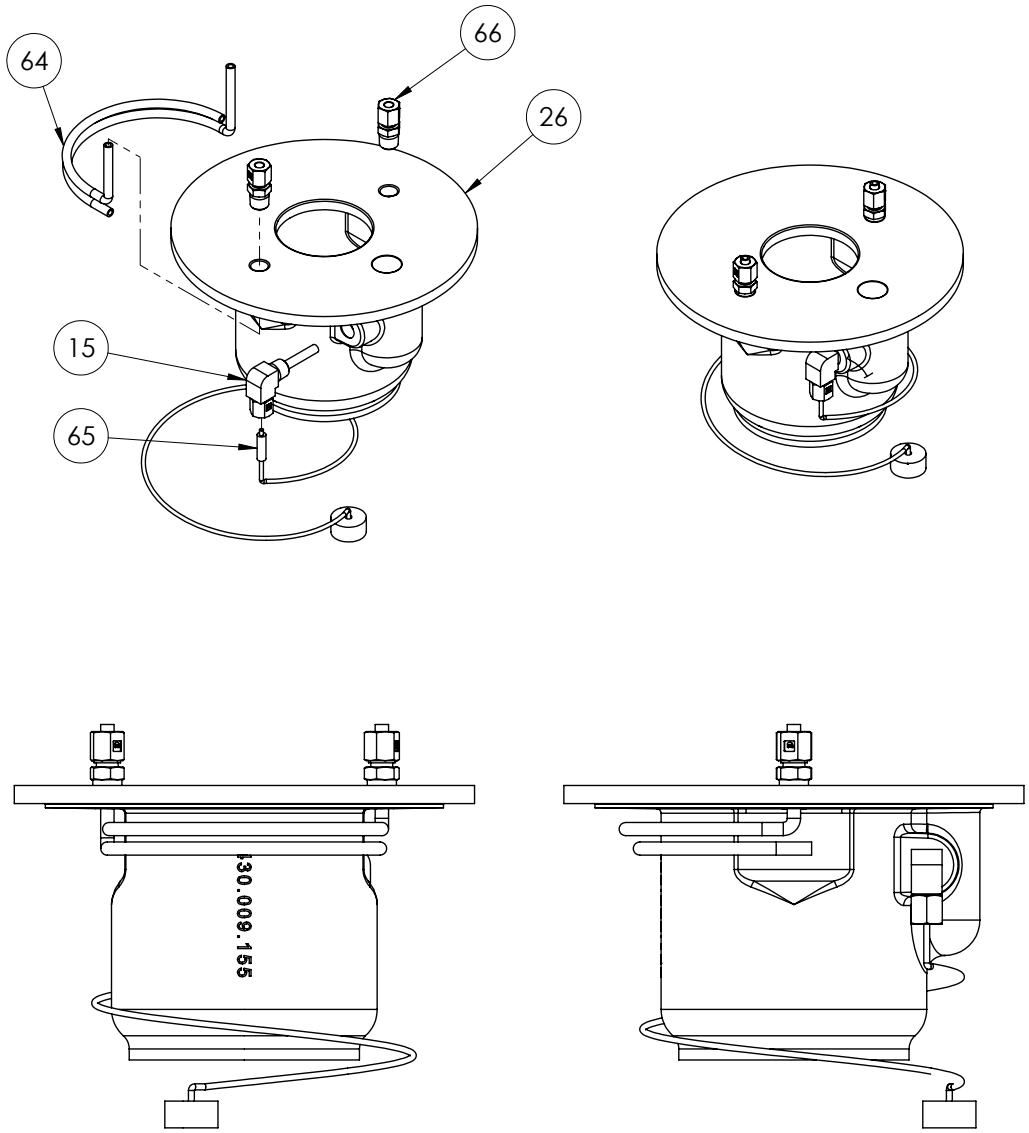

Sludge-Master - SMA3 Governor Housing Assembly

Item	Part Number	Description	Qty
15	312.003.000	Elbow, Metering	1
26	430.009.155	Housing, Governor	1
64	860.022.180	Tubing, Copper	2
65	861.001.000	Tube & Filter Assembly	1
66	866.006.162	Connector, Male	2

Air Motor Assembly

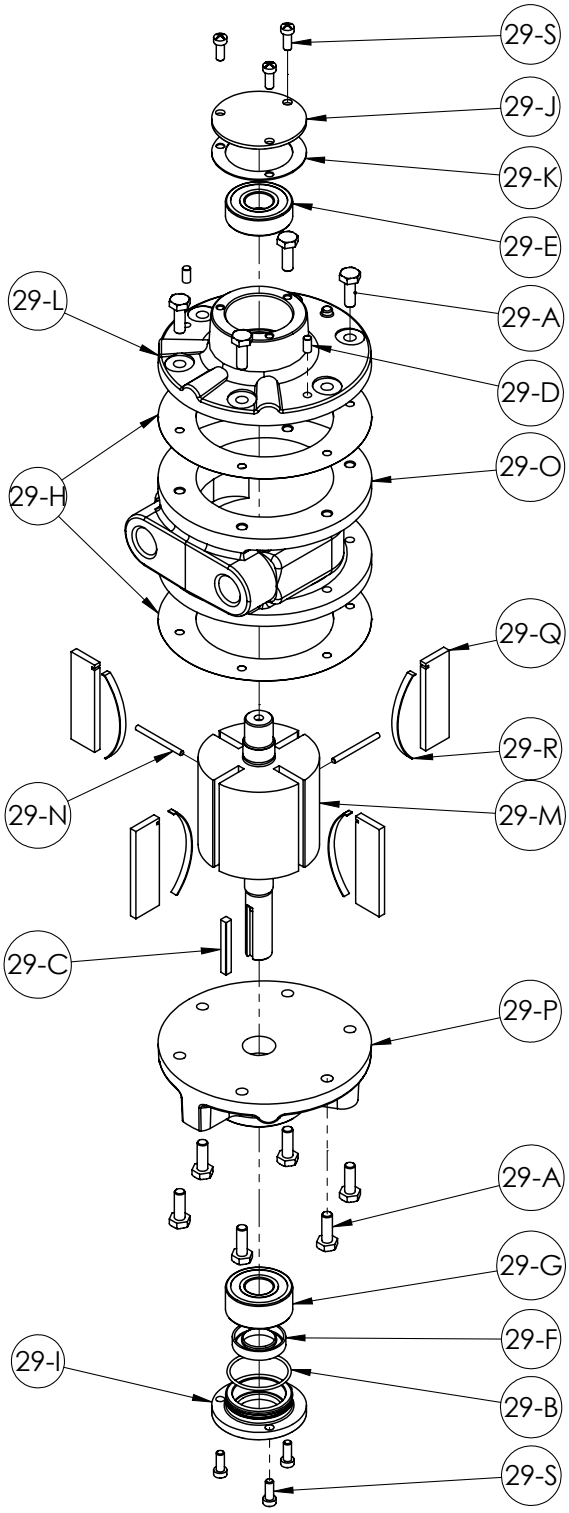

Sludge-Master - SMA3 525.003.000 Air Motor Assembly

Item	Part Number	Description	Qty
29-A	170.008.115	Capscrew, Hex Hd 1/4-28 X 3/4	10
29-B	560.003.360	O-Ring	1
29-C	AB-136	Key	2
29-D	AB-162	Pin, Dowel	1
29-E	AC-437	Bearing, Dead	1
29-F	AC-849	Seal, Shaft	1
29-G	AD-638-A	Bearing, Drive	1
29-H	AD-641-F	Gasket, End Plate	2
29-I	AD-642-A	End Cap, Dead	1
29-J	AD-643	End Cap, Dead	1
29-K	AD-644	Gasket, End Cap	1
29-L	AD-651	End Plate, Dead	1
29-M	AD-652	Rotor Assembly	1
29-N	AD-655-A	Pin, Push	2
29-O	AD-665	Body	1
29-P	AD-666	End Plate, Drive	1
29-Q	AD-691	Vane	4
29-R	AD-692	Spring, Vane	4
29-S	BB-508	Capscrew, Phil Hd 10-32 X 1/2	6

LEGEND:

= Items contained within 476.031.000 - Elastomer Kit

= Items contianed within 476.030.000 - Motor Part Kit

Note: *Kits contain components specific to the material codes.*

Sludgemaster - SMA3, 6AM1 — Cutaway View

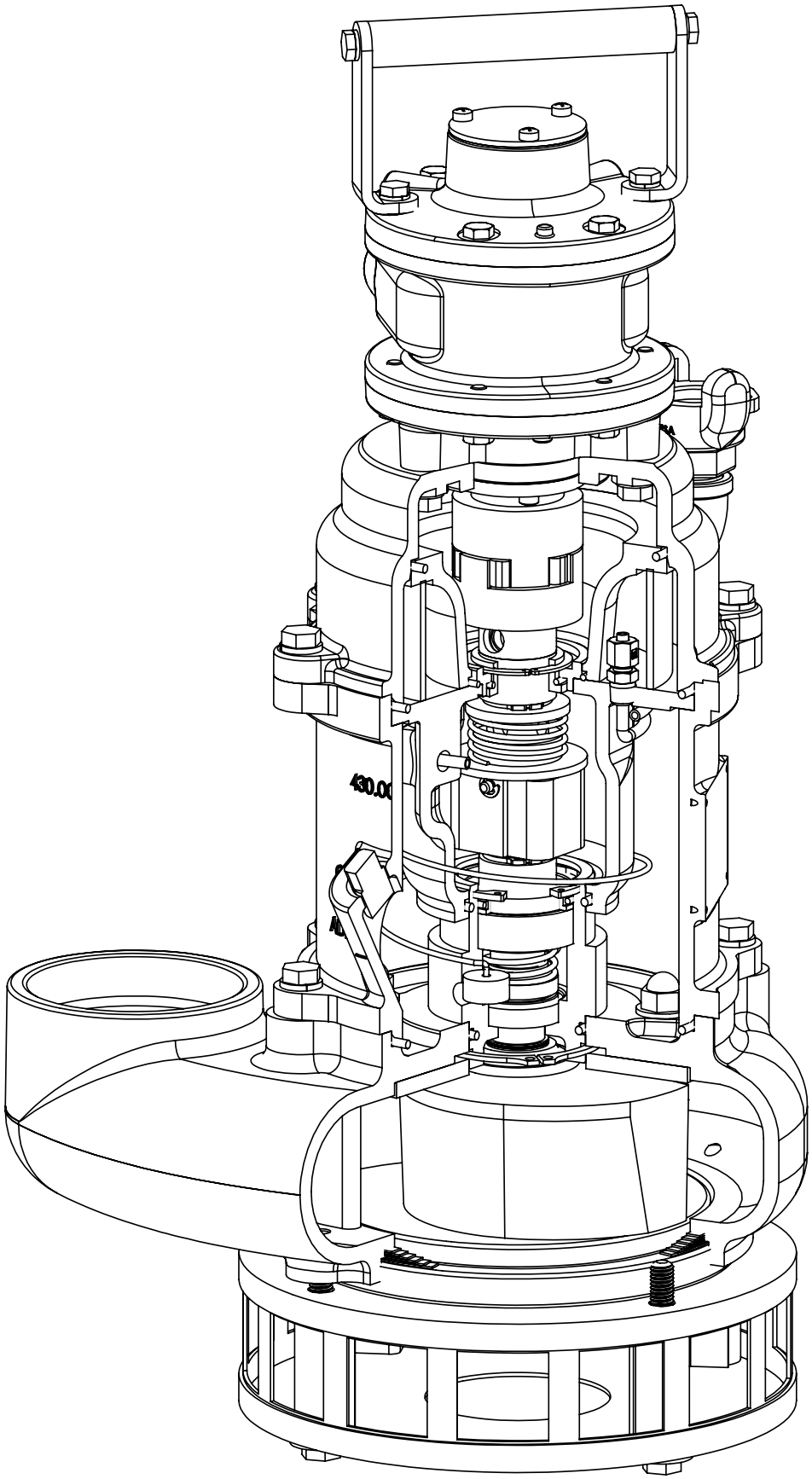

5 - YEAR Limited Product Warranty

Warren Rupp, Inc. ("Warren Rupp") warrants to the original end-use purchaser that no product sold by Warren Rupp that bears a Warren Rupp brand shall fail under normal use and service due to a defect in material or workmanship within five years from the date of shipment from Warren Rupp's factory. Warren Rupp brands include Warren Rupp®,SANDPIPER®, SANDPIPER Signature Series™, MARATHON®, Porta-Pump®, SludgeMaster™ and Tranquilizer®.

The use of non-OEM replacement parts will void (or negate) agency certifications, including CE, ATEX, CSA, 3A and EC1935 compliance (Food Contact Materials). Warren Rupp, Inc. cannot ensure nor warrant non-OEM parts to meet the stringent requirements of the certifying agencies.

~ See complete warranty at https://www.sandpiperpump.com/

SANDPIPER®

EC Declaration of Conformity

Manufacturer:
Warren Rupp, Inc.
800 N. Main Street
Mansfield, Ohio, 44902 USA

Certifies that Air-Operated Double Diaphragm Pump Models: DSB Series, DMF Series, G Series, HDB Series, HDF Series, HP Series, F Series, MS Series, S Series, SL Series, SP Series, SSB Series, T Series, U1F Series, WR Series; High Pressure Pump Models: EH Series, GH Series, SH Series; Submersible Pump Models: SMA3 Series, SPA Series; and Surge Dampener/ Suppressor Models: DA Series, TA Series comply with the European Community Directive 2006/42/EC on Machinery, according to Annex VIII. This product has used Harmonized Standard EN809:2012, Pumps and Pump Units for Liquids - Common Safety Requirements, to verify conformance.

October 3, 2022
DATE/APPROVAL/TITLE:

Technical File on record with:
DEKRA Certification B.V.
Meander 1051
6825 MJ Arnhem
The Netherlands

Signature of authorized person

Dennis Hall
Printed name of authorized person

Engineering Manager
Title

IECEx

CE

EC Declaration of Conformity

Manufacturer:
Warren Rupp, Inc.
800 N. Main Street
Mansfield, Ohio, 44902 USA

Certifies that Air-Operated Double Diaphragm Pump Models: DSB Series, DMF Series, G Series, HDB Series, HDF Series, HP Series, F Series, MS Series, S Series, SL Series, SP Series, SSB Series, T Series, U1F Series, WR Series; High Pressure Pump Models: EH Series, GH Series, SH Series; Submersible Pump Models: SMA3 Series, SPA Series; and Surge Dampener/ Suppressor Models: DA Series, TA Series comply with the United Kingdom Statutory Instruments 2008 No. 1597, The Supply of Machinery (Safety) Regulations 2008, according to Annex VIII. This product has used Designated Standard EN809:2012, Pumps and Pump Units for Liquids - Common Safety Requirements, to verify conformance.

October 17, 2022
DATE/APPROVAL/TITLE:

Technical File on record with:
DEKRA Certification UK Limited
Stokenchurch House
Oxford Road
Stokenchurch
HP14 3SX

Signature of authorized person

Dennis Hall
Printed name of authorized person

Engineering Manager
Title