SERVICE & OPERATING MANUAL

Original Instructions

Certified Quality

SAI GLOBAL
ISO 9001 Certified
ISO 14001 Certified

Model ST1½ & ST40

Containment Duty
Design Level 5

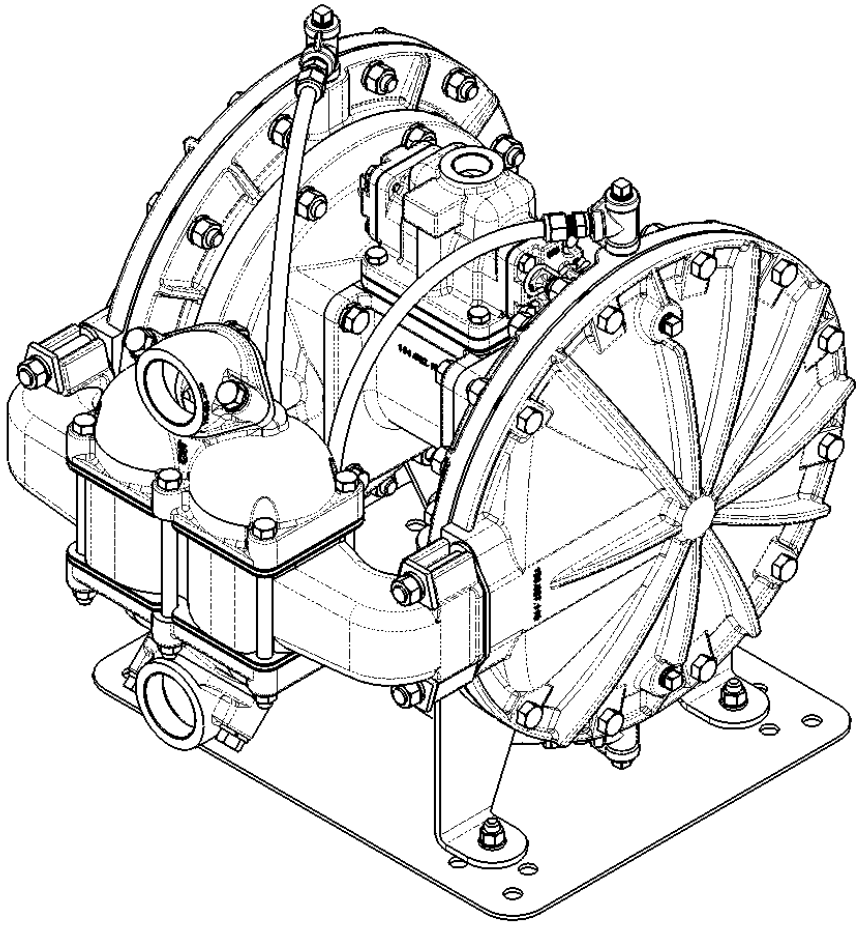

Warren Rupp, Inc.
A Unit of IDEX Corporation
800 N. Main St.,
Mansfield, Ohio 44902 USA
Telephone (419) 524.8388
Fax (419) 522.7867
WWW.SANDPIPERPUMP.COM

©2022 Warren Rupp, Inc.

SANDPIPER®
A WARREN RUPP, INC. BRAND
WWW.SANDPIPERPUMP.COM

Safety Information

⚠ IMPORTANT



Read the safety warnings and instructions in this manual before pump installation and start-up. Failure to comply with the recommendations stated in this manual could damage the pump and void factory warranty.



When the pump is used for materials that tend to settle out or solidify, the pump should be flushed after each use to prevent damage. In freezing temperatures the pump should be completely drained between uses.

⚠ CAUTION



Before pump operation, inspect all fasteners for loosening caused by gasket creep. Retighten loose fasteners to prevent leakage. Follow recommended torques stated in this manual.



Nonmetallic pumps and plastic components are not UV stabilized. Ultraviolet radiation can damage these parts and negatively affect material properties. Do not expose to UV light for extended periods of time.



WARNING
Pump not designed, tested or certified to be powered by compressed natural gas. Powering the pump with natural gas will void the warranty.



WARNING
The use of non-OEM replacement parts will void (or negate) agency certifications, including CE, ATEX, CSA, 3A and EC1935 compliance (Food Contact Materials). Warren Rupp, Inc. cannot ensure nor warrant non-OEM parts to meet the stringent requirements of the certifying agencies.

⚠ WARNING



When used for toxic or aggressive fluids, the pump should always be flushed clean prior to disassembly.



Before maintenance or repair, shut off the compressed air line, bleed the pressure, and disconnect the air line from the pump. Be certain that approved eye protection and protective clothing are worn at all times. Failure to follow these recommendations may result in serious injury or death.



Airborne particles and loud noise hazards. Wear eye and ear protection.



In the event of diaphragm rupture, pumped material may enter the air end of the pump, and be discharged into the atmosphere. If pumping a product that is hazardous or toxic, the air exhaust must be piped to an appropriate area for safe containment.



Take action to prevent static sparking. Fire or explosion can result, especially when handling flammable liquids. The pump, piping, valves, containers and other miscellaneous equipment must be properly grounded.



This pump is pressurized internally with air pressure during operation. Make certain that all fasteners and piping connections are in good condition and are reinstalled properly during reassembly.



Use safe practices when lifting

ATEX Pumps - Conditions For Safe Use

1. Ambient temperature range is as specified in tables 1 to 3 on the next page *(per Annex I of DEKRA 18ATEX0094X)*

2. ATEX compliant pumps are suitable for use in explosive atmospheres when the equipment is properly grounded in accordance with local electrical codes

3. **Non-Metallic ATEX Pumps only — See Explanation of Pump Nomenclature / ATEX Details Page**
   Conductive Polypropylene, conductive Acetal or conductive PVDF pumps are not to be installed in applications where the pumps may be subjected to oil, greases and hydraulic liquids.

4. The optionally provided solenoids shall be protected by a fuse corresponding to its rated current (max 3*Irat according to EN 60127) or by a motor protecting switch with short circuit and thermal instantaneous tripping (set to the rated current) as short circuit protection. For solenoids with a very low rated current, a fuse with the lowest current value according to the indicated standard will be sufficient. The fuse may be accommodated in the associated supply unit or shall be separately arranged. The rated voltage of the fuse shall be equal or greater than the stated rated voltage of the solenoid. The breaking capacity of the fuse shall be as high as or higher than the maximum expected short circuit current at the location of the installation (usually 1500 A). The maximum permissible ripple is 20% for all dc solenoids.
   ***Not applicable for all pump models — See Explanation of Pump Nomenclature / ATEX Details Page**

5. When operating pumps equipped with non-conductive diaphragms that exceed the maximum permissible projected area, as defined in EN ISO 80079-36 : 2016 section 6.7.5 table 8, the following protection methods must be applied
   - Equipment is always used to transfer electrically conductive fluids or
   - Explosive environment is prevented from entering the internal portions of the pump, i.e. dry running.

6. Pumps provided with the pulse output kit and used in the potentially explosive atmosphere caused by the presence of the combustible dust shall be installed in such a way that the pulse output kit is protected against impact
   ***Not applicable for all pump models — See Explanation of Pump Nomenclature / ATEX Details Page**

Temperature Tables

Table 1. Category 1 & Category 2 ATEX Rated Pumps

Ambient Temperature Range [°C]	Process Temperature Range [°C][1]	Temperature Class	Maximum Surface Temperature [°C]
-20°C to +60°C	-20°C to +80°C	T5	T100°C
	-20°C to +108°C	T4	T135°C
	-20°C to + 160°C	T3	T200°C
	-20°C to +177°C	(225°C) T2	

[1]Per CSA standards ANSI LC6-2018 US & Canadian Technical Letter R14, G-Series Natural Gas Models are restricted to (-20°C to + 80°C) process temperature

Table 2. Category 2 ATEX Rated Pumps Equipped with Pulse Output Kit or Integral Solenoid:

Ambient Temperature Range [°C]	Process Temperature Range [°C]	Temperature Class	Maximum Surface Temperature [°C]	Options	
				Pulse Output Kit	Integral Solenoid
-20°C to +60°C	-20°C to +100°C	T5	T100	X	
-20°C to +50°C	-20°C to +100°C	T5	T100		X

[2]ATEX Pulse output or Intergral Solenoid Not Available For All Pump Models See Explanation of Pump Nomenclature / ATEX Details Page

Table 3. Category M1 ATEX Rated Pumps for Mining

Ambient Temperature Range [°C]	Process Temperature Range [°C]
-20°C to +60°C	-20°C to +150°C

Note: The ambient temperature range and the process temperature range should not exceed the operating temperature range of the applied non-metallic parts as listed in the manuals of the pumps.

Table of Contents

SECTION 1: PUMP SPECIFICATIONS.....1
- Explanation of Nomenclature
- Performance
- Materials
- Dimensional Drawings

SECTION 2: INSTALLATION & OPERATION ...4
- Principle of Pump Operation
- Recommended Installation Guide
- Filling the Driver Chambers with Fluid
- Troubleshooting Guide

SECTION 3: EXPLODED VIEW.....8
- Composite Repair Parts Drawing
- Composite Repair Parts List
- Material Codes

SECTION 4: AIR END 11
- Air Valve with Stroke Indicator Assembly
- Pilot Valve Assembly

SECTION 5: WARRANTY & CERTIFICATES ..13
- Warranty
- CE Declaration of Conformity - Machinery
- ATEX Declaration of Conformity

Explanation of Pump Nomenclature

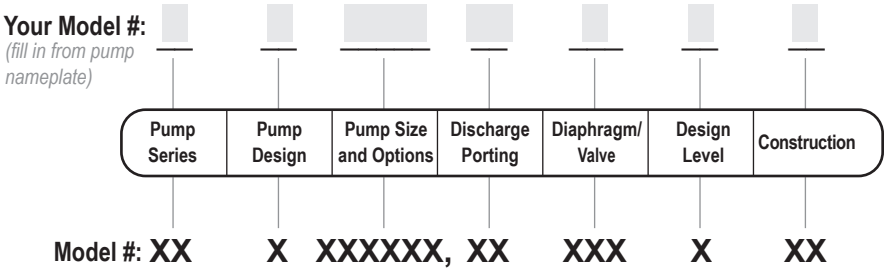

Pump Series
S SANDPIPER®

Pump Design
T Spill Containment

Pump Size & Options
15 NPT
40 1½" BSP Tapered

Options
VL Visual Leak Detection Sight Tubes

Discharge Porting Position
S Side

Diaphragm Check Valve Materials
GI EPDM Driver Diaphragms, PTFE Pumping Diaphragms, and PTFE Check Balls
GN Neoprene Driver Diaphragms, PTFE Pumping Diaphragms, and PTFE Check Balls
GV FKM Driver Diaphragms, PTFE Pumping Diaphragms, and PTFE Check Balls

Design Level
5

Construction
A Aluminum Wetted, Aluminum Air
CI Cast Iron Wetted, Aluminum Air
II Cast Iron Wetted, Cast Iron Air
SI Stainless Steel Wetted, Cast Iron Air
SS Stainless Steel Wetted, Aluminum Air

ATEX Detail

All Pump Models:

	ATEX Details	Options:VL
	II 2 G Ex h IIC T5...225°C (T2) Gb II 2 D Ex h IIIC T100°C...T200°C Db	No
	II 2 G Ex h IIB T5...225°C (T2) Gb II 2 D Ex h IIIB T100°C...T200°C Db	Yes

Performance

ST1½ & ST40

SUCTION/DISCHARGE PORT SIZE
- ST1½: 1½ (37.5mm) NPT (F)
- ST40: 1½ (37.5MM) BSP (F)(Tapered)

CAPACITY
- 0 to 106 gallons per minute (0 to 400 liters per minute)

AIR DISTRIBUTION VALVE
- No-lube, no-stall design

SOLIDS-HANDLING
- Occasional solids only. Up to ¼ in. (6.3mm)

HEADS UP TO
- 125 psi or 289 ft. of water (8.8 Kg/cm² or 88 meters)

MAXIMUM OPERATING PRESSURE
- 125 psi (8.6 bar)

DISPLACEMENT/STROKE
- .37 Gallon / 1.29 liter

SHIPPING WEIGHT
- Aluminum 99 lbs. (46kg)
- Cast Iron 146 lbs. (66kg)
- Stainless Steel 212 lbs. (95kg)

MODEL ST1½/ST40 Performance Curve

Performance based on the following: PTFE fitted pump, flooded suction, water at ambient conditions. The use of other materials and varying hydraulic conditions may result in deviations in excess of 5%.

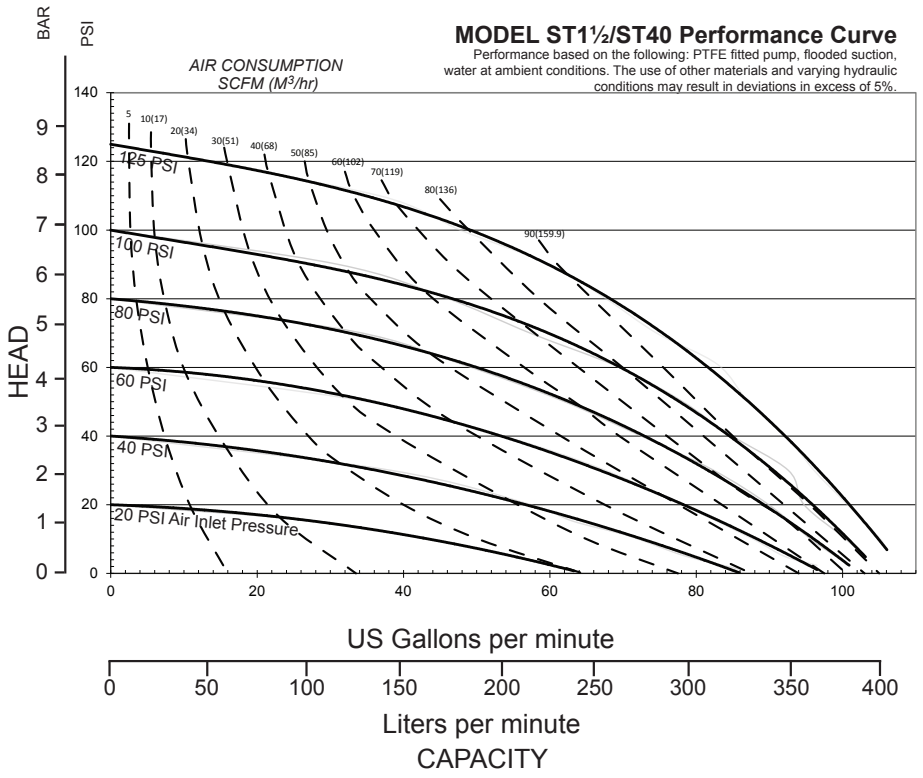

Materials

Material Profile:	Operating Temperatures:	
⚠ *CAUTION! Operating temperature limitations are as follows:*	Max.	Min.
Conductive Acetal: Tough, impact resistant, ductile. Good abrasion resistance and low friction surface. Generally inert, with good chemical resistance except for strong acids and oxidizing agents.	190°F 88°C	-20°F -29°C
EPDM: Shows very good water and chemical resistance. Has poor resistance to oils and solvents, but is fair in ketones and alcohols.	280°F 138°C	-40°F -40°C
FKM: (Fluorocarbon) Shows good resistance to a wide range of oils and solvents; especially all aliphatic, aromatic and halogenated hydrocarbons, acids, animal and vegetable oils. Hot water or hot aqueous solutions (over 70°F(21°C)) will attack FKM.	350°F 177°C	-40°F -40°C
Hytrel®: Good on acids, bases, amines and glycols at room temperatures only.	220°F 104°C	-20°F -29°C
Neoprene: All purpose. Resistance to vegetable oils. Generally not affected by moderate chemicals, fats, greases and many oils and solvents. Generally attacked by strong oxidizing acids, ketones, esters and nitro hydrocarbons and chlorinated aromatic hydrocarbons.	200°F 93°C	-10°F -23°C
Nitrile: General purpose, oil-resistant. Shows good solvent, oil, water and hydraulic fluid resistance. Should not be used with highly polar solvents like acetone and MEK, ozone, chlorinated hydrocarbons and nitro hydrocarbons.	190°F 88°C	-10°F -23°C
Nylon: 6/6 High strength and toughness over a wide temperature range. Moderate to good resistance to fuels, oils and chemicals.	180°F 82°C	32°F 0°C
Polypropylene: A thermoplastic polymer. Moderate tensile and flex strength. Resists stong acids and alkali. Attacked by chlorine, fuming nitric acid and other strong oxidizing agents.	180°F 82°C	32°F 0°C
PVDF: (Polyvinylidene Fluoride) A durable fluoroplastic with excellent chemical resistance. Excellent for UV applications. High tensile strength and impact resistance.	250°F 121°C	0°F -18°C
Santoprene®: Injection molded thermoplastic elastomer with no fabric layer. Long mechanical flex life. Excellent abrasion resistance.	275°F 135°C	-40°F -40°C
UHMW PE: A thermoplastic that is highly resistant to a broad range of chemicals. Exhibits outstanding abrasion and impact resistance, along with environmental stress-cracking resistance.	180°F 82°C	-35°F -37°C
Urethane: Shows good resistance to abrasives. Has poor resistance to most solvents and oils.	150°F 66°C	32°F 0°C
Virgin PTFE: (PFA/TFE) Chemically inert, virtually impervious. Very few chemicals are known to chemically react with PTFE; molten alkali metals, turbulent liquid or gaseous fluorine and a few fluoro-chemicals such as chlorine trifluoride or oxygen difluoride which readily liberate free fluorine at elevated temperatures.	220°F 104°C	-35°F -37°C

Maximum and Minimum Temperatures are the limits for which these materials can be operated. Temperatures coupled with pressure affect the longevity of diaphragm pump components. Maximum life should not be expected at the extreme limits of the temperature ranges.

Metals:

Alloy C: Equal to ASTM494 CW-12M-1 specification for nickel and nickel alloy.

Stainless Steel: Equal to or exceeding ASTM specification A743 CF-8M for corrosion resistant iron chromium, iron chromium nickel and nickel based alloy castings for general applications. Commonly referred to as 316 Stainless Steel in the pump industry.

For specific applications, always consult the Chemical Resistance Chart.

Dimensional Drawings

ST1½ & ST40

Dimensions are ±1/8". Figures in parentheses = millimeters.

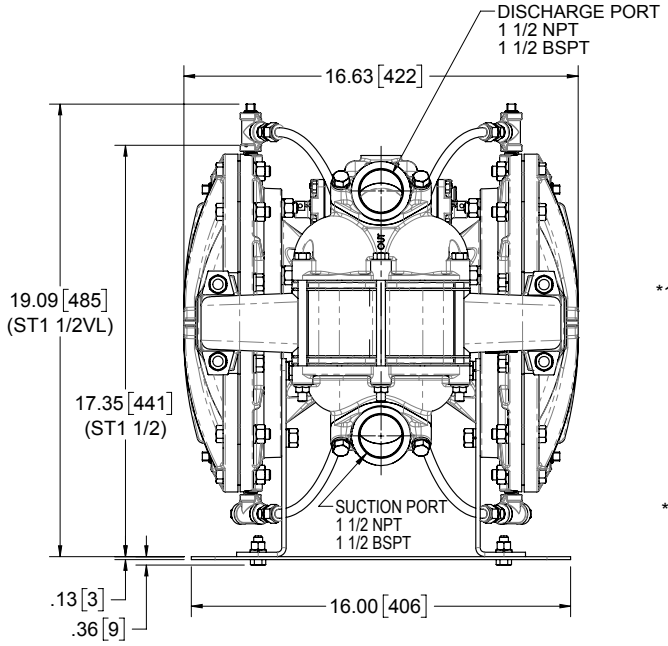

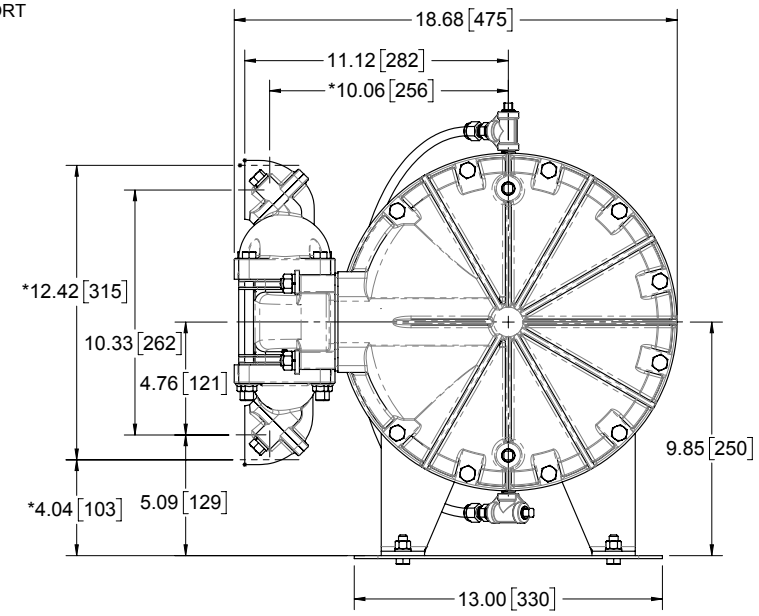

* INDICATES DIMENSION WITH SUCTION AND DISCHARGE PORTS ROTATED 180° TO A VERTICAL POSITION

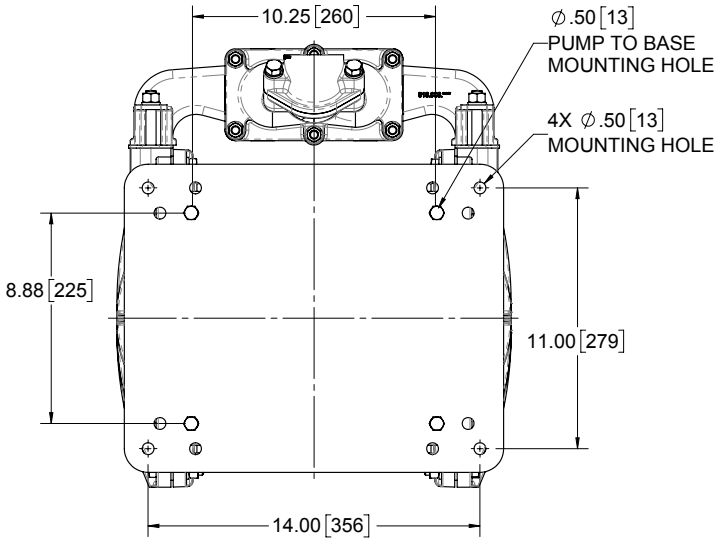

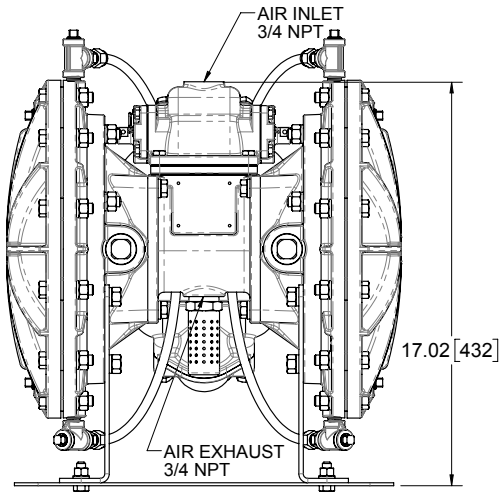

Principle of Pump Operation

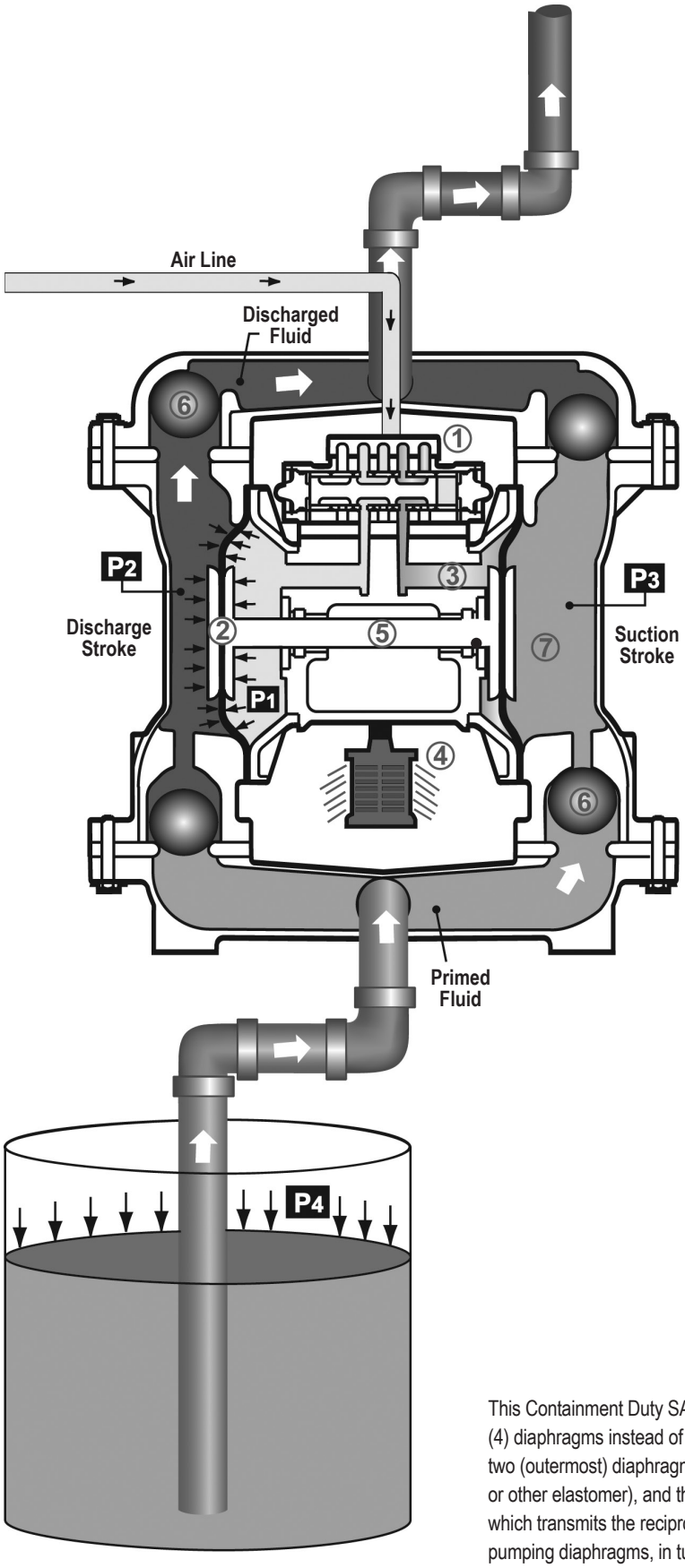

Air-Operated Double Diaphragm (AODD) pumps are powered by compressed air or nitrogen.

The main directional (air) control valve ① distributes compressed air to an air chamber, exerting uniform pressure over the inner surface of the diaphragm ②. At the same time, the exhausting air ③ from behind the opposite diaphragm is directed through the air valve assembly(s) to an exhaust port ④.

As inner chamber pressure **(P1)** exceeds liquid chamber pressure **(P2)**, the rod ⑤ connected diaphragms shift together creating discharge on one side and suction on the opposite side. The discharged and primed liquid's directions are controlled by the check valves (ball or flap)⑥ orientation.

The pump primes as a result of the suction stroke. The suction stroke lowers the chamber pressure **(P3)** increasing the chamber volume. This results in a pressure differential necessary for atmospheric pressure **(P4)** to push the fluid through the suction piping and across the suction side check valve and into the outer fluid chamber ⑦.

Suction (side) stroking also initiates the reciprocating (shifting, stroking or cycling) action of the pump. The suction diaphragm's movement is mechanically pulled through its stroke. The diaphragm's inner plate makes contact with an actuator plunger aligned to shift the pilot signaling valve. Once actuated, the pilot valve sends a pressure signal to the opposite end of the main directional air valve, redirecting the compressed air to the opposite inner chamber.

SUBMERGED ILLUSTRATION

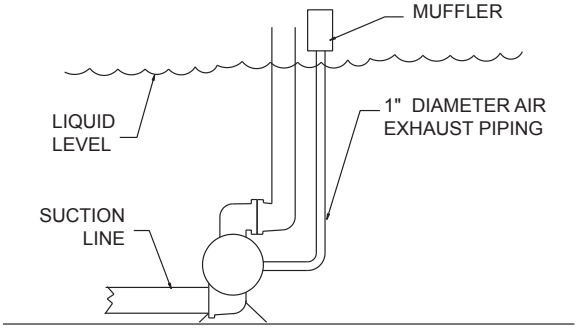

Pump can be submerged if the pump materials of construction are compatible with the liquid being pumped. The air exhaust must be piped above the liquid level. When the pumped product source is at a higher level than the pump (flooded suction condition), pipe the exhaust higher than the product source to prevent siphoning spills.

This Containment Duty SANDPIPER unit differs from other SANDPIPER units only in that it utilizes four (4) diaphragms instead of two (2). Two rod-connected diaphragms are the driver diaphragms. The other two (outermost) diaphragms are the actual pumping diaphragms. Each driver diaphragm (of neoprene or other elastomer), and the pumping diaphragm (of PTFE), are separated by a chamber filled with liquid which transmits the reciprocating motion of the driver diaphragm to the pumping diaphragm. The PTFE pumping diaphragms, in turn, create the alternating suction and discharge action in the outer diaphragm chambers, and are the only diaphragms in contact with liquid being pumped.

Recommended Installation Guide

Available Accessories:

1. Surge Suppressor
2. Filter/Regulator
3. Air Dryer
4. Lubricator

Note: Surge Suppressor and Piping, including air line, must be supported after the flexible connections.

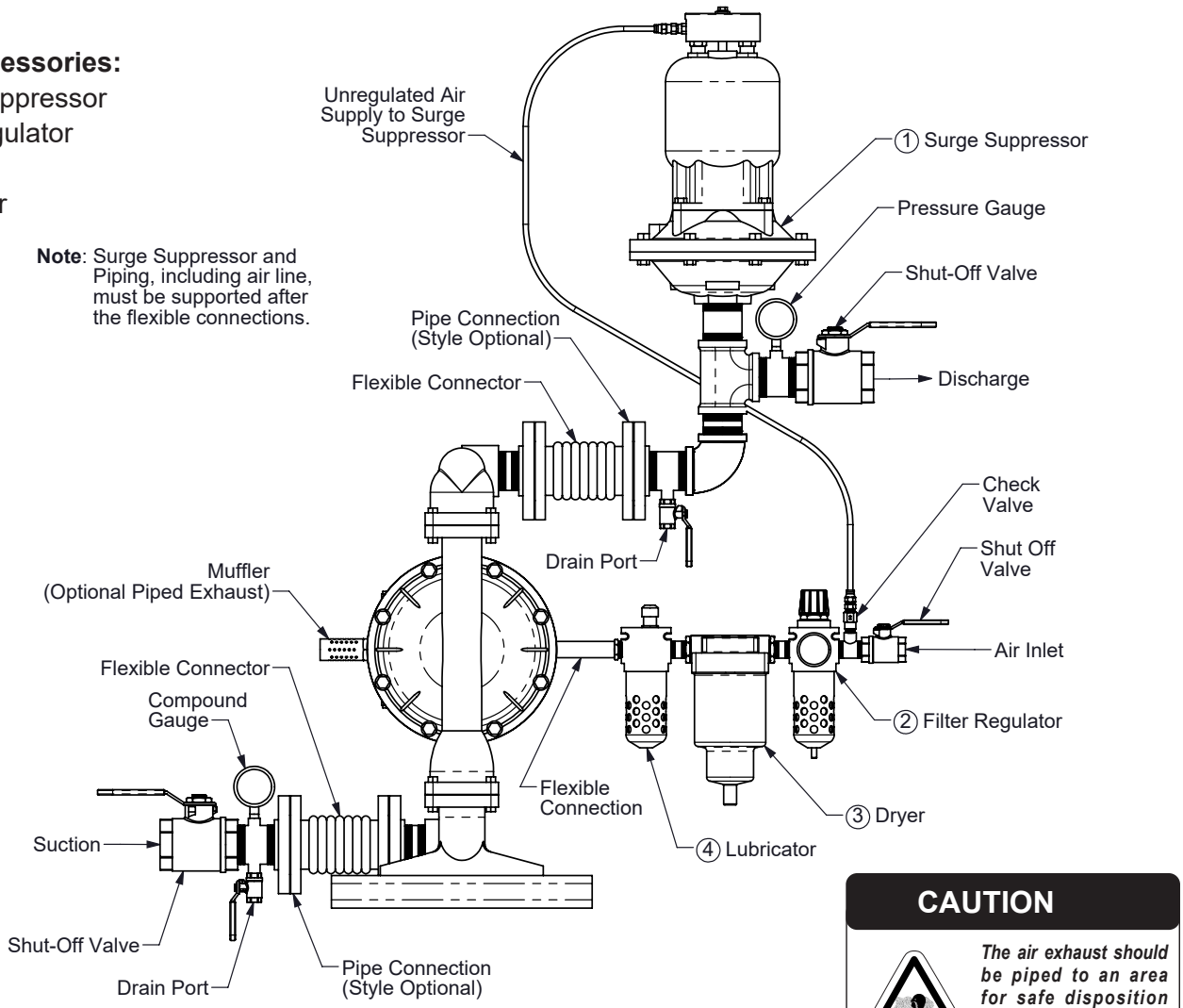

CAUTION

The air exhaust should be piped to an area for safe disposition of the product being pumped, in the event of a diaphragm failure.

Installation And Start-Up

Locate the pump as close to the product being pumped as possible. Keep the suction line length and number of fittings to a minimum. Do not reduce the suction line diameter.

Air Supply

Connect the pump air inlet to an air supply with sufficient capacity and pressure to achieve desired performance. A pressure regulating valve should be installed to insure air supply pressure does not exceed recommended limits.

Air Valve Lubrication

The air distribution system is designed to operate WITHOUT lubrication. This is the standard mode of operation. If lubrication is desired, install an air line lubricator set to deliver one drop of SAE 10 non-detergent oil for every 20 SCFM (9.4 liters/sec.) of air the pump consumes. Consult the Performance Curve to determine air consumption.

Air Line Moisture

Water in the compressed air supply may cause icing or freezing of the exhaust air, causing the pump to cycle erratically or stop operating. Water in the air supply can be reduced by using a point-of-use air dryer.

Air Inlet And Priming

To start the pump, slightly open the air shut-off valve. After the pump primes, the air valve can be opened to increase air flow as desired. If opening the valve increases cycling rate, but does not increase the rate of flow, cavitation has occurred. The valve should be closed slightly to obtain the most efficient air flow to pump flow ratio.

Filling the Driver Chambers with Liquid

THE DRIVER CHAMBERS WILL BE FILLED WITH DISTILLED WATER AT THE FACTORY. IF THE INNER CHAMBER IS CAST IRON, THE UNIT IS FILLED WITH ETHYLENE GLYCOL.

If you prefer to substitute another liquid, to prevent system contamination consult the factory first to determine compatibility of the substitute with pump construction.

Follow the steps listed below to replace the liquid in the pump after disassembly or liquid loss:

Step 1. Disconnect air supply from pump before starting any work. Remove the fill and drain plugs (¼ NPT) (.0635 cm) from the driver chambers. After the chambers are completely drained of all liquid, replace the drain plugs and tighten them securely. **NOTE:** Use thread sealant on plug threads.

Step 2. Remove the two large (1 NPT) (2.54 cm) pipe plugs (one on each side) located in the rear of the innermost air chambers.

Step 3. Determine which side of the pump is on the discharge stroke and which side is on the suction stroke by checking the positions of the diaphragm assemblies. The cast inner diaphragm plate closest to the pump intermediate housing, or centerline, is the chamber in the suction stroke position. The opposite chamber, with cast inner diaphragm plate away from unit centerline, is in the discharge stroke position. **NOTE:** The diaphragm assemblies (cast inner diaphragm plates) are visible through the two tapped holes in the inner chambers from which the two large pipe plugs were removed.

Step 4. **For pumps with air valve assemblies 031.098.010 or 031.098.156**

Insert the safety clip (210-008-330) on one side of the main air valve body and cycle the pump at 5 to 10 psi. As you face the pump, the side with the pin should be the first driver fluid reservoir to be filled. The driver diaphragm will be on a suction stroke. Pour the correct amount of liquid into the reservoir. The fluid level will not come completely to the top. Loosely install the pipe plug, with pipe dope, PTFE tape or o-ring (depending on pump model) placed on the threads. Release all air pressure to the pump and remove the safety clip. The diaphragm will relax and will come to center. Watch the loose pipe plug closely as air escapes and the driver fluid level rises. Insert the safety clip on the opposite side and add a small amount of air pressure. When you see liquid weeping out between the loose pipe plug and fill hole, tighten the pipe plug. Repeat the procedure for the unfilled chamber.

If you have a problem getting the driver fluid to come to the top, a blunt instrument can be inserted into the chamber port of the pump and pressure can manually be applied to the pumping diaphragm to cause the liquid to come to the top. Do this carefully. A needle valve for precision stroking control is recommended at the air inlet for this procedure. Please be aware that air left in the chambers will result in faulty operation of the pump and will cause premature pumping diaphragm failure.

For pumps not equipped with Visual Leak Detection sight tubes, fill with 1200ml/ 40.6 fl. oz.

For pumps equipped with Visual Leak Detection sight tubes, fill with 1250ml/ 42.3 fl. oz.

Use pipe sealant on pipe plugs. Cast iron fluid chambers typically filled with normal antifreeze.

Step 5. After filling, the liquid will not come all the way to the top of the filling hole. Use a screwdriver or similar tool to apply leverage on the inner diaphragm plate (diaphragm assembly) forcing the driver diaphragm on the side you have just filled partially through its discharge stroke until the liquid level in the chamber you are filling comes to the top of the fill hole. This displaces any air in the chamber. **CAUTION:** Do not pry on or damage the elastomer diaphragm while performing this step of the filling instructions.

Step 6. Re-plug the fill hole and tighten securely. **NOTE:** Use thread sealant on plug threads and tighten only until snug.

Step 7. Using a screwdriver or similar tool apply leverage on the inner diaphragm plate (diaphragm assembly), on the side just filled, forcing the pump to "shift" or reverse diaphragm positions.

Step 8. Follow steps (4) thru (6) to fill the opposite driver chamber.

Step 9. Re-install the two large pipe plugs in the rear of the pump inner air chambers. **NOTE:** Use thread sealant on plug threads.

Troubleshooting Guide

Symptom:	Potential Cause(s):	Recommendation(s):
Pump Cycles Once	Deadhead (system pressure meets or exceeds air supply pressure).	Increase the inlet air pressure to the pump. Pump is designed for 1:1 pressure ratio at zero flow. (Does not apply to high pressure 2:1 units).
	Air valve or intermediate gaskets installed incorrectly.	Install gaskets with holes properly aligned.
	Bent or missing actuator plunger.	Remove pilot valve and inspect actuator plungers.
Pump Will Not Operate / Cycle	Pump is over lubricated.	Set lubricator on lowest possible setting or remove. Units are designed for lube free operation.
	Lack of air (line size, PSI, CFM).	Check the air line size and length, compressor capacity (HP vs. cfm required).
	Check air distribution system.	Disassemble and inspect main air distribution valve, pilot valve and pilot valve actuators.
	Discharge line is blocked or clogged manifolds.	Check for inadvertently closed discharge line valves. Clean discharge manifolds/piping.
	Deadhead (system pressure meets or exceeds air supply pressure).	Increase the inlet air pressure to the pump. Pump is designed for 1:1 pressure ratio at zero flow. (Does not apply to high pressure 2:1 units).
	Blocked air exhaust muffler.	Remove muffler screen, clean or de-ice, and re-install.
	Pumped fluid in air exhaust muffler.	Disassemble pump chambers. Inspect for diaphragm rupture or loose diaphragm plate assembly.
	Pump chamber is blocked.	Disassemble and inspect wetted chambers. Remove or flush any obstructions.
Pump Cycles and Will Not Prime or No Flow	Cavitation on suction side.	Check suction condition (move pump closer to product).
	Check valve obstructed. Valve ball(s) not seating properly or sticking.	Disassemble the wet end of the pump and manually dislodge obstruction in the check valve pocket. Clean out around valve ball cage and valve seat area. Replace valve ball or valve seat if damaged. Use heavier valve ball material.
	Valve ball(s) missing (pushed into chamber or manifold).	Worn valve ball or valve seat. Worn fingers in valve ball cage (replace part). Check Chemical Resistance Guide for compatibility.
	Valve ball(s) / seat(s) damaged or attacked by product.	Check Chemical Resistance Guide for compatibility.
	Check valve and/or seat is worn or needs adjusting.	Inspect check valves and seats for wear and proper setting. Replace if necessary.
	Suction line is blocked.	Remove or flush obstruction. Check and clear all suction screens or strainers.
	Excessive suction lift.	For lifts exceeding 20' of liquid, filling the chambers with liquid will prime the pump in most cases.
	Suction side air leakage or air in product.	Visually inspect all suction-side gaskets and pipe connections.
	Pumped fluid in air exhaust muffler.	Disassemble pump chambers. Inspect for diaphragm rupture or loose diaphragm plate assembly.
Pump Cycles Running Sluggish / Stalling, Flow Unsatisfactory	Over lubrication.	Set lubricator on lowest possible setting or remove. Units are designed for lube free operation.
	Icing.	Remove muffler screen, de-ice, and re-install. Install a point of use air drier.
	Clogged manifolds.	Clean manifolds to allow proper air flow.
	Deadhead (system pressure meets or exceeds air supply pressure).	Increase the inlet air pressure to the pump. Pump is designed for 1:1 pressure ratio at zero flow. (Does not apply to high pressure 2:1 units).
	Cavitation on suction side.	Check suction (move pump closer to product).
	Lack of air (line size, PSI, CFM).	Check the air line size, length, compressor capacity.
	Excessive suction lift.	For lifts exceeding 20' of liquid, filling the chambers with liquid will prime the pump in most cases.
	Air supply pressure or volume exceeds system hd.	Decrease inlet air (press. and vol.) to the pump. Pump is cavitating the fluid by fast cycling.
	Undersized suction line.	Meet or exceed pump connections.
	Restrictive or undersized air line.	Install a larger air line and connection.
	Suction side air leakage or air in product.	Visually inspect all suction-side gaskets and pipe connections.
	Suction line is blocked.	Remove or flush obstruction. Check and clear all suction screens or strainers.
	Pumped fluid in air exhaust muffler.	Disassemble pump chambers. Inspect for diaphragm rupture or loose diaphragm plate assembly.
	Check valve obstructed.	Disassemble the wet end of the pump and manually dislodge obstruction in the check valve pocket.
	Check valve and/or seat is worn or needs adjusting.	Inspect check valves and seats for wear and proper setting. Replace if necessary.
	Entrained air or vapor lock in chamber(s).	Purge chambers through tapped chamber vent plugs. Purging the chambers of air can be dangerous.
Product Leaking Through Exhaust	Diaphragm failure, or diaphragm plates loose.	Replace diaphragms, check for damage and ensure diaphragm plates are tight.
	Diaphragm stretched around center hole or bolt holes.	Check for excessive inlet pressure or air pressure. Consult Chemical Resistance Chart for compatibility with products, cleaners, temperature limitations and lubrication.
Premature Diaphragm Failure	Cavitation.	Enlarge pipe diameter on suction side of pump.
	Excessive flooded suction pressure.	Move pump closer to product. Raise pump/place pump on top of tank to reduce inlet pressure. Install Back pressure device (Tech bulletin 41r). Add accumulation tank or pulsation dampener.
	Misapplication (chemical/physical incompatibility).	Consult Chemical Resistance Chart for compatibility with products, cleaners, temperature limitations and lubrication.
	Incorrect diaphragm plates or plates on backwards, installed incorrectly or worn.	Check Operating Manual to check for correct part and installation. Ensure outer plates have not been worn to a sharp edge.
Unbalanced Cycling	Excessive suction lift.	For lifts exceeding 20' of liquid, filling the chambers with liquid will prime the pump in most cases.
	Undersized suction line.	Meet or exceed pump connections.
	Pumped fluid in air exhaust muffler.	Disassemble pump chambers. Inspect for diaphragm rupture or loose diaphragm plate assembly.
	Suction side air leakage or air in product.	Visually inspect all suction-side gaskets and pipe connections.
	Check valve obstructed.	Disassemble the wet end of the pump and manually dislodge obstruction in the check valve pocket.
	Check valve and/or seat is worn or needs adjusting.	Inspect check valves and seats for wear and proper setting. Replace if necessary.
	Entrained air or vapor lock in chamber(s).	Purge chambers through tapped chamber vent plugs.

For additional troubleshooting tips contact After Sales Support at service.warrenrupp@idexcorp.com or 419-524-8388

Composite Repair Parts Drawing

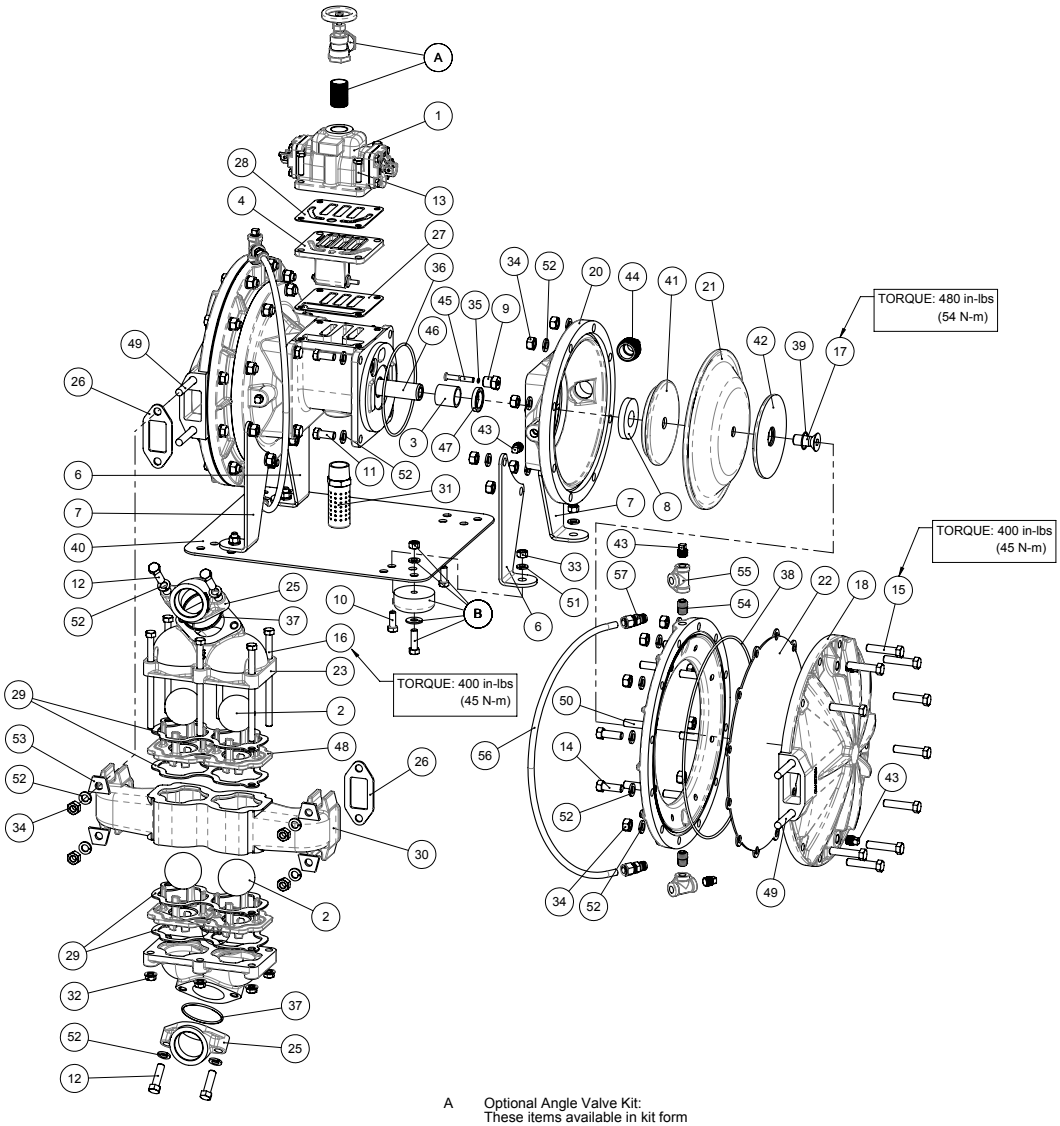

A Optional Angle Valve Kit:
These items available in kit form only Order PN: 475.102.000.

B Optional Rubber Foot Kit:
These items available in kit form only Order PN: 475.101.000.

Service & Repair Kits

476.370.000 **AIR END KIT**
Sleeve and Spool Set, Seals, Gaskets, O-rings, Bumpers, Plunger Actuator, Plunger Bushings, and Pilot Valve Assembly

476.314.000 **AIR END WEAR KIT**
Seals, O-rings, Gaskets, Grease Packet Bumpers, Plunger Actuators, Plunger Bushings

476.371.634 **WET END KIT**
EPDM Driver Diaphragms, PTFE Pumping Diaphragms, PTFE Check Balls, PTFE Gasets, EDPM O-rings, and FEP Encapsulated Silicone O-rings

476.371.635 **WET END KIT**
Neoprene Driver Diaphragms, PTFE Pumping Diaphragms, PTFE Check Balls, PTFE Gaskets, Nitrile O-rings, and FEP Encapsulated Silicone O-rings

476.371.637 **WET END KIT**
FKM Driver Diaphragms, PTFE Pumping Diaphragms, PTFE Check Balls, PTFE Gaskets, FKM O-rings, and FEP Encapsulated Silicone O-rings

Conversion Kit Type 4 to Type 5

475.302.379 Check Valve Seat & Conductive Neoprene Seat Gaskets, and Fasteners

475.302.384 Check Valve Seat & Conductive Buna Seat Gaskets, and Fasteners

475.302.608 Check Valve Seat & Conductive PTFE Seat Gaskets, and Fasteners

Composite Repair Parts List

Item	Part Number	Description	Qty.
(1*)	031.215.010	ASSEMBLY, MAIN AIR VALVE (See Pg 11)	1
	031.215.156	ASSEMBLY, MAIN AIR VALVE (See Pg 11)	1
[2]	050.010.600	BALL, CHECK	4
3	070.006.170	BEARING	2
(4)	095.073.001	PILOT VALVE ASSEMBLY	1
5	114.002.010	BRACKET, INTERMEDIATE	1
	114.002.156	BRACKET, INTERMEDIATE	1
6	115.062.080	BRACKET, MOUNTING FOOT, LEFT	2
7	115.063.080	BRACKET, MOUNTING FOOT, RIGHT	2
8	132.002.360	BUMPER, DIAPHRAGM	2
(9)	135.016.162	BUSHING, THREADED	2
10	170.006.110	CAPSCREW, HEX HD, 5/16-18 X 7/8	4
11	170.024.115	CAPSCREW, HEX HD, 7/16-14 X 1	8
12	170.035.115	CAPSCREW, HEX HD, 7/16-14 X 1.50	4
13	170.045.115	CAPSCREW, HEX HEAD 5/16-18 X 1 1/4	4
14	170.058.115	CAPSCREW, HEX HD, 7/16-14 X 1.25	4
15	170.060.115	CAPSCREW, HEX HD, 7/16-14 X 2.00	20
16	170.131.115	CAPSCREW, HEX HD, 3/8-16 X 6	6
17	171.002.110	CAPSCREW, SOC HD, 5/8-11 X 1.50	2
18	196.027.110	CHAMBER, OUTER	2
	196.027.156	CHAMBER, OUTER	2
	196.027.010	CHAMBER, OUTER	2
19	196.028.010	CHAMBER, SPILL CONTAINMENT	2
	196.028.110	CHAMBER, SPILL CONTAINMENT	2
	196.028.156	CHAMBER, SPILL CONTAINMENT	2
20	196.029.010	CHAMBER, INNER	2
	196.029.156	CHAMBER, INNER	2
[21]	286.005.354	DIAPHRAGM	2
	286.005.363	DIAPHRAGM	2
	286.005.364	DIAPHRAGM	2
	286.005.365	DIAPHRAGM	2
[22]	286.017.604	DIAPHRAGM, PUMPING	2
23	334.006.110	FLANGE, DISCHARGE	1
	334.006.156	FLANGE, DISCHARGE	1
	334.006.010	FLANGE, DISCHARGE	1
24	334.007.110	FLANGE, SUCTION	1
	334.007.156	FLANGE, SUCTION	1
	334.007.010	FLANGE, SUCTION	1
25	334.008.110	FLANGE, PORTING	2
	334.008.156	FLANGE, PORTING	2
	334.008.010	FLANGE, PORTING	2
	334.008.110 E	FLANGE, PORTING, BSP TAPERED	2
	334.008.156 E	FLANGE, PORTING, BSP TAPERED	2
	334.008.010 E	FLANGE, PORTING, BSP TAPERED	2
[26]	360.022.600	GASKET, MANIFOLD	2
(27)	360.041.379	GASKET	1
(28)	360.048.425	GASKET	1
[29]	360.116.608	GASKET, MANIFOLD/SEAT	4
30	518.003.110	MANIFOLD	1
	518.003.156	MANIFOLD	1
	518.003.010	MANIFOLD	1
31	530.033.000	MUFFLER	1
32	544.002.115	NUT, HEX FLANGED, 3/8-16	6
33	545.005.110	NUT, HEX, 5/16-18	4
34	545.007.115	NUT, HEX - 7/16-14	40
(35)	560.001.360	O-RING	2
(36)	560.022.360	O-RING	2
[37]	560.028.610	O-RING	2
[38]	560.043.360	O-RING	2
	560.043.363	O-RING	2
	560.043.364	O-RING	2
39	560.070.610	O-RING	2
40	612.007.150	PLATE, BASE	1
41	612.052.157	PLATE, INNER DIAPHRAGM	2
	612.052.010	PLATE, INNER DIAPHRAGM	2
42	612.096.110	PLATE, OUTER DIAPHRAGM	2
43	618.003.110	PLUG, PIPE, 1/4	6
	618.003.112	PLUG, PIPE, 1/4	4
44	618.007.115	PLUG, PIPE, 1" NPT	2
(45)	620.011.114	PLUNGER, ACTUATOR	2
46	685.007.120	BUMPER, DIAPHRAGM	1
(47)	720.004.360	SEAL, U-CUP	2
48	722.105.110	SEAT, CHECK VALVE - SUCTION	2
49	807.017.115	7/16-14 X 3 STUD	4
50	807.033.115	STUD, 7/16-14 X 2.00	16
51	900.005.110	WASHER, LOCK, 3/8	5
52	900.006.115	WASHER, LOCK, 7/16	56
53	905.001.306	WASHER, TAPERED	4
Items Included on ST1 1/2VL only			
54	538.083.110	NIPPLE, PIPE, 1/4" NPT, CLOSE	4
55	835.005.110	TEE, PIPE, 1/4 NPT	4
56	860.064.606	TUBE	2
57	866.060.110	CONNECTOR, TUBE	4
Not Shown:			
	242-001-000	Fill Bottle	

LEGEND:

◯ = Items contained within Air End Kits

□ = Items contianed within Wet End Kits

* Air End Kit includes sleeve and spool set, not entire air valve assembly

Note: *Kits contain components specific to the material codes.*

Material Codes - The Last 3 Digits of Part Number

000.....Assembly, sub-assembly; and some purchased items
010.....Cast Iron
015.....Ductile Iron
020.....Ferritic Malleable Iron
080.....Carbon Steel, AISI B-1112
110.....Alloy Type 316 Stainless Steel
111.....Alloy Type 316 Stainless Steel (Electro Polished)
112.....Alloy C
113.....Alloy Type 316 Stainless Steel (Hand Polished)
114.....303 Stainless Steel
115.....302/304 Stainless Steel
117.....440-C Stainless Steel (Martensitic)
120.....416 Stainless Steel (Wrought Martensitic)
148.....Hardcoat Anodized Aluminum
150.....6061-T6 Aluminum
152.....2024-T4 Aluminum (2023-T351)
155.....356-T6 Aluminum
156.....356-T6 Aluminum
157.....Die Cast Aluminum Alloy #380
158.....Aluminum Alloy SR-319
162.....Brass, Yellow, Screw Machine Stock
165.....Cast Bronze, 85-5-5-5
166.....Bronze, SAE 660
170.....Bronze, Bearing Type, Oil Impregnated
180.....Copper Alloy
305.....Carbon Steel, Black Epoxy Coated
306.....Carbon Steel, Black PTFE Coated
307.....Aluminum, Black Epoxy Coated
308.....Stainless Steel, Black PTFE Coated
309.....Aluminum, Black PTFE Coated
313.....Aluminum, White Epoxy Coated
330.....Zinc Plated Steel
332.....Aluminum, Electroless Nickel Plated
333.....Carbon Steel, Electroless Nickel Plated
335.....Galvanized Steel
337.....Silver Plated Steel
351.....Food Grade Santoprene®
353.....Geolast; Color: Black
354.....Injection Molded #203-40 Santoprene® Duro 40D +/-5; Color: RED
356.....Hytrel®
357.....Injection Molded Polyurethane
358.....Urethane Rubber (Some Applications) (Compression Mold)
359.....Urethane Rubber
360.....Nitrile Rubber Color coded: RED
363.....FKM (Fluorocarbon) Color coded: YELLOW
364.....EPDM Rubber Color coded: BLUE
365.....Neoprene Rubber Color coded: GREEN
366.....Food Grade Nitrile
368.....Food Grade EPDM
371.....Philthane (Tuftane)
374.....Carboxylated Nitrile
375.....Fluorinated Nitrile
378.....High Density Polypropylene
379.....Conductive Nitrile
408.....Cork and Neoprene
425.....Compressed Fibre
426.....Blue Gard
440.....Vegetable Fibre
500.....Delrin® 500
502.....Conductive Acetal, ESD-800
503.....Conductive Acetal, Glass-Filled
506.....Delrin® 150
520.....Injection Molded PVDF Natural color
540.....Nylon
542.....Nylon
544.....Nylon Injection Molded
550.....Polyethylene
551.....Glass Filled Polypropylene
552.....Unfilled Polypropylene
555.....Polyvinyl Chloride
556.....Black Vinyl
558.....Conductive HDPE
570.....Rulon II®
580.....Ryton®
600.....PTFE (virgin material) Tetrafluorocarbon (TFE)
603.....Blue Gylon®
604.....PTFE
606.....PTFE
607.....Envelon
608.....Conductive PTFE
610.....PTFE Encapsulated Silicon
611.....PTFE Encapsulated FKM
632.....Neoprene/Hytrel®
633.....FKM/PTFE
634.....EPDM/PTFE
635.....Neoprene/PTFE
637.....PTFE, FKM/PTFE
638.....PTFE, Hytrel®/PTFE
639.....Nitrile/TFE
643.....Santoprene®/EPDM
644.....Santoprene®/PTFE
656.....Santoprene® Diaphragm and Check Balls/EPDM Seats
661.....EPDM/Santoprene®
666.....FDA Nitrile Diaphragm, PTFE Overlay, Balls, and Seals
668.....PTFE, FDA Santoprene®/PTFE

- Delrin and Hytrel are registered tradenames of E.I. DuPont.
- Nylatron is a registered tradename of Polymer Corp.
- Gylon is a registered tradename of Garlock, Inc.
- Santoprene is a registered tradename of Exxon Mobil Corp.
- Rulon II is a registered tradename of Dixion Industries Corp.
- Ryton is a registered tradename of Phillips Chemical Co.
- Valox is a registered tradename of General Electric Co.

RECYCLING

Warren Rupp is an ISO14001 registered company and is committed to minimizing the impact our products have on the environment. Many components of SANDPIPER® AODD pumps are made of recyclable materials. We encourage pump users to recycle worn out parts and pumps whenever possible, after any hazardous pumped fluids are thoroughly flushed. Pump users that recycle will gain the satisfaction to know that their discarded part(s) or pump will not end up in a landfill. The recyclability of SANDPIPER products is a vital part of Warren Rupp's commitment to environmental stewardship.

Air Valve with Stroke Indicator Assembly

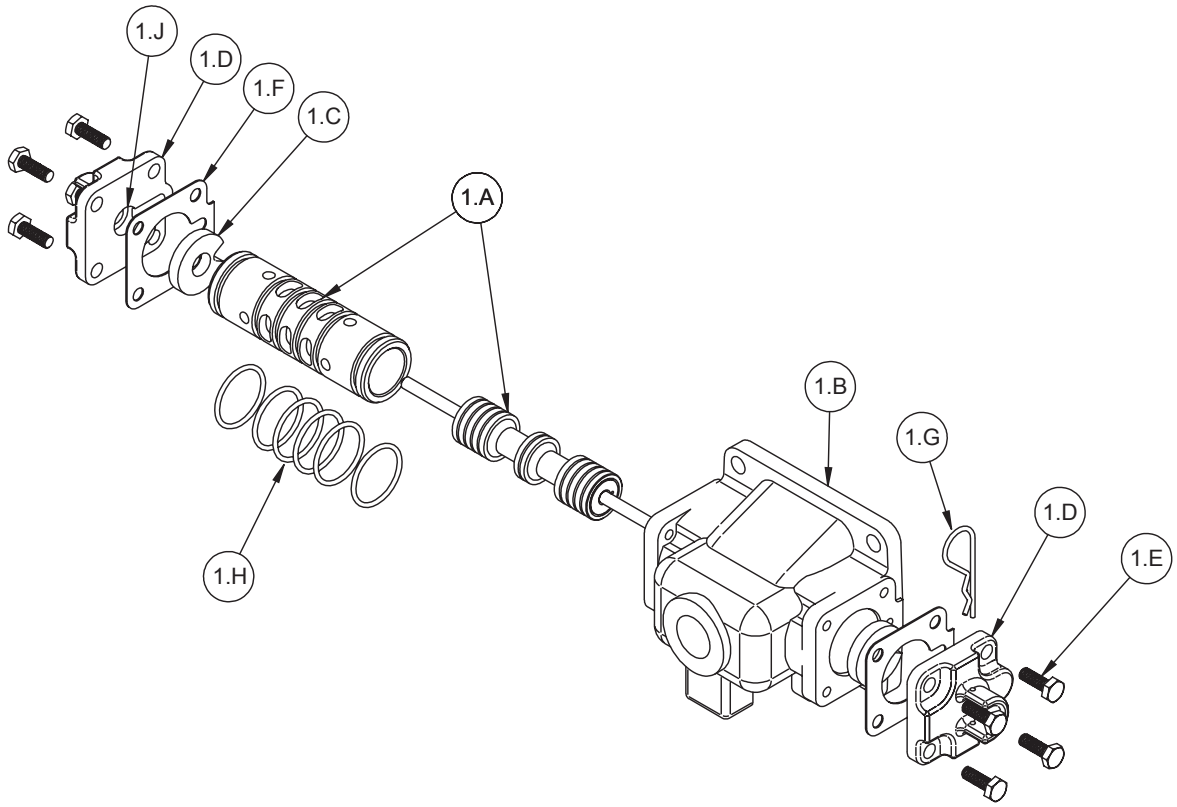

Air Distribution Valve Servicing

See repair parts drawing, remove screws.

Step 1: Remove end cap (1-D).

Step 2: Remove bumper (1-C).

Step 3: Remove spool part of (1-A) (caution, do not scratch).

Step 4: Press sleeve (1-A) from body (1-B).

Step 5: Inspect O-Ring (1-H) and replace if necessary.

Step 6: Lightly lubricate O-Rings (1-H) on spool (1-A).

Step 7: Press sleeve (1-A) into body (1-B).

Step 8: Reassemble in reverse order.

Note: Sleeve and spool (1-A) set is match ground to a specified clearance. Individual parts cannot be interchanged.

MAIN AIR VALVE ASSEMBLY PARTS LIST

Item	Part Number	Description	Qty
1	031.215.156	Air Valve Assembly	1
(1.A)	031.214.000	Sleeve and Spool Set	1
1.B	095.043.156	Air Valve Body	1
(1.C)	132.014.358	Bumper	2
1.D	165.066.010	End Cap	2
1.E	170.032.330	Hex Head Capscrew 1/4-20 UNC 2B x .75 long	8
(1.F)	360.010.425	Gasket	2
1.G	210.008.330	Safety Clip	1
(1.H)	560.020.360	O-ring	6
(1.J)	560.023.360	O-ring (included with item 1.D)	2
For Pumps with Cast Iron Center Sections:			
1	031.215.010	Air Valve Assembly	1
(1.A)	031.214.000	Sleeve and Spool Set	1
1.B	095.043.010	Air Valve Body	1
(1.C)	132.014.358	Bumper	2
1.D	165.066.010	End Cap	2
1.E	170.032.330	Hex Head Capscrew 1/4-20 UNC 2B x .75 long	8
(1.F)	360.010.425	Gasket	2
1.G	210.008.330	Safety Clip	1
(1.H)	560.020.360	O-ring	6
(1.J)	560.023.360	O-ring (included with item 1.D)	2

LEGEND:

◯ = Items contained within Air End Kits

Note: *Kits contain components specific to the material codes.*

Pilot Valve Assembly

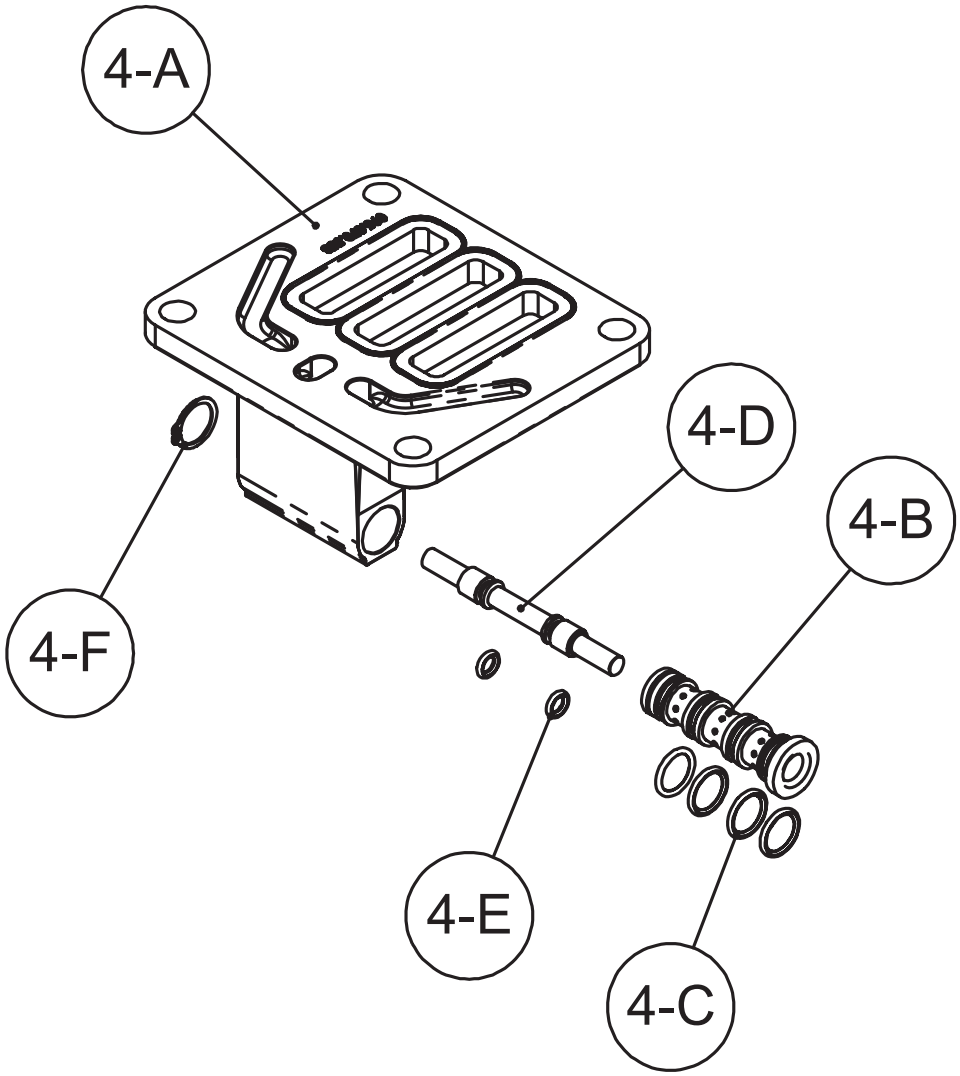

Pilot Valve Servicing

With Pilot Valve removed from pump.

Step 1: Remove snap ring (4-F).

Step 2: Remove sleeve (4-B), inspect O-Rings (4-C), replace if required.

Step 3: Remove spool (4-D) from sleeve (4-B), inspect O-Rings (4-E), replace if required.

Step 4: Lightly lubricate O-Rings (4-C) and (4-E).

Reassemble in reverse order.

PILOT VALVE ASSEMBLY PARTS LIST

Item	Part Number	Description	Qty
4	095.073.001	Pilot Valve Assembly	1
4-A	095.070.558	Valve Body	1
4-B	755.025.000	Sleeve (With O-Rings)	1
◯ 4-C	560.033.360	O-Ring (Sleeve)	4
4-D	775.026.000	Spool (With O-Rings)	1
◯ 4-E	560.023.360	O-Ring (Spool)	2
4-F	675.037.080	Retaining Ring	1

LEGEND:

◯ = Items contained within Air End Kits

Note: *Kits contain components specific to the material codes.*

5 - YEAR Limited Product Warranty

Warren Rupp, Inc. ("Warren Rupp") warrants to the original end-use purchaser that no product sold by Warren Rupp that bears a Warren Rupp brand shall fail under normal use and service due to a defect in material or workmanship within five years from the date of shipment from Warren Rupp's factory. Warren Rupp brands include Warren Rupp®,SANDPIPER®, SANDPIPER Signature Series™, MARATHON®, Porta-Pump®, SludgeMaster™ and Tranquilizer®.

The use of non-OEM replacement parts will void (or negate) agency certifications, including CE, ATEX, CSA, 3A and EC1935 compliance (Food Contact Materials). Warren Rupp, Inc. cannot ensure nor warrant non-OEM parts to meet the stringent requirements of the certifying agencies.

~ See complete warranty at https://www.sandpiperpump.com/

SANDPIPER®

EC Declaration of Conformity

Manufacturer:
Warren Rupp, Inc.
800 N. Main Street
Mansfield, Ohio, 44902 USA

Certifies that Air-Operated Double Diaphragm Pump Models: DSB Series, DMF Series, G Series, HDB Series, HDF Series, HP Series, F Series, MS Series, S Series, SL Series, SP Series, SSB Series, T Series, U1F Series, WR Series; High Pressure Pump Models: EH Series, GH Series, SH Series; Submersible Pump Models: SMA3 Series, SPA Series; and Surge Dampener/ Suppressor Models: DA Series, TA Series comply with the United Kingdom Statutory Instruments 2008 No. 1597, The Supply of Machinery (Safety) Regulations 2008, according to Annex VIII. This product has used Designated Standard EN809:2012, Pumps and Pump Units for Liquids - Common Safety Requirements, to verify conformance.

October 17, 2022
DATE/APPROVAL/TITLE:

Technical File on record with:
DEKRA Certification UK Limited
Stokenchurch House
Oxford Road
Stokenchurch
HP14 3SX



Signature of authorized person

Dennis Hall
Printed name of authorized person

Engineering Manager
Title

IDEX

UK CA

7: WARRANTY

SANDPIPER®

EC Declaration of Conformity

Manufacturer:
Warren Rupp, Inc.
800 N. Main Street
Mansfield, Ohio, 44902 USA

Certifies that Air-Operated Double Diaphragm Pump Models: DSB Series, DMF Series, G Series, HDB Series, HDF Series, HP Series, F Series, MS Series, S Series, SL Series, SP Series, SSB Series, T Series, U1F Series, WR Series; High Pressure Pump Models: EH Series, GH Series, SH Series; Submersible Pump Models: SMA3 Series, SPA Series; and Surge Dampener/ Suppressor Models: DA Series, TA Series comply with the United Kingdom Statutory Instruments 2008 No. 1597, The Supply of Machinery (Safety) Regulations 2008, according to Annex VIII. This product has used Designated Standard EN809:2012, Pumps and Pump Units for Liquids - Common Safety Requirements, to verify conformance.

October 17, 2022
DATE/APPROVAL/TITLE:

Technical File on record with:
DEKRA Certification UK Limited
Stokenchurch House
Oxford Road
Stokenchurch
HP14 3SX

Signature of authorized person

Dennis Hall
Printed name of authorized person

Engineering Manager
Title

IDEX

UK CA

7: WARRANTY

SANDPIPER®

ATEX

IDEX

EU Declaration of Conformity

Manufacturer:

Warren Rupp, Inc.
A Unit of IDEX Corporation
800 North Main Street
Mansfield, OH 44902 USA

This declaration of conformity is issued under the sole responsibility of the manufacturer. Warren Rupp, Inc. declares that Air Operated Double Diaphragm Pumps (AODD) and Surge Suppressors listed below comply with the requirements of Directive **2014/34/EU** and applicable harmonized standards.

Harmonized Standards:

- EN ISO 80079-36: 2016
- EN ISO 80079-37: 2016
- EN 60079-25: 2010

1. AODD Pumps and Surge Suppressors - Technical File on record with: DEKRA Certification B.V.
Meander 1051
6825 MJ Arnhem
The Netherlands

Hazardous Location Applied:

⟨Ex⟩ II 2 G Ex h IIC T5...225°C (T2) Gb
II 2 D Ex h IIIC T100°C...T200°C Db

- Metallic pump models with external aluminum components (DMF Series, EH Series, F Series, G & GH Series, HDB Series, HDF Series, MS Series, S Series, SH Series, SL Series, SP Series, ST Series, T Series, and U1F Series)
- Conductive plastic pump models with integral muffler (PB Series, S Series, SL Series, SP Series)
- Tranquilizer® surge suppressors (TA Series)

⟨Ex⟩ II 2 G Ex h IIB T5...225°C (T2) Gb
II 2 D Ex h IIIB T100°C...T200°C Db

- ST Series with sight tubes (VL) and HP Series because of the projected area of non-conductive external components

2. AODD Pumps - EU Type Examination Certificate No.: DEKRA 18ATEX0094X - DEKRA Certification B.V. (0344)
Meander 1051
6825 MJ Arnhem
The Netherlands

Hazardous Location Applied:

⟨Ex⟩ I M1 Ex h I Ma
II 1 G Ex h IIC T5...225°C (T2) Ga
II 1 D Ex h IIIC T100°C...T200°C Da

- Metallic pump models with no external aluminum (S series, HDB Series, HDF Series, G Series)
- Conductive plastic pumps equipped with metal muffler (S series, PB Series)

⟨Ex⟩ II 2 G Ex h ia IIC T5 Gb
II 2 D Ex h ia IIIC T100°C Db

- All pump model series excluding G15, G20,G30 equipped with ATEX rated pulse output option

⟨Ex⟩ II 2 G Ex h mb IIC T5 Gb
II 2 D Ex h mb tb IIIC T100° Db

- Pump model series S05, S1F, S15, S20, S30 equipped with ATEX rated integral solenoid option

➢ See “ATEX Details” page in user’s manual for more information
➢ See “Safety Information” page for conditions of safe use

DATE/APPROVAL/TITLE:
03 OCT 2022

Dennis Hall
Engineering Manager

SANDPIPER®

UKEx

IDEX

EU Declaration of Conformity

Manufacturer:

Warren Rupp, Inc.
A Unit of IDEX Corporation
800 North Main Street
Mansfield, OH 44902 USA

This declaration of conformity is issued under the sole responsibility of the manufacturer.
Warren Rupp, Inc declares that Air Operated Double Diaphragm Pumps (AODD) and Surge Suppressors listed below comply with the requirements of United Kingdom Statutory Instruments **2016 No. 1107** and all the applicable standards.

Designated Standards:

- EN ISO 80079-36: 2016
- EN ISO 80079-37: 2016
- EN 60079-25: 2010

1. AODD Pumps and Surge Suppressors - Technical File on record with: DEKRA Certification UK Limited
Stokenchurch House
Oxford Road
Stokenchurch
HP14 3SX

Hazardous Location Applied:



II 2 G Ex h IIC T5...225°C (T2) Gb
II 2 D Ex h IIIC T100°C...T200°C Db

- Metallic pump models with external aluminum components (DMF Series, EH Series, F Series, G & GH Series, HDB Series, HDF Series, MS Series, S Series, SH Series, SL Series, SP Series, ST Series, T Series, and U1F Series)
- Conductive plastic pump models with integral muffler (PB Series, S Series, SL Series, SP Series)
- Tranquilizer® surge suppressors (TA Series)



II 2 G Ex h IIB T5...225°C (T2) Gb
II 2 D Ex h IIIB T100°C...T200°C Db

- ST Series with sight tubes (VL) and HP Series because of the projected area of non-conductive external components

➢ See “ATEX Details” page in user’s manual for more information
➢ See “Safety Information” page for conditions of safe use

DATE/APPROVAL/TITLE:
17 OCT 2022

Dennis Hall
Engineering Manager

WR_DofC_UKEx_V_Rev102