# SERVICE & OPERATING MANUAL

**Original Instructions**

**Certified Quality**

SAI GLOBAL

*ISO 9001 Certified*
*ISO 14001 Certified*

# Model ST1 & ST25

## Containment Duty
## Design Level 5

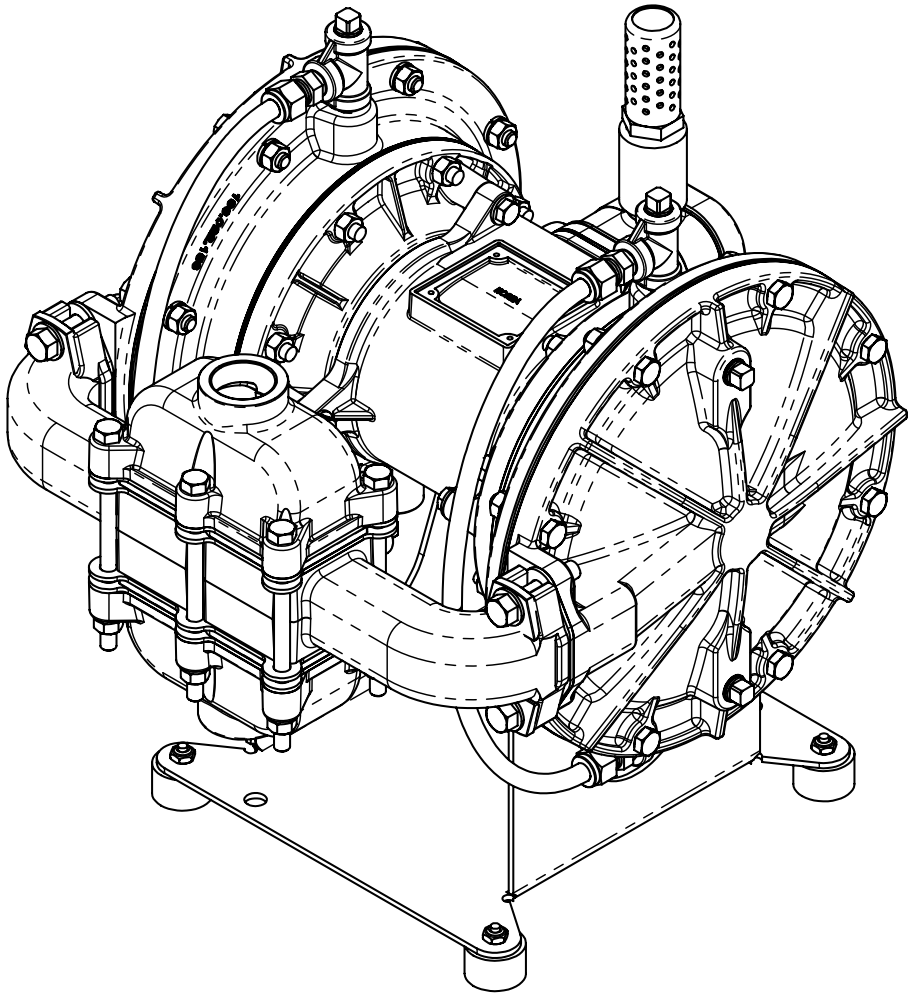



**Warren Rupp, Inc.**
A Unit of IDEX Corporation
800 N. Main St.,
Mansfield, Ohio 44902 USA
Telephone (419) 524.8388
Fax (419) 522.7867
WWW.SANDPIPERPUMP.COM

©2022 Warren Rupp, Inc.

SANDPIPER®
A WARREN RUPP, INC. BRAND
WWW.SANDPIPERPUMP.COM

# Safety Information

## ⚠ IMPORTANT



*Read the safety warnings and instructions in this manual before pump installation and start-up. Failure to comply with the recommendations stated in this manual could damage the pump and void factory warranty.*



*When the pump is used for materials that tend to settle out or solidify, the pump should be flushed after each use to prevent damage. In freezing temperatures the pump should be completely drained between uses.*

## ⚠ CAUTION



*Before pump operation, inspect all fasteners for loosening caused by gasket creep. Retighten loose fasteners to prevent leakage. Follow recommended torques stated in this manual.*



*Nonmetallic pumps and plastic components are not UV stabilized. Ultraviolet radiation can damage these parts and negatively affect material properties. Do not expose to UV light for extended periods of time.*



***WARNING***
*Pump not designed, tested or certified to be powered by compressed natural gas. Powering the pump with natural gas will void the warranty.*



***WARNING***
*The use of non-OEM replacement parts will void (or negate) agency certifications, including CE, ATEX, CSA, 3A and EC1935 compliance (Food Contact Materials). Warren Rupp, Inc. cannot ensure nor warrant non-OEM parts to meet the stringent requirements of the certifying agencies.*

## ⚠ WARNING



*When used for toxic or aggressive fluids, the pump should always be flushed clean prior to disassembly.*



*Before maintenance or repair, shut off the compressed air line, bleed the pressure, and disconnect the air line from the pump. Be certain that approved eye protection and protective clothing are worn at all times. Failure to follow these recommendations may result in serious injury or death.*



*Airborne particles and loud noise hazards. Wear eye and ear protection.*



*In the event of diaphragm rupture, pumped material may enter the air end of the pump, and be discharged into the atmosphere. If pumping a product that is hazardous or toxic, the air exhaust must be piped to an appropriate area for safe containment.*



*Take action to prevent static sparking. Fire or explosion can result, especially when handling flammable liquids. The pump, piping, valves, containers and other miscellaneous equipment must be properly grounded.*



*This pump is pressurized internally with air pressure during operation. Make certain that all fasteners and piping connections are in good condition and are reinstalled properly during reassembly.*



*Use safe practices when lifting*

# ATEX Pumps - Conditions For Safe Use

1. Ambient temperature range is as specified in tables 1 to 3 on the next page *(per Annex I of DEKRA 18ATEX0094X)*

2. ATEX compliant pumps are suitable for use in explosive atmospheres when the equipment is properly grounded in accordance with local electrical codes

3. **Non-Metallic ATEX Pumps only — See Explanation of Pump Nomenclature / ATEX Details Page**
   Conductive Polypropylene, conductive Acetal or conductive PVDF pumps are not to be installed in applications where the pumps may be subjected to oil, greases and hydraulic liquids.

4. The optionally provided solenoids shall be protected by a fuse corresponding to its rated current (max 3*Irat according to EN 60127) or by a motor protecting switch with short circuit and thermal instantaneous tripping (set to the rated current) as short circuit protection. For solenoids with a very low rated current, a fuse with the lowest current value according to the indicated standard will be sufficient. The fuse may be accommodated in the associated supply unit or shall be separately arranged. The rated voltage of the fuse shall be equal or greater than the stated rated voltage of the solenoid. The breaking capacity of the fuse shall be as high as or higher than the maximum expected short circuit current at the location of the installation (usually 1500 A). The maximum permissible ripple is 20% for all dc solenoids.
   ***Not applicable for all pump models — See Explanation of Pump Nomenclature / ATEX Details Page**

5. When operating pumps equipped with non-conductive diaphragms that exceed the maximum permissible projected area, as defined in EN ISO 80079-36 : 2016 section 6.7.5 table 8, the following protection methods must be applied
   - Equipment is always used to transfer electrically conductive fluids or
   - Explosive environment is prevented from entering the internal portions of the pump, i.e. dry running.

6. Pumps provided with the pulse output kit and used in the potentially explosive atmosphere caused by the presence of the combustible dust shall be installed in such a way that the pulse output kit is protected against impact
   ***Not applicable for all pump models — See Explanation of Pump Nomenclature / ATEX Details Page**

# Temperature Tables

### Table 1. Category 1 & Category 2 ATEX Rated Pumps

| Ambient Temperature Range [°C] | Process Temperature Range [°C][1] | Temperature Class | Maximum Surface Temperature [°C] |
|---|---|---|---|
| -20°C to +60°C | -20°C to +80°C | T5 | T100°C |
| | -20°C to +108°C | T4 | T135°C |
| | -20°C to + 160°C | T3 | T200°C |
| | -20°C to +177°C | (225°C) T2 | |

[1]Per CSA standards ANSI LC6-2018 US & Canadian Technical Letter R14, G-Series Natural Gas Models are restricted to (-20°C to + 80°C) process temperature

### Table 2. Category 2 ATEX Rated Pumps Equipped with Pulse Output Kit or Integral Solenoid:

| Ambient Temperature Range [°C] | Process Temperature Range [°C] | Temperature Class | Maximum Surface Temperature [°C] | Options | |
|---|---|---|---|---|---|
| | | | | Pulse Output Kit | Integral Solenoid |
| -20°C to +60°C | -20°C to +100°C | T5 | T100 | X | |
| -20°C to +50°C | -20°C to +100°C | T5 | T100 | | X |

[2]ATEX Pulse output or Intergral Solenoid Not Available For All Pump Models See Explanation of Pump Nomenclature / ATEX Details Page

### Table 3. Category M1 ATEX Rated Pumps for Mining

| Ambient Temperature Range [°C] | Process Temperature Range [°C] |
|---|---|
| -20°C to +60°C | -20°C to +150°C |

Note: The ambient temperature range and the process temperature range should not exceed the operating temperature range of the applied non-metallic parts as listed in the manuals of the pumps.

# Table of Contents



**SECTION 1: PUMP SPECIFICATIONS.....1**
- Explanation of Nomenclature
- Performance
- Materials
- Dimensional Drawings

**SECTION 2: INSTALLATION & OPERATION ...4**
- Principle of Pump Operation
- Recommended Installation Guide
- Filling the Driver Chambers with Fluid
- Troubleshooting Guide

**SECTION 3: EXPLODED VIEW.....7**
- Composite Repair Parts Drawing
- Composite Repair Parts List
- Material Codes

**SECTION 4: AIR END .....11**
- Air Distribution Valve Assembly
- Pilot Valve Assembly

**SECTION 7: WARRANTY & CERTIFICATES ..13**
- Warranty
- CE Declaration of Conformity - Directive 2006/42/EC Machinery
- ATEX Declaration of Conformity - Directive 94/9/EC

# Explanation of Pump Nomenclature

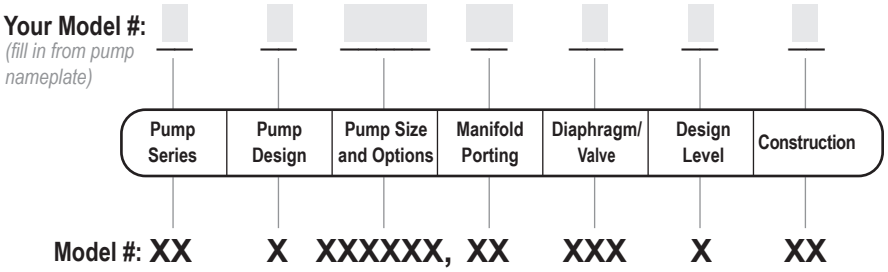


**Pump Series**
**S** SANDPIPER®

**Pump Design**
**T** Spill Containment

**Pump Size & Options**
**1** 1" NPT
**25** 1" BSP Tapered

**Options**
**VL** Visual Leak Detection Sight Tubes

**Manifold Porting Position**
**D** Side

**Diaphragm Check Valve Materials**
**NG** Neoprene Driver Diaphragms, PTFE Pumping Diaphragms and PTFE Check Balls
**VG** FKM Driver Diaphragms / PTFE Pumping Diaphragms and PTFE Check Balls
**GNG** Neoprene Back-Up with PTFE Overlay Driver Diaphragms, PTFE Pumping Diaphragms and PTFE Check Balls

**Design Level**
**5**

**Construction**
**A** Aluminum Wetted, Aluminum Air
**SS** Stainless Steel Wetted, Aluminum Air
**HC** Alloy-C Wetted, Aluminum Air

**Your Serial #:** *(fill in from pump nameplate)* _____

# ATEX Detail

**All Pump Models:**

| | ATEX Details | Options:VL |
|---|---|---|
|  | II 2 G Ex h IIC T5...225°C (T2) Gb<br>II 2 D Ex h IIIC T100°C...T200°C Db | No |
| | II 2 G Ex h IIB T5...225°C (T2) Gb<br>II 2 D Ex h IIIB T100°C...T200°C Db | Yes |

# Performance

## ST1 & ST25 Containment Duty

**SUCTION/DISCHARGE PORT SIZE**
- ST1: 1" NPT (internal)
- ST25: 1" BSP Tapered (internal)

**CAPACITY**
- 0 to 42 gallons per minute (0 to 159 liters per minute)

**AIR DISTRIBUTION VALVE**
- No-lube, no-stall design

**SOLIDS-HANDLING**
- Occational solids only, to nearly .25" (6.3mm)

**HEADS UP TO**
- 125 psi or 289 ft. of water (8.8 Kg/cm$^2$ or 88 meters)

**MAXIMUM OPERATING PRESSURE**
- 125 psi (8.6 bar)

**DISPLACEMENT/STROKE**
- .09 Gallon / .34 liter

**SHIPPING WEIGHT**
- Aluminum 46 lbs. (20kg)
- Stainless Steel 67 lbs. (30kg)

### MODEL ST1/ST25 Performance Curve

Performance based on the following: elastomer fitted pump, flooded suction, water at ambient conditions. The use of other materials and varying hydraulic conditions may result in deviations in excess of 5%.

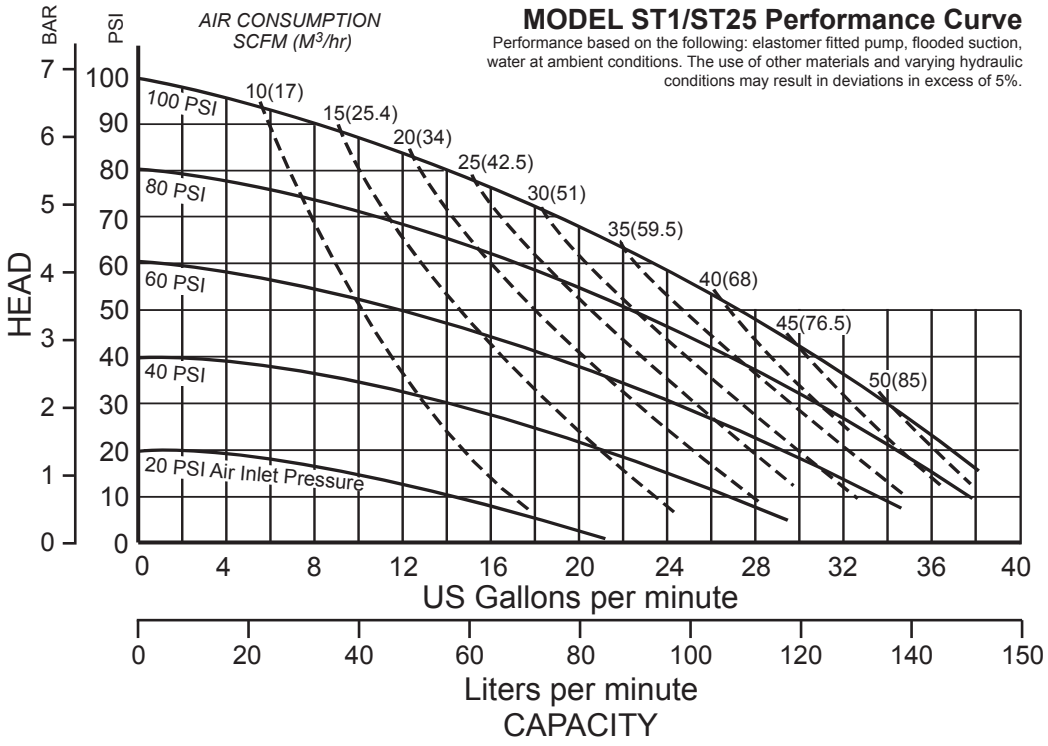


# Materials

| Material Profile: | Operating Temperatures: | |
|---|---|---|
| ⚠ *CAUTION! Operating temperature limitations are as follows:* | Max. | Min. |
| **Conductive Acetal:** Tough, impact resistant, ductile. Good abrasion resistance and low friction surface. Generally inert, with good chemical resistance except for strong acids and oxidizing agents. | 190°F 88°C | -20°F -29°C |
| **EPDM:** Shows very good water and chemical resistance. Has poor resistance to oils and solvents, but is fair in ketones and alcohols. | 280°F 138°C | -40°F -40°C |
| **FKM:** (Fluorocarbon) Shows good resistance to a wide range of oils and solvents; especially all aliphatic, aromatic and halogenated hydrocarbons, acids, animal and vegetable oils. Hot water or hot aqueous solutions (over 70°F(21°C)) will attack FKM. | 350°F 177°C | -40°F -40°C |
| **Hytrel®:** Good on acids, bases, amines and glycols at room temperatures only. | 220°F 104°C | -20°F -29°C |
| **Neoprene:** All purpose. Resistance to vegetable oils. Generally not affected by moderate chemicals, fats, greases and many oils and solvents. Generally attacked by strong oxidizing acids, ketones, esters and nitro hydrocarbons and chlorinated aromatic hydrocarbons. | 200°F 93°C | -10°F -23°C |
| **Nitrile:** General purpose, oil-resistant. Shows good solvent, oil, water and hydraulic fluid resistance. Should not be used with highly polar solvents like acetone and MEK, ozone, chlorinated hydrocarbons and nitro hydrocarbons. | 190°F 88°C | -10°F -23°C |
| **Nylon:** 6/6 High strength and toughness over a wide temperature range. Moderate to good resistance to fuels, oils and chemicals. | 180°F 82°C | 32°F 0°C |
| **Polypropylene:** A thermoplastic polymer. Moderate tensile and flex strength. Resists stong acids and alkali. Attacked by chlorine, fuming nitric acid and other strong oxidizing agents. | 180°F 82°C | 32°F 0°C |
| **PVDF:** (Polyvinylidene Fluoride) A durable fluoroplastic with excellent chemical resistance. Excellent for UV applications. High tensile strength and impact resistance. | 250°F 121°C | 0°F -18°C |
| **Santoprene®:** Injection molded thermoplastic elastomer with no fabric layer. Long mechanical flex life. Excellent abrasion resistance. | 275°F 135°C | -40°F -40°C |
| **UHMW PE:** A thermoplastic that is highly resistant to a broad range of chemicals. Exhibits outstanding abrasion and impact resistance, along with environmental stress-cracking resistance. | 180°F 82°C | -35°F -37°C |
| **Urethane:** Shows good resistance to abrasives. Has poor resistance to most solvents and oils. | 150°F 66°C | 32°F 0°C |
| **Virgin PTFE:** (PFA/TFE) Chemically inert, virtually impervious. Very few chemicals are known to chemically react with PTFE; molten alkali metals, turbulent liquid or gaseous fluorine and a few fluoro-chemicals such as chlorine trifluoride or oxygen difluoride which readily liberate free fluorine at elevated temperatures. | 220°F 104°C | -35°F -37°C |

*Maximum and Minimum Temperatures are the limits for which these materials can be operated. Temperatures coupled with pressure affect the longevity of diaphragm pump components. Maximum life should not be expected at the extreme limits of the temperature ranges.*

| Metals: |
|---|
| **Alloy C:** Equal to ASTM494 CW-12M-1 specification for nickel and nickel alloy. |
| **Stainless Steel:** Equal to or exceeding ASTM specification A743 CF-8M for corrosion resistant iron chromium, iron chromium nickel and nickel based alloy castings for general applications. Commonly referred to as 316 Stainless Steel in the pump industry. |

For specific applications, always consult the Chemical Resistance Chart.

# Dimensional Drawings

## ST1 & ST25 Containment Duty

Dimensions are ±1/8". Figures in parentheses = millimeters.

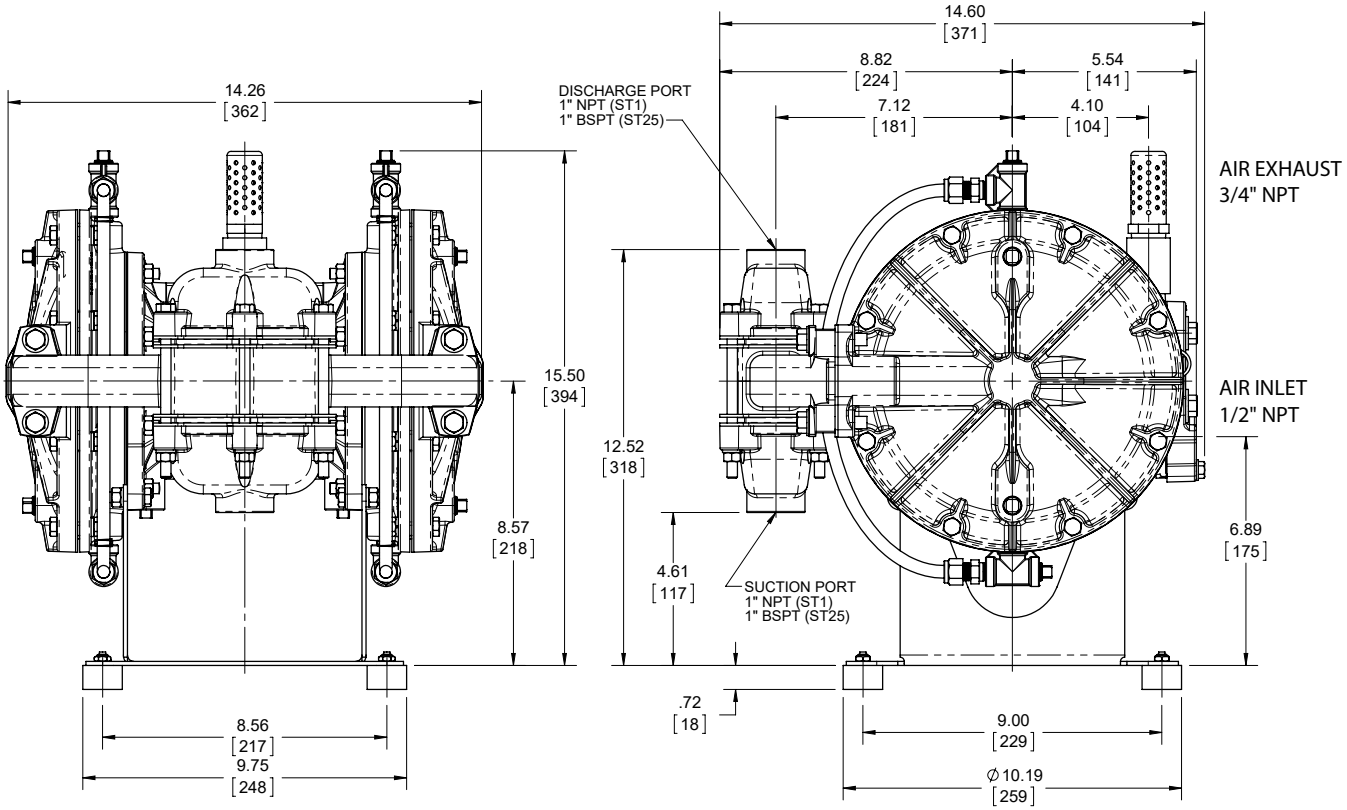


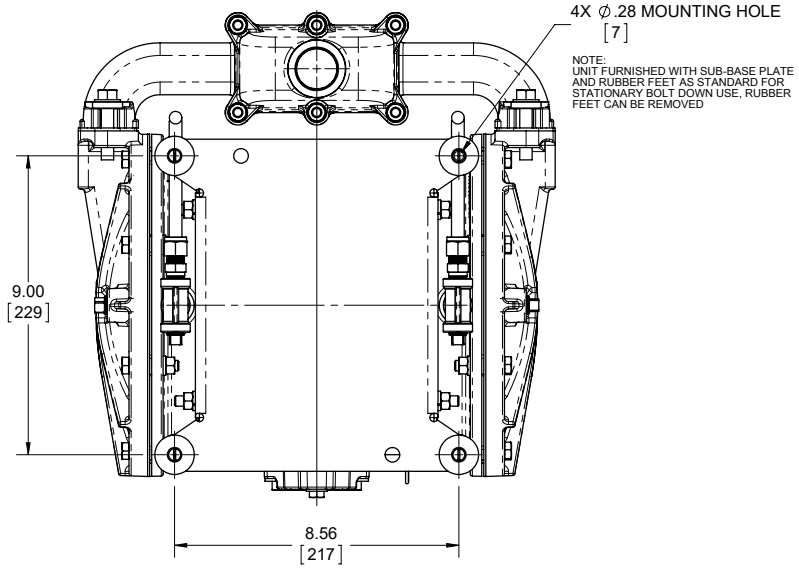

# Principle of Pump Operation

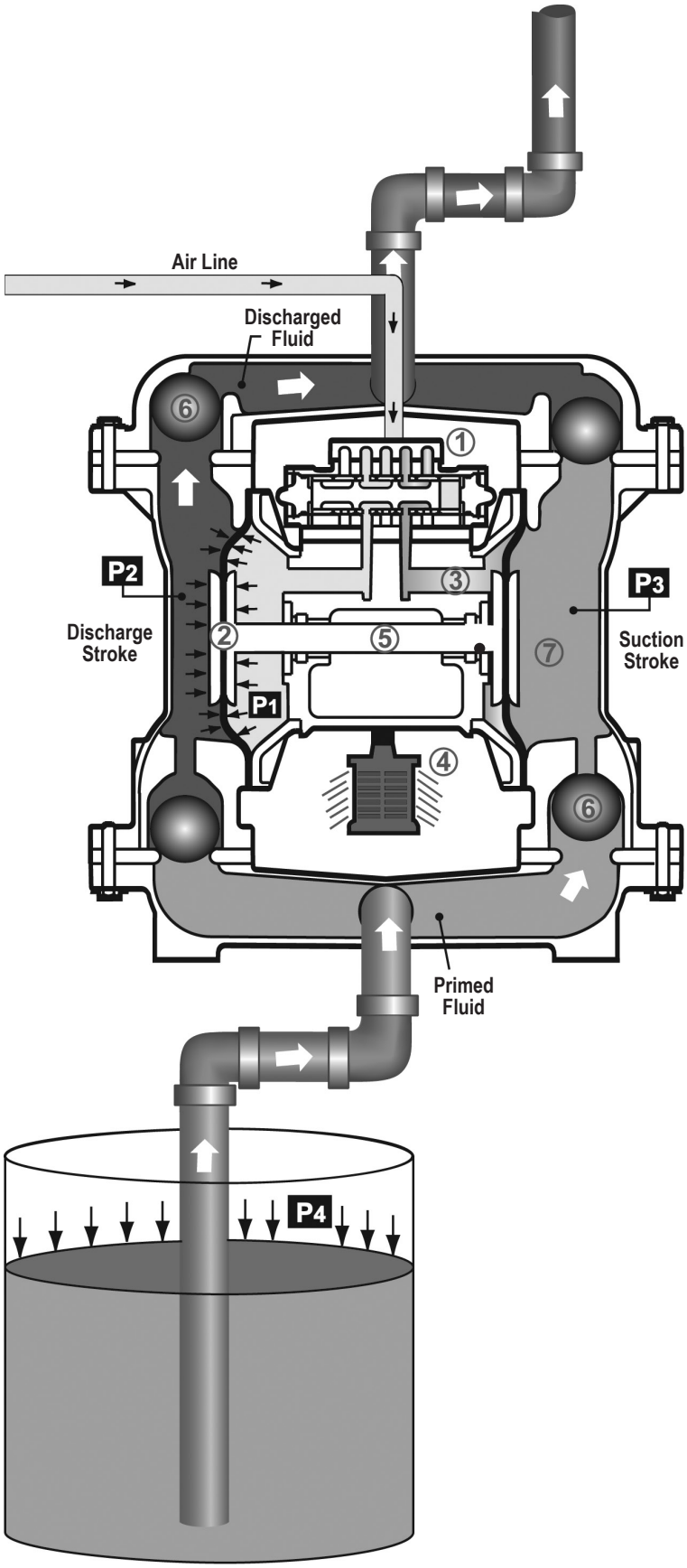


Air-Operated Double Diaphragm (AODD) pumps are powered by compressed air or nitrogen.

The main directional (air) control valve ① distributes compressed air to an air chamber, exerting uniform pressure over the inner surface of the diaphragm ②. At the same time, the exhausting air ③ from behind the opposite diaphragm is directed through the air valve assembly(s) to an exhaust port ④.

As inner chamber pressure **(P1)** exceeds liquid chamber pressure **(P2)**, the rod ⑤ connected diaphragms shift together creating discharge on one side and suction on the opposite side. The discharged and primed liquid's directions are controlled by the check valves (ball or flap)⑥ orientation.

The pump primes as a result of the suction stroke. The suction stroke lowers the chamber pressure **(P3)** increasing the chamber volume. This results in a pressure differential necessary for atmospheric pressure **(P4)** to push the fluid through the suction piping and across the suction side check valve and into the outer fluid chamber ⑦.

Suction (side) stroking also initiates the reciprocating (shifting, stroking or cycling) action of the pump. The suction diaphragm's movement is mechanically pulled through its stroke. The diaphragm's inner plate makes contact with an actuator plunger aligned to shift the pilot signaling valve. Once actuated, the pilot valve sends a pressure signal to the opposite end of the main directional air valve, redirecting the compressed air to the opposite inner chamber.

## SUBMERGED ILLUSTRATION

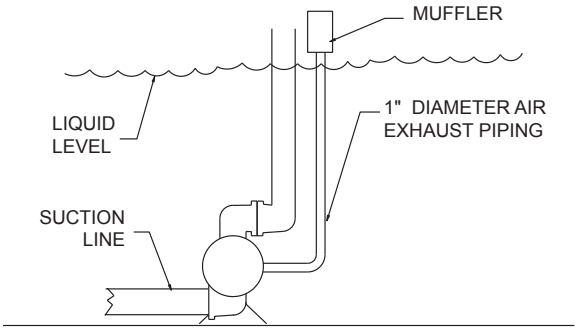


Pump can be submerged if the pump materials of construction are compatible with the liquid being pumped. The air exhaust must be piped above the liquid level. When the pumped product source is at a higher level than the pump (flooded suction condition), pipe the exhaust higher than the product source to prevent siphoning spills.

# Recommended Installation Guide

**Available Accessories:**

1. Surge Suppressor
2. Filter/Regulator
3. Air Dryer
4. Lubricator

**Note**: Surge Suppressor and Piping, including air line, must be supported after the flexible connections.

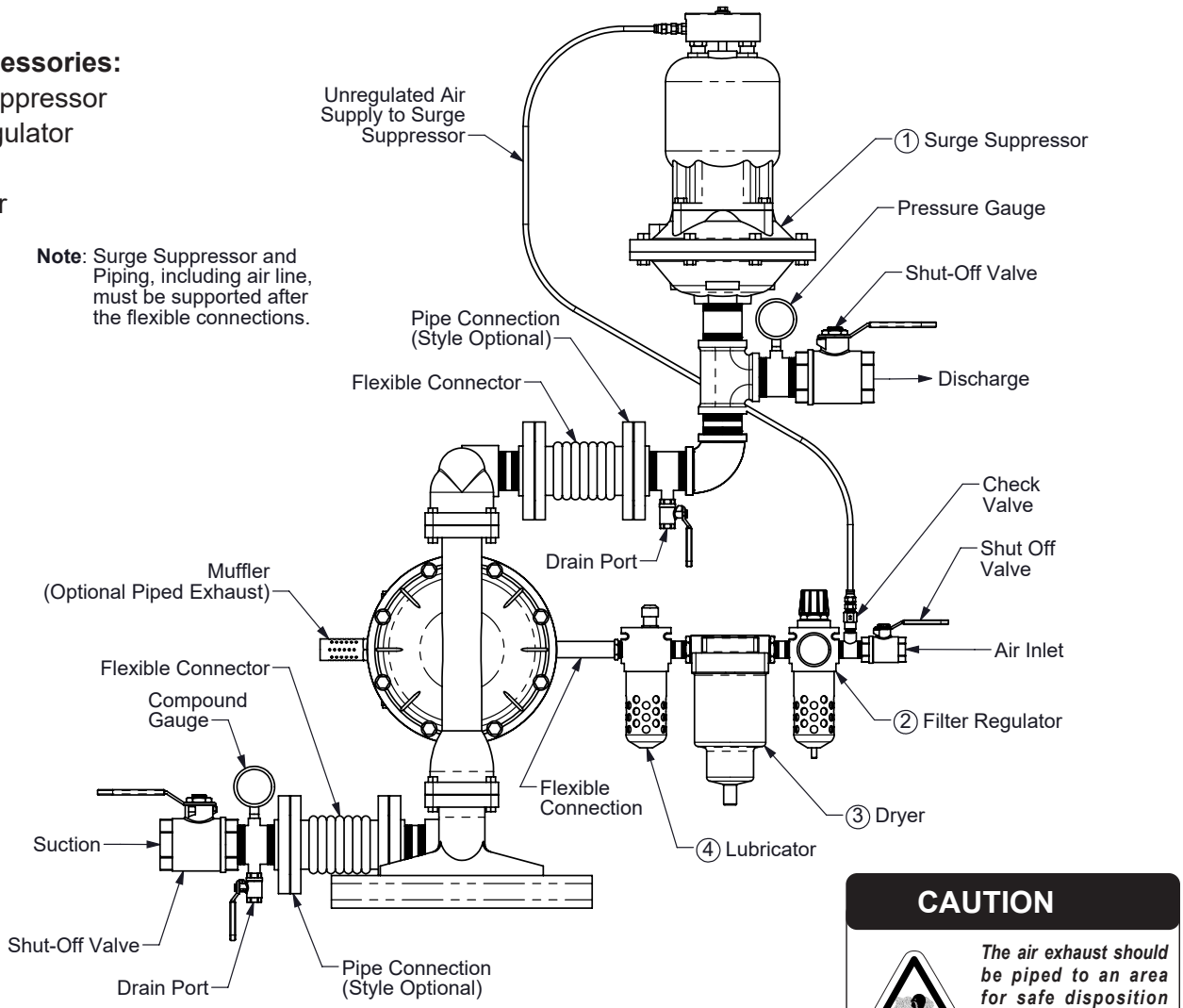


**CAUTION**



***The air exhaust should be piped to an area for safe disposition of the product being pumped, in the event of a diaphragm failure.***

**Installation And Start-Up**

Locate the pump as close to the product being pumped as possible. Keep the suction line length and number of fittings to a minimum. Do not reduce the suction line diameter.

**Air Supply**

Connect the pump air inlet to an air supply with sufficient capacity and pressure to achieve desired performance. A pressure regulating valve should be installed to insure air supply pressure does not exceed recommended limits.

**Air Valve Lubrication**

The air distribution system is designed to operate WITHOUT lubrication. This is the standard mode of operation. If lubrication is desired, install an air line lubricator set to deliver one drop of SAE 10 non-detergent oil for every 20 SCFM (9.4 liters/sec.) of air the pump consumes. Consult the Performance Curve to determine air consumption.

**Air Line Moisture**

Water in the compressed air supply may cause icing or freezing of the exhaust air, causing the pump to cycle erratically or stop operating. Water in the air supply can be reduced by using a point-of-use air dryer.

**Air Inlet And Priming**

To start the pump, slightly open the air shut-off valve. After the pump primes, the air valve can be opened to increase air flow as desired. If opening the valve increases cycling rate, but does not increase the rate of flow, cavitation has occurred. The valve should be closed slightly to obtain the most efficient air flow to pump flow ratio.

# Filling the Driver Chambers with Liquid



**THE DRIVER CHAMBERS WILL BE FILLED WITH DISTILLED WATER AT THE FACTORY.**

If you need to substitute another liquid to prevent system contamination, first consult the factory for chemical compatibility with pump construction.

Follow the steps listed below to replace the liquid in the pump after disassembly or liquid loss:

**Step 1**. Filling is accomplished through the pipe plugs at the top of the liquid chamber. Drain ports are at the bottom of the liquid chamber.

**Step 2**. After the driver fluid has been emptied from the pump, the driver diaphragms will naturally come to center.

**Step 3**. Remove the entire manifold assembly exposing the ports in the outer diaphragm chambers.

**Step 4**. For pumps not equipped with Visual Leak Detection sight tubes, fill with 722ml/ 24.6 fl. oz.

For pumps equipped with Visual Leak Detection sight tubes, fill with 752ml/ 25.4 fl. oz.

It is imperative that the driver liquid chambers be filled with the correct amount of driver liquid as too little or too much will cause premature diaphragm failure and erratic pumping.

Insert the safety clip (210.008.330) on one side of the main air valve body. The end cap has a hole to insert the pin to prevent the spool from shifting. Apply air the pump at 5 to 10 psi. As you face the pump, the side with the pin should be the first driver fluid reservoir to be filled. The driver diaphragm will be on a suction stroke. Pour the correct amount of liquid into the reservoir (fluid amounts listed in step 4). The fluid level will not come completely to the top. Loosely install the pipe plug, with pipe dope placed on the threads. Release all air pressure to the pump and remove the safety clip. The diaphragm will relax and will come to center. Watch the loose pipe plug closely as air escapes and the driver fluid level rises. Once the fluid begins to seep from the plug, tighten the plug. Shut air supply off. Use a pin or the safety clip to manually shift the spool to the opposite side. Insert the safety clip on the opposite side and add a small amount of air pressure. When you see liquid weeping out between the loose pipe plug and fill hole, tighten the pipe plug. Repeat the procedure for the unfilled chamber.

# Troubleshooting Guide

| Symptom: | Potential Cause(s): | Recommendation(s): |
|---|---|---|
| **Pump Cycles Once** | Deadhead (system pressure meets or exceeds air supply pressure). | Increase the inlet air pressure to the pump. Pump is designed for 1:1 pressure ratio at zero flow. (Does not apply to high pressure 2:1 units). |
| | Air valve or intermediate gaskets installed incorrectly. | Install gaskets with holes properly aligned. |
| | Bent or missing actuator plunger. | Remove pilot valve and inspect actuator plungers. |
| **Pump Will Not Operate / Cycle** | Pump is over lubricated. | Set lubricator on lowest possible setting or remove. Units are designed for lube free operation. |
| | Lack of air (line size, PSI, CFM). | Check the air line size and length, compressor capacity (HP vs. cfm required). |
| | Check air distribution system. | Disassemble and inspect main air distribution valve, pilot valve and pilot valve actuators. |
| | Discharge line is blocked or clogged manifolds. | Check for inadvertently closed discharge line valves. Clean discharge manifolds/piping. |
| | Deadhead (system pressure meets or exceeds air supply pressure). | Increase the inlet air pressure to the pump. Pump is designed for 1:1 pressure ratio at zero flow. (Does not apply to high pressure 2:1 units). |
| | Blocked air exhaust muffler. | Remove muffler screen, clean or de-ice, and re-install. |
| | Pumped fluid in air exhaust muffler. | Disassemble pump chambers. Inspect for diaphragm rupture or loose diaphragm plate assembly. |
| | Pump chamber is blocked. | Disassemble and inspect wetted chambers. Remove or flush any obstructions. |
| **Pump Cycles and Will Not Prime or No Flow** | Cavitation on suction side. | Check suction condition (move pump closer to product). |
| | Check valve obstructed. Valve ball(s) not seating properly or sticking. | Disassemble the wet end of the pump and manually dislodge obstruction in the check valve pocket. Clean out around valve ball cage and valve seat area. Replace valve ball or valve seat if damaged. Use heavier valve ball material. |
| | Valve ball(s) missing (pushed into chamber or manifold). | Worn valve ball or valve seat. Worn fingers in valve ball cage (replace part). Check Chemical Resistance Guide for compatibility. |
| | Valve ball(s) / seat(s) damaged or attacked by product. | Check Chemical Resistance Guide for compatibility. |
| | Check valve and/or seat is worn or needs adjusting. | Inspect check valves and seats for wear and proper setting. Replace if necessary. |
| | Suction line is blocked. | Remove or flush obstruction. Check and clear all suction screens or strainers. |
| | Excessive suction lift. | For lifts exceeding 20' of liquid, filling the chambers with liquid will prime the pump in most cases. |
| | Suction side air leakage or air in product. | Visually inspect all suction-side gaskets and pipe connections. |
| | Pumped fluid in air exhaust muffler. | Disassemble pump chambers. Inspect for diaphragm rupture or loose diaphragm plate assembly. |
| **Pump Cycles Running Sluggish / Stalling, Flow Unsatisfactory** | Over lubrication. | Set lubricator on lowest possible setting or remove. Units are designed for lube free operation. |
| | Icing. | Remove muffler screen, de-ice, and re-install. Install a point of use air drier. |
| | Clogged manifolds. | Clean manifolds to allow proper air flow. |
| | Deadhead (system pressure meets or exceeds air supply pressure). | Increase the inlet air pressure to the pump. Pump is designed for 1:1 pressure ratio at zero flow. (Does not apply to high pressure 2:1 units). |
| | Cavitation on suction side. | Check suction (move pump closer to product). |
| | Lack of air (line size, PSI, CFM). | Check the air line size, length, compressor capacity. |
| | Excessive suction lift. | For lifts exceeding 20' of liquid, filling the chambers with liquid will prime the pump in most cases. |
| | Air supply pressure or volume exceeds system hd. | Decrease inlet air (press. and vol.) to the pump. Pump is cavitating the fluid by fast cycling. |
| | Undersized suction line. | Meet or exceed pump connections. |
| | Restrictive or undersized air line. | Install a larger air line and connection. |
| | Suction side air leakage or air in product. | Visually inspect all suction-side gaskets and pipe connections. |
| | Suction line is blocked. | Remove or flush obstruction. Check and clear all suction screens or strainers. |
| | Pumped fluid in air exhaust muffler. | Disassemble pump chambers. Inspect for diaphragm rupture or loose diaphragm plate assembly. |
| | Check valve obstructed. | Disassemble the wet end of the pump and manually dislodge obstruction in the check valve pocket. |
| | Check valve and/or seat is worn or needs adjusting. | Inspect check valves and seats for wear and proper setting. Replace if necessary. |
| | Entrained air or vapor lock in chamber(s). | Purge chambers through tapped chamber vent plugs. Purging the chambers of air can be dangerous. |
| **Product Leaking Through Exhaust** | Diaphragm failure, or diaphragm plates loose. | Replace diaphragms, check for damage and ensure diaphragm plates are tight. |
| | Diaphragm stretched around center hole or bolt holes. | Check for excessive inlet pressure or air pressure. Consult Chemical Resistance Chart for compatibility with products, cleaners, temperature limitations and lubrication. |
| **Premature Diaphragm Failure** | Cavitation. | Enlarge pipe diameter on suction side of pump. |
| | Excessive flooded suction pressure. | Move pump closer to product. Raise pump/place pump on top of tank to reduce inlet pressure. Install Back pressure device (Tech bulletin 41r). Add accumulation tank or pulsation dampener. |
| | Misapplication (chemical/physical incompatibility). | Consult Chemical Resistance Chart for compatibility with products, cleaners, temperature limitations and lubrication. |
| | Incorrect diaphragm plates or plates on backwards, installed incorrectly or worn. | Check Operating Manual to check for correct part and installation. Ensure outer plates have not been worn to a sharp edge. |
| **Unbalanced Cycling** | Excessive suction lift. | For lifts exceeding 20' of liquid, filling the chambers with liquid will prime the pump in most cases. |
| | Undersized suction line. | Meet or exceed pump connections. |
| | Pumped fluid in air exhaust muffler. | Disassemble pump chambers. Inspect for diaphragm rupture or loose diaphragm plate assembly. |
| | Suction side air leakage or air in product. | Visually inspect all suction-side gaskets and pipe connections. |
| | Check valve obstructed. | Disassemble the wet end of the pump and manually dislodge obstruction in the check valve pocket. |
| | Check valve and/or seat is worn or needs adjusting. | Inspect check valves and seats for wear and proper setting. Replace if necessary. |
| | Entrained air or vapor lock in chamber(s). | Purge chambers through tapped chamber vent plugs. |

***For additional troubleshooting tips contact After Sales Support at service.warrenrupp@idexcorp.com or 419-524-8388***

# Composite Repair Parts Drawing

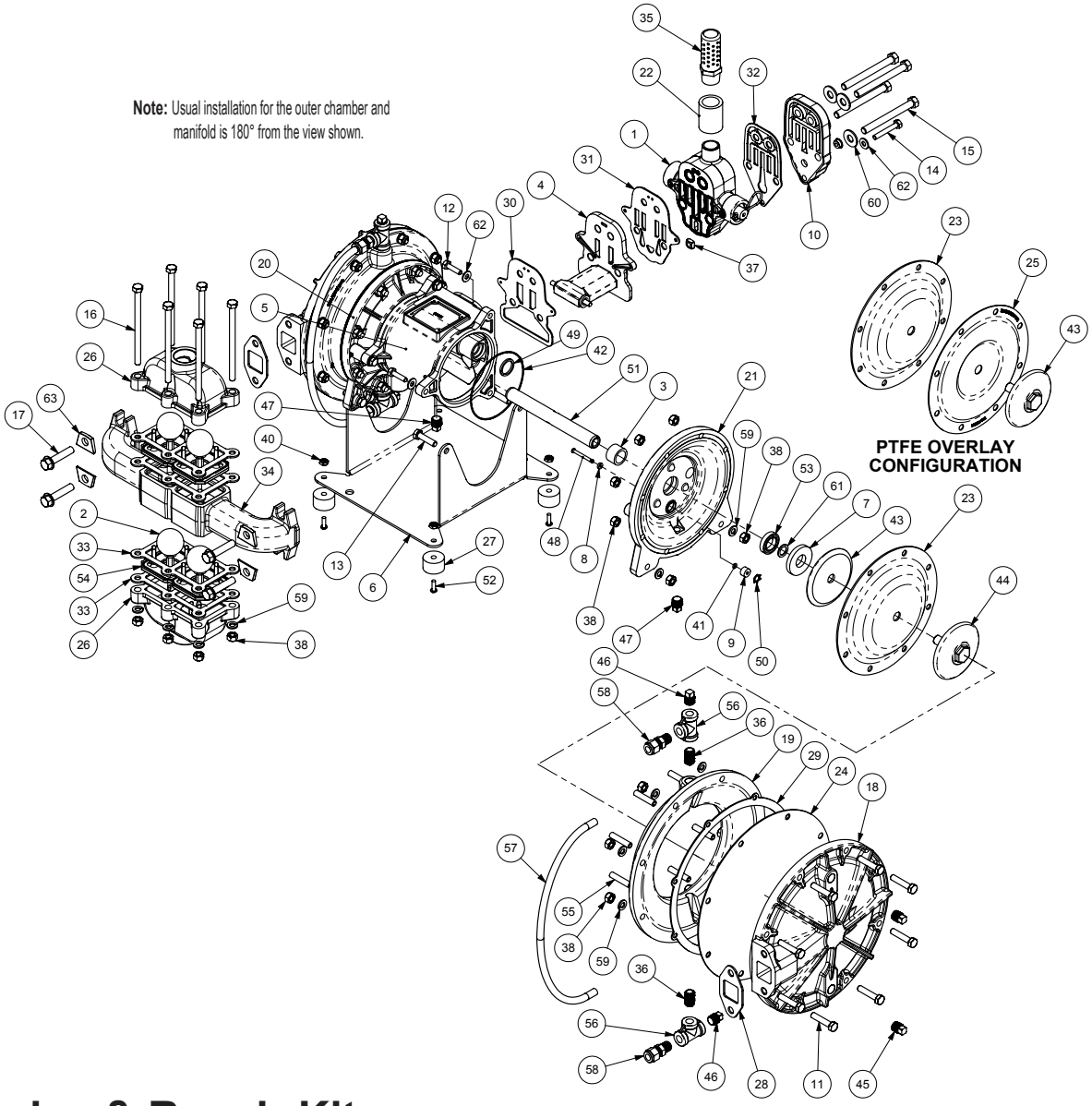




# Service & Repair Kits

**476.130.000** **AIR END KIT**
Sleeve and Spool Set, Seals, Gaskets, O-rings,Bumpers, Plunger Actuators, Plunger Bushings, Retaining Rings, and Pilot Valve Assembly

**476.317.000** **AIR END WEAR KIT**
Seals, Gaskets, O-rings, Grease Packet Bumpers, Plunger Actuators, Plunger Bushings and Retaining Rings

**476.310.635** **WET END KIT**
Neoprene Driver Diaphragms, PTFE Pumping Diaphragms, PTFE Check Balls, PTFE Gaskets, Copper Washers, and Neoprene Diaphragm Gaskets

**476.310.637** **WET END KIT**
FKM Driver Diaphragms, PTFE Pumping Diaphragms, PTFE Check Balls, PTFE Gaskets, Copper Washers, and FKM Diaphragm Gaskets

**476.310.640** **WET END KIT**
Neoprene Driver Diaphragms, PTFE Overlay Diaphragms, PTFE Pumping Diaphragms, PTFE Check Balls, PTFE Gaskets, Copper Washers, and FKM Diaphragm Gaskets

**IMPORTANT NOTE:** Polypropylene pumps are shipped with the 1/2" NPT Pipe Plug installed in the end ports of both suction and discharge one-piece manifolds. To convert to the Inline porting positions for pump installation and operation, first remove the pipe plugs and re-install in the center ports. Apply PTFE tape or pipe sealant to threads of the plug before installation.

# Composite Repair Parts List

| Item | Part Number | Description | Qty. |
|---|---|---|---|
| 1 | 031.111.557 | ASSEMBLY, AIR VALVE | 1 |
| 2 | 050.011.600 | BALL, CHECK | 4 |
| 3 | 070.012.170 | BEARING, SLEEVE | 2 |
| ④ | 095.074.001 | PILOT VALVE ASSEMBLY | 1 |
| 5 | 114.007.157 | INTERMEDIATE | 1 |
| 6 | 115.071.330 | BRACKET, MOUNTING | 1 |
| ⑦ | 132.019.357 | BUMPER | 2 |
| ⑧ | 132.022.360 | BUMPER, ACTUATOR | 2 |
| ⑨ | 135.034.506 | BUSHING, PLUNGER | 2 |
| 10 | 165.134.157 | CAP, AIR INLET, ASS'Y | 1 |
| 10.1 | 165.042.157 | CAP, AIR INLET | 1 |
| 10.2 | 559.017.506 | ORIFICE | 1 |
| 11 | 170.029.115 | CAPSCREW, HEX HD, 5/16-18 X 1.50 | 16 |
| 12 | 170.043.115 | CAPSCREW, HEX HD, 1/4-20 X 1.00 | 6 |
| 13 | 170.045.115 | CAPSCREW, HEX HEAD 5/16-18 X 1 1/4 | 4 |
| 14 | 170.063.330 | CAPSCREW, HEX HD, 1/4-20 X 1.75 | 1 |
| 15 | 170.033.115 | CAPSCREW, HEX HD, 3/8-16 UNC X 3.00 | 4 |
| 16 | 170.122.115 | CAPSCREW, HEX HD, 5/16-18 X 5.00 | 6 |
| 17 | 171.010.115 | CAPSCREW, FLANGE LOCK, 3/8-16 UNC X 1.75 | 4 |
| 18 | 196.021.110 | CHAMBER, OUTER | 2 |
| 18 | 196.021.112 | CHAMBER, OUTER | 2 |
| 19 | 196.023.156 | CHAMBER, CONTAINMENT | 2 |
| | 196.023.110 | CHAMBER, CONTAINMENT | 2 |
| | 196.023.112 | CHAMBER, CONTAINMENT | 2 |
| 20 | 196.042.157 | CHAMBER, INNER | 1 |
| 21 | 196.043.157 | CHAMBER, INNER | 1 |
| 22 | 255.012.335 | COUPLING, PIPE, 3/4 NPT | 1 |
| □ 23 | 286.008.363 | DIAPHRAGM | 2 |
| | 286.008.365 | DIAPHRAGM | 2 |
| □ 24 | 286.009.604 | DIAPHRAGM, PUMPING | 2 |
| □ 25 | 286.015.604 | DIAPHRAGM, OVERLAY | 2 |
| 26 | 334.013.110 | FLANGE, PORTING | 2 |
| | 334.013.112 | FLANGE, PORTING | 2 |
| | 334.013.157 | FLANGE, PORTING | 2 |
| | 334.013.110 E | FLANGE, PORTING - BSP TAPERED | 2 |
| | 334.013.112 E | FLANGE, PORTING - BSP TAPERED | 2 |
| | 334.013.157 E | FLANGE, PORTING - BSP TAPERED | 2 |
| 27 | 350.002.360 | FOOT, RUBBER | 4 |
| □ 28 | 360.030.600 | GASKET, MANIFOLD | 2 |
| □ 29 | 360.039.363 | GASKET, DIAPHRAGM | 2 |
| | 360.039.365 | GASKET, DIAPHRAGM | 2 |
| ⑳ | 360.056.379 | GASKET | 1 |
| ㉛ | 360.057.360 | GASKET | 1 |
| ㉜ | 360.058.360 | GASKET | 1 |
| □ 33 | 360.115.608 | GASKET, FLANGE | 4 |
| 34 | 518.020.110 | MANIFOLD | 1 |
| | 518.020.112 | MANIFOLD | 1 |
| 35 | 530.036.000 | MUFFLER | 1 |
| 36 | 538.083.110 | NIPPLE, PIPE, 1/4" NPT, CLOSE | 4 |
| 37 | 542.001.115 | NUT, SQUARE | 1 |
| 38 | 545.004.115 | NUT, HEX, 5/16-18 | 42 |
| 40 | 547.002.110 | NUT, STOP | 4 |
| ㊶ | 560.001.360 | O-RING | 2 |
| ㊷ | 560.040.360 | O-RING | 2 |
| 43 | 612.022.330 | PLATE, DIAPHRAGM, INNER | 2 |
| 44 | 612.101.110 | ASSEMBLY, DIAPHRAGM PLATE | 2 |
| | 612.101.112 | ASSEMBLY, DIAPHRAGM PLATE | 2 |
| | 612.108.157 | ASSEMBLY, DIAPHRAGM PLATE | 2 |
| 45 | 618.003.110 | PLUG, PIPE, 1/4 | 4 |
| | 618.003.112 | PLUG, PIPE, 1/4 | 4 |
| 46 | 618.003.110 | PLUG, PIPE, 1/4 | 4 |
| 47 | 618.003.330 | PLUG, PIPE, 1/4 | 3 |
| ㊽ | 620.007.114 | PLUNGER, ACTUATOR | 2 |
| ㊾ | 675.040.360 | RING, SEALING | 2 |
| ㊿ | 675.042.115 | RING, RETAINING | 2 |
| 51 | 685.039.120 | ROD, DIAPHRAGM | 1 |
| 52 | 706.013.330 | SCREW, MACHINE | 4 |
| □ 53 | 720.010.360 | SEAL, U-CUP | 2 |
| 54 | 722.102.110 | SEAT, CHECK VALVE | 2 |
| | 722.102.112 | SEAT, CHECK VALVE | 2 |
| 55 | 807.024.115 | STUD, 5/16-18 | 16 |
| 56 | 835.005.110 | TEE, PIPE, 1/4 NPT | 4 |
| 57 | 860.065.606 | TUBE | 2 |
| 58 | 866.060.110 | CONNECTOR, TUBE | 4 |
| 59 | 900.004.115 | WASHER, LOCK, 5/16 | 26 |
| 60 | 901.005.115 | WASHER, FLAT, 3/8 | 4 |
| □ 61 | 901.012.180 | WASHER, SEALING | 2 |
| 62 | 901.035.115 | WASHER, FLAT, 1/4 | 7 |
| 63 | 905.001.115 | WASHER, TAPER | 4 |

**LEGEND:**

◯ = Items contained within Air End Kits

□ = Items contianed within Wet End Kits

***Note:*** *Kits contain components specific to the material codes.*

# Material Codes - The Last 3 Digits of Part Number

000.....Assembly, sub-assembly;
and some purchased items
010.....Cast Iron
015.....Ductile Iron
020.....Ferritic Malleable Iron
080.....Carbon Steel, AISI B-1112
110.....Alloy Type 316 Stainless Steel
111.....Alloy Type 316 Stainless Steel
(Electro Polished)
112.....Alloy C
113.....Alloy Type 316 Stainless Steel
(Hand Polished)
114.....303 Stainless Steel
115.....302/304 Stainless Steel
117.....440-C Stainless Steel (Martensitic)
120.....416 Stainless Steel
(Wrought Martensitic)
148.....Hardcoat Anodized Aluminum
150.....6061-T6 Aluminum
152.....2024-T4 Aluminum (2023-T351)
155.....356-T6 Aluminum
156.....356-T6 Aluminum
157.....Die Cast Aluminum Alloy #380
158.....Aluminum Alloy SR-319
162.....Brass, Yellow, Screw Machine Stock
165.....Cast Bronze, 85-5-5-5
166.....Bronze, SAE 660
170.....Bronze, Bearing Type,
Oil Impregnated
180.....Copper Alloy
305.....Carbon Steel, Black Epoxy Coated
306.....Carbon Steel, Black PTFE Coated
307.....Aluminum, Black Epoxy Coated
308.....Stainless Steel, Black PTFE Coated
309.....Aluminum, Black PTFE Coated
313.....Aluminum, White Epoxy Coated
330.....Zinc Plated Steel
332.....Aluminum, Electroless Nickel Plated
333.....Carbon Steel, Electroless
Nickel Plated
335.....Galvanized Steel
337.....Silver Plated Steel
351.....Food Grade Santoprene®
353.....Geolast; Color: Black
354.....Injection Molded #203-40
Santoprene® Duro 40D +/-5;
Color: RED
356.....Hytrel®
357.....Injection Molded Polyurethane
358.....Urethane Rubber
(Some Applications)
(Compression Mold)
359.....Urethane Rubber
360.....Nitrile Rubber Color coded: RED
363.....FKM (Fluorocarbon)
Color coded: YELLOW
364.....EPDM Rubber
Color coded: BLUE
365.....Neoprene Rubber
Color coded: GREEN
366.....Food Grade Nitrile
368.....Food Grade EPDM
371.....Philthane (Tuftane)
374.....Carboxylated Nitrile
375.....Fluorinated Nitrile
378.....High Density Polypropylene
379.....Conductive Nitrile
408.....Cork and Neoprene
425.....Compressed Fibre
426.....Blue Gard
440.....Vegetable Fibre
500.....Delrin® 500
502.....Conductive Acetal, ESD-800
503.....Conductive Acetal, Glass-Filled
506.....Delrin® 150
520.....Injection Molded PVDF
Natural color
540.....Nylon
542.....Nylon
544.....Nylon Injection Molded
550.....Polyethylene
551.....Glass Filled Polypropylene
552.....Unfilled Polypropylene
555.....Polyvinyl Chloride
556.....Black Vinyl
557.....Conductive Carbon-filled Polypropylene
558.....Conductive HDPE
570.....Rulon II®
580.....Ryton®
600.....PTFE (virgin material)
Tetrafluorocarbon (TFE)
603.....Blue Gylon®
604.....PTFE
606.....PTFE
607.....Envelon
608.....Conductive PTFE
610.....PTFE Encapsulated Silicon
611.....PTFE Encapsulated FKM
632.....Neoprene/Hytrel®
633.....FKM/PTFE
634.....EPDM/PTFE
635.....Neoprene/PTFE
637.....PTFE, FKM/PTFE
638.....PTFE, Hytrel®/PTFE
639.....Nitrile/TFE
643.....Santoprene®/EPDM
644.....Santoprene®/PTFE
656.....Santoprene® Diaphragm and
Check Balls/EPDM Seats
661.....EPDM/Santoprene®
666.....FDA Nitrile Diaphragm,
PTFE Overlay, Balls, and Seals
668.....PTFE, FDA Santoprene®/PTFE

- Delrin and Hytrel are registered tradenames of E.I. DuPont.
- Nylatron is a registered tradename of Polymer Corp.
- Gylon is a registered tradename of Garlock, Inc.
- Santoprene is a registered tradename of Exxon Mobil Corp.
- Rulon II is a registered tradename of Dixion Industries Corp.
- Ryton is a registered tradename of Phillips Chemical Co.
- Valox is a registered tradename of General Electric Co.

## RECYCLING

Warren Rupp is an ISO14001 registered company and is committed to minimizing the impact our products have on the environment. Many components of SANDPIPER® AODD pumps are made of recyclable materials. We encourage pump users to recycle worn out parts and pumps whenever possible, after any hazardous pumped fluids are thoroughly flushed. Pump users that recycle will gain the satisfaction to know that their discarded part(s) or pump will not end up in a landfill. The recyclability of SANDPIPER products is a vital part of Warren Rupp's commitment to environmental stewardship.

# Air Distribution Valve Assembly
## With Cast Iron Center

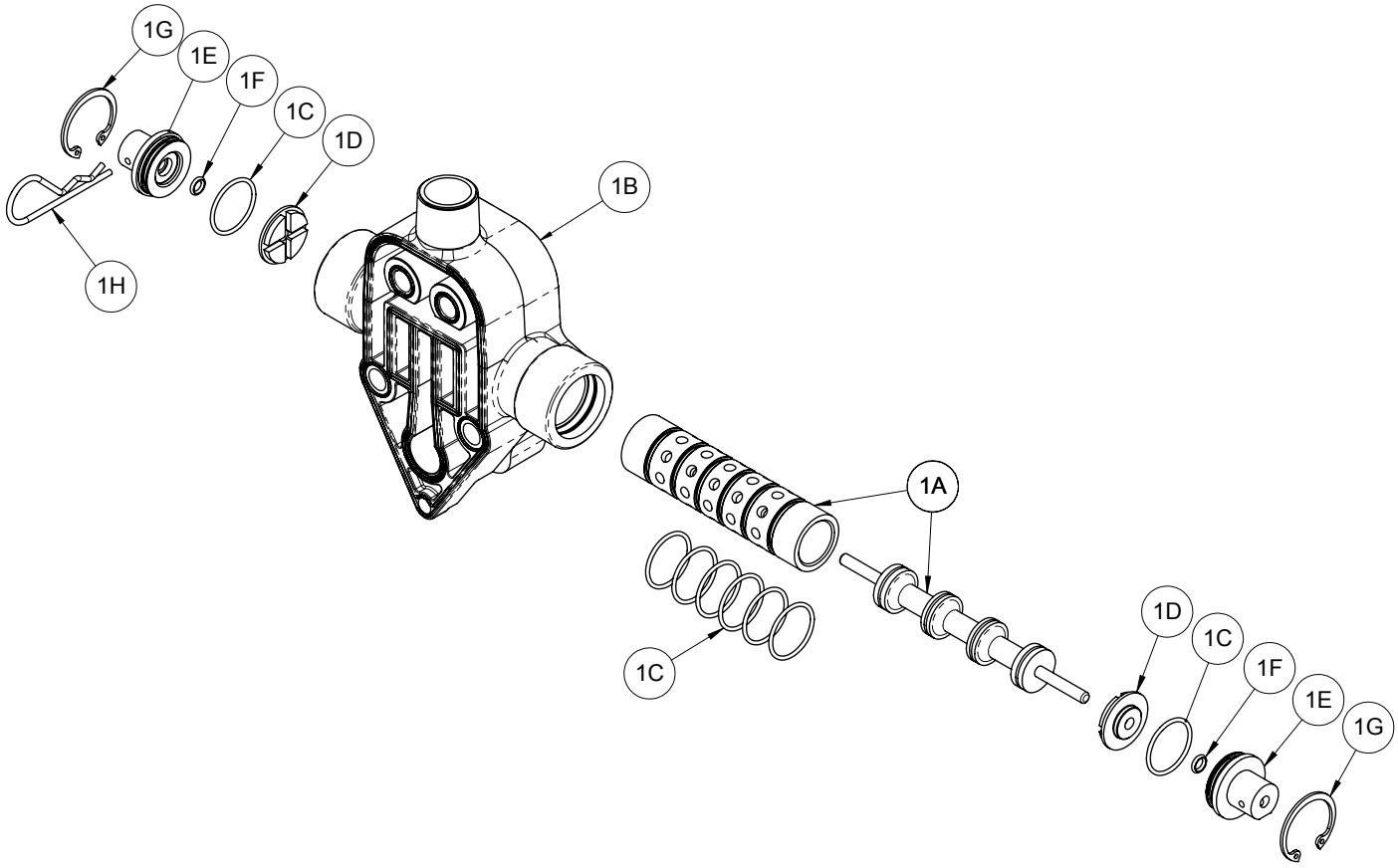




### Air Distribution Valve Servicing

See repair parts drawing above.

**Step 1:** Remove end cap retainer (1G).

**Step 2:** Remove end cap (1E), bumper (1D) and o-rings (1C and 1F).

**Step 3:** Remove spool part of (1A) (caution, do not scratch).

**Step 4:** Press sleeve (1A) from body (1B).

**Step 5:** Inspect O-Ring (1C) and replace if necessary.

**Step 6:** Lightly lubricate O-Rings (1D) on spool (1A).

**Step 7:** Press sleeve (1A) into body (1B).

**Step 8:** Reassemble in reverse order.

**Note:** Sleeve and spool (1A) set is match ground to a specified clearance sleeve and spools (1A) cannot be interchanged.

### Main Air Valve Assembly Parts List

| Item | Part Number | Description | Qty |
|---|---|---|---|
| 1 | 031.111.557 | Air Valve Assembly | 1 |
| ◯ 1.A | 031.083.000 | Sleeve and Spool Set with Pins | 1 |
| 1.B | 095.051.557 | Air Valve Body | 1 |
| ◯ 1.C | 560.058.360 | O-ring | 8 |
| 1.D | 132.028.552 | Bumper | 2 |
| 1.E | 165.078.147 | End Cap | 2 |
| ◯ 1.F | 560.029.360 | O-ring | 2 |
| ◯ 1.G | 675.043.115 | Retaining Ring | 2 |
| 1.H | 210.008.330 | Safety Clip | 1 |

**LEGEND:**

◯ = Items contained within Air End Kits

**⚠ IMPORTANT**



***Read these instructions completely, before installation and start-up. It is the responsibility of the purchaser to retain this manual for reference. Failure to comply with the recommendations stated in this manual will damage the pump, and void factory warranty.***

# Pilot Valve Assembly

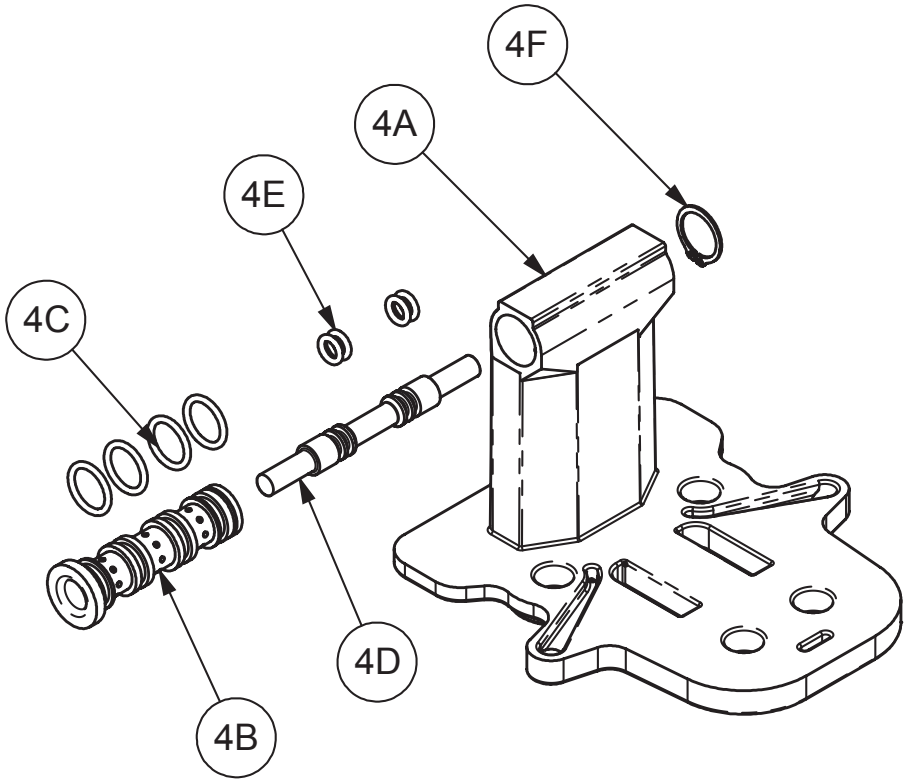




## Pilot Valve Servicing

With Pilot Valve removed from pump.

**Step 1:** Remove snap ring (4F).

**Step 2:** Remove sleeve (4B), inspect O-Rings (4C), replace if required.

**Step 3:** Remove spool (4D) from sleeve (4B), inspect O-Rings (4E), replace if required.

**Step 4:** Lightly lubricate O-Rings (4C) and (4E).

Reassemble in reverse order.

### PILOT VALVE ASSEMBLY PARTS LIST

| Item | Part Number | Description | Qty |
|---|---|---|---|
| (4) | 095.074.001 | Pilot Valve Assembly | 1 |
| 4A | 095.071.557 | Pilot Valve Body | 1 |
| 4B | 755.025.162 | Pilot Valve sleeve | 1 |
| 4C | 560.033.360 | O-Ring | 4 |
| 4D | 775.014.115 | Pilot Valve Spool | 1 |
| 4E | 560.023.360 | O-Ring | 4 |
| 4F | 675.037.080 | Retaining Ring | 1 |

**LEGEND:**

◯ = Items contained within Air End Kits

# 5 - YEAR Limited Product Warranty

*Warren Rupp, Inc. ("Warren Rupp") warrants to the original end-use purchaser that no product sold by Warren Rupp that bears a Warren Rupp brand shall fail under normal use and service due to a defect in material or workmanship within five years from the date of shipment from Warren Rupp's factory. Warren Rupp brands include Warren Rupp®,SANDPIPER®, SANDPIPER Signature Series™, MARATHON®, Porta-Pump®, SludgeMaster™ and Tranquilizer®.*

*The use of non-OEM replacement parts will void (or negate) agency certifications, including CE, ATEX, CSA, 3A and EC1935 compliance (Food Contact Materials). Warren Rupp, Inc. cannot ensure nor warrant non-OEM parts to meet the stringent requirements of the certifying agencies.*

*~ See complete warranty at https://www.sandpiperpump.com/*

SANDPIPER®

## EC Declaration of Conformity

**Manufacturer:**
**Warren Rupp, Inc.**
**800 N. Main Street**
**Mansfield, Ohio, 44902 USA**

Certifies that Air-Operated Double Diaphragm Pump Models: DSB Series, DMF Series, G Series, HDB Series, HDF Series, HP Series, F Series, MS Series, S Series, SL Series, SP Series, SSB Series, T Series, U1F Series, WR Series; High Pressure Pump Models: EH Series, GH Series, SH Series; Submersible Pump Models: SMA3 Series, SPA Series; and Surge Dampener/ Suppressor Models: DA Series, TA Series comply with the European Community Directive 2006/42/EC on Machinery, according to Annex VIII. This product has used Harmonized Standard EN809:2012, Pumps and Pump Units for Liquids - Common Safety Requirements, to verify conformance.

October 3, 2022
DATE/APPROVAL/TITLE:

Technical File on record with:
DEKRA Certification B.V.
Meander 1051
6825 MJ Arnhem
The Netherlands

Signature of authorized person

Dennis Hall
Printed name of authorized person

Engineering Manager
Title

IDEX

CE

SANDPIPER®

# EC Declaration of Conformity

**Manufacturer:**
**Warren Rupp, Inc.**
**800 N. Main Street**
**Mansfield, Ohio, 44902 USA**

Certifies that Air-Operated Double Diaphragm Pump Models: DSB Series, DMF Series, G Series, HDB Series, HDF Series, HP Series, F Series, MS Series, S Series, SL Series, SP Series, SSB Series, T Series, U1F Series, WR Series; High Pressure Pump Models: EH Series, GH Series, SH Series; Submersible Pump Models: SMA3 Series, SPA Series; and Surge Dampener/ Suppressor Models: DA Series, TA Series comply with the United Kingdom Statutory Instruments 2008 No. 1597, The Supply of Machinery (Safety) Regulations 2008, according to Annex VIII. This product has used Designated Standard EN809:2012, Pumps and Pump Units for Liquids - Common Safety Requirements, to verify conformance.

October 17, 2022
DATE/APPROVAL/TITLE:

Technical File on record with:
DEKRA Certification UK Limited
Stokenchurch House
Oxford Road
Stokenchurch
HP14 3SX

Signature of authorized person

Dennis Hall
Printed name of authorized person

Engineering Manager
Title

IDEX

UK CA

SANDPIPER®

# ATEX

IDEX

# EU Declaration of Conformity

**Manufacturer:**
Warren Rupp, Inc.
A Unit of IDEX Corporation
800 North Main Street
Mansfield, OH 44902 USA

This declaration of conformity is issued under the sole responsibility of the manufacturer. Warren Rupp, Inc. declares that Air Operated Double Diaphragm Pumps (AODD) and Surge Suppressors listed below comply with the requirements of Directive **2014/34/EU** and applicable harmonized standards.

Harmonized Standards:
- EN ISO 80079-36: 2016
- EN ISO 80079-37: 2016
- EN 60079-25: 2010

1. AODD Pumps and Surge Suppressors - Technical File on record with: DEKRA Certification B.V.
Meander 1051
6825 MJ Arnhem
The Netherlands

Hazardous Location Applied:



II 2 G Ex h IIC T5...225°C (T2) Gb
II 2 D Ex h IIIC T100°C...T200°C Db
- Metallic pump models with external aluminum components (DMF Series, EH Series, F Series, G & GH Series, HDB Series, HDF Series, MS Series, S Series, SH Series, SL Series, SPB Series, ST Series, T Series, and U1F Series)
- Conductive plastic pump models with integral muffler (PB1/4 Series, S Series, SL Series, SPE Series)
- Tranquilizer® surge suppressors (TA Series)



II 2 G Ex h IIB T5...225°C (T2) Gb
II 2 D Ex h IIIB T100°C...T200°C Db
- ST Series with sight tubes (VL) and HP Series because of the projected area of non-conductive external components

2. AODD Pumps - EU Type Examination Certificate No.: DEKRA 18ATEX0094X - DEKRA Certification B.V. (0344)
Meander 1051
6825 MJ Arnhem
The Netherlands

Hazardous Location Applied:



I M1 Ex h I Ma
II 1 G Ex h IIC T5...225°C (T2) Ga
II 1 D Ex h IIIC T100°C...T200°C Da
- Metallic pump models with no external aluminum (HDB Series, HDF Series, G Series, S Series, SPB Series)
- Conductive plastic pumps equipped with conductive muffler (S Series, SPE Series)



II 2 G Ex h ia IIC T5 Gb
II 2 D Ex h ia IIIC T100°C Db
- Pump models with ATEX rated pulse output kit option (HDB Series, HDF Series, PB1/4, S Series, SB Series)



II 2 G Ex h mb IIC T5 Gb
II 2 D Ex h mb tb IIIC T100° Db
- Pump model series S05, S1F, S15, S20, S30 equipped with ATEX rated integral solenoid option

➢ See “ATEX Details” page in user’s manual for more information
➢ See “Safety Information” page for conditions of safe use

DATE/APPROVAL/TITLE:
9 NOV 2023

Dennis Hall
Engineering Manager

B

SANDPIPER®

# UKEx

IDEX

# EU Declaration of Conformity

**Manufacturer:**

Warren Rupp, Inc.
A Unit of IDEX Corporation
800 North Main Street
Mansfield, OH 44902 USA

This declaration of conformity is issued under the sole responsibility of the manufacturer.
Warren Rupp, Inc declares that Air Operated Double Diaphragm Pumps (AODD) and Surge Suppressors listed below comply with the requirements of United Kingdom Statutory Instruments **2016 No. 1107** and all the applicable standards.

Designated Standards:

- EN ISO 80079-36: 2016
- EN ISO 80079-37: 2016
- EN 60079-25: 2010

1. AODD Pumps and Surge Suppressors - Technical File on record with: DEKRA Certification UK Limited
Stokenchurch House
Oxford Road
Stokenchurch
HP14 3SX

Hazardous Location Applied:



II 2 G Ex h IIC T5...225°C (T2) Gb
II 2 D Ex h IIIC T100°C...T200°C Db

- Metallic pump models with external aluminum components (DMF Series, EH Series, F Series, G & GH Series, HDB Series, HDF Series, MS Series, S Series, SH Series, SL Series, SPB Series, ST Series, T Series, and U1F Series)
- Conductive plastic pump models with integral muffler (PB1/4 Series, S Series, SL Series, SPE Series)
- Tranquilizer® surge suppressors (TA Series)



II 2 G Ex h IIB T5...225°C (T2) Gb
II 2 D Ex h IIIB T100°C...T200°C Db

- ST Series with sight tubes (VL) and HP Series because of the projected area of non-conductive external components



➢ See “ATEX Details” page in user’s manual for more information
➢ See “Safety Information” page for conditions of safe use

DATE/APPROVAL/TITLE:
9 NOV 2023

Dennis Hall
Engineering Manager