ECON FP SERIES SPECIFICATIONS

STENNER PUMPS



Shipping Weight 4 lbs (1.7 kg)

C USA
THIS PUMP IS TESTED AND CERTIFIED BY WQA ACCORDING TO ANSI/NSF 61 FOR CONTACT WITH SODIUM HYPOCHLORITE AND WATER ONLY AND ANSI/NSF 372.

Listings vary by model

c UL us LISTED METERING PUMP 96F0

IP44

CE

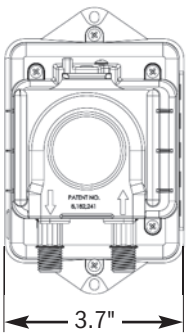

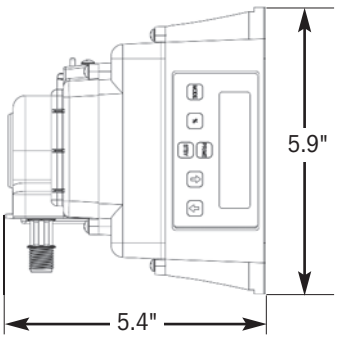

FEATURES

- Activated by a softener valve, water meter, flow switch or other flow activated equipment
- Accepts dry contact or 12-24 VAC/VDC signal
- Enclosed housing
- Self-priming, does not lose prime or vapor lock
- Pumps off-gassing solutions and can run dry
- 3-point roller design assists with anti-siphon
- Tube replacement without tools
- Output reproducibility

SPECIFICATIONS

Flow Rate Output Control Six button control panel with LCD display
Reproducibility ±2%
Maximum Working Pressure 80 psi (5.5 bar)
Maximum Operating Temperature 104°F (40°C)
Maximum Suction Lift 25 ft (7.6 m) vertical lift, based on water
Motor Type 240VDC, brushless
Shaft RPM (average maximum) 60
Duty Cycle Continuous
Motor Voltage 120V 60Hz (0.25A), 230V 60Hz (0.17A), 230V 50Hz (10W), 24VDC (0.85A)
Power Cord Type 120V 60Hz, 230V 60Hz: SJTOW, 240V 50Hz: H05RN-F, 24VDC pigtail
Power Cord Plug End 120V 60Hz NEMA 5-15P, 230V 60Hz NEMA 6-15P, 230V 50Hz CEE7/7, 24VDC pigtail
Power Cord Length 6 ft (1.8 m), 10 ft (3.05 m) or 24VDC Pigtail 1 ft (30.5 cm)
Classification Indoor/outdoor

MATERIALS OF CONSTRUCTION

All Housings Polycarbonate
Pump Tube & Check Valve Duckbill Santoprene®* (FDA approved)
Pump Head Rollers Polyethylene
Suction/Discharge Tubing, Ferrules Polyethylene (FDA approved)
Tube and Injection Fittings PVC or Polypropylene (both NSF listed)
Connecting Nuts PVC (NSF listed)
Suction Line Strainer and Cap PVC or Polypropylene (both NSF listed); ceramic weight
All Fasteners Stainless steel

ACCESSORIES

3 Connecting nuts 1/4"
3 Ferrules 1/4" or 6 mm *Europe*
1 Duckbill check valve
1 Weighted suction line strainer 1/4" or 6 mm *Europe*
1 20' Roll suction/discharge tubing 1/4" white or UV black OR 6 mm White *Europe*
1 Additional pump tube
1 Manual

* Santoprene® is a trademark of Exxon Mobil Corporation.

FLOW RATE OUTPUT CHART

80 psi (5.5 bar) maximum

Item Number Prefix	Pump Tube	Roller Assembly	Turndown Ratio	Gallons per Day	Gallons per Hour	Ounces per Hour	Ounces per Minute	Liters per Day	Liters per Hour	Milliliters per Hour	Milliliters per Minute
E10PLM	M	White	10:1	0.49	0.02	2.6	0.04	1.84	0.08	76.7	1.3
E10PHM	M	White	10:1	0.83	0.03	4.4	0.07	3.14	0.13	130.8	2.2
E20PHM	M	White	10:1	1.41	0.06	7.5	0.13	5.36	0.22	223.2	3.7
E20PHF	F	White	10:1	4.5	0.19	24.0	0.40	17.01	0.71	708.8	11.8
E20PHG	G	Black	10:1	16.0	0.67	85.3	1.42	60.48	2.52	2520.0	42.0
E20PHH	H	Black	10:1	30.0	1.25	160.0	2.67	113.40	4.73	4725.0	78.8
				Approximate Maximum Output @ 50/60Hz							

NOTICE: The information within this chart is solely intended for use as a guide. The output data is an approximation based on pumping water under a controlled testing environment. Many variables can affect the output of the pump. Stenner Pump Company recommends that all metering pumps undergo field calibration by means of analytical testing to confirm their outputs.

This information is not intended for specific application purposes. Stenner Pump Company reserves the right to make changes to prices, products, and specifications at any time without prior notice.

© Stenner Pump Company All Rights Reserved