# ECON FX SERIES SPECIFICATIONS

STENNER PUMPS



**Shipping Weight** 3 lbs (1.4 kg)

c UL us LISTED METERING PUMP 41TF1

IP44

CE

Listings vary by model

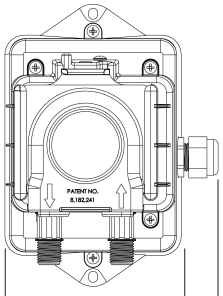


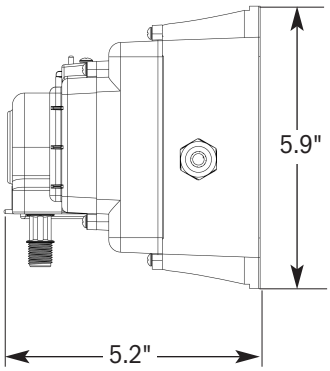


## FEATURES

- Fixed flow rate output
- Enclosed housing
- Self-priming, does not lose prime or vapor lock
- Pumps off-gassing solutions and can run dry
- 3-point roller design assists with anti-siphon
- Tube replacement without tools
- Output reproducibility
- Tube lubrication not required

## SPECIFICATIONS

**Output Control** Fixed speed, no adjustment
**Reproducibility** ±5%
**Maximum Working Pressure** 80 psi (5.5 bar), 25 psi (1.7 bar)
**Maximum Operating Temperature** 104°F (40°C)
**Maximum Suction Lift** 25 ft (7.6 m) vertical lift, based on water
**Motor Type** 24VDC, brushed
**Shaft RPM (average maximum)** 26, 44
**Duty Cycle** Continuous
**Maximum Viscosity** 100 Centipoise
**Motor Voltage** 120V 60Hz (0.25A), 230V 60Hz (0.17A), 230V 50Hz (10W), 24VDC (0.5A)
**Power Cord Type** 120V 60Hz, 230V 60Hz: SJTOW, 230V 50Hz: H05RN-F, 24VDC pigtail
**Power Cord Plug End** 120V 60Hz NEMA 5-15P, 230V 60Hz NEMA 6-15P, 230V 50Hz CEE7/7, 24VDC pigtail
**Power Cord Length** 6 ft (1.8 m) or 24VDC Pigtail 1 ft (30.5 cm)
**Classification** Indoor & outdoor

## MATERIALS OF CONSTRUCTION

**All Housings** Polycarbonate
**Pump Tube & Check Valve Duckbill** Santoprene®* (FDA approved)
**Pump Head Rollers** Polyethylene
**Suction/Discharge Tubing, Ferrules** Polyethylene (FDA approved)
**Tube and Injection Fittings** PVC or Polypropylene (both NSF listed)
**Connecting Nuts** PVC or Polypropylene (both NSF listed)
**Suction Line Strainer and Cap**
PVC or Polypropylene (both NSF listed); ceramic weight
**All Fasteners** Stainless steel

## ACCESSORIES

3 Connecting nuts 1/4"
3 Ferrules 1/4"
1 Duckbill check valve
1 Weighted suction line strainer 1/4"
1 20' Roll suction/discharge tubing 1/4" white
OR 6 mm White *Europe*
1 Additional pump tube
1 Manual

* Santoprene® is a registered trademark of Exxon Mobil Corporation.

## FLOW RATE OUTPUTS

| Item Number Prefix | Pressure Max. psi | Pump Tube | Roller Assembly | Gallons per Day | Gallons per Hour | Ounces per Hour | Ounces per Minute | Liters per Day | Liters per Hour | Milliliters per Hour | Milliliters per Minute | Pressure Max. bars |
|---|---|---|---|---|---|---|---|---|---|---|---|---|
| **E10FXA** | 25 | A | White | 7.4 | 0.31 | 39.5 | 0.66 | 28.0 | 1.17 | 1166.7 | 19.44 | 1.7 |
| **E10FXB** | 25 | B | White | 14.0 | 0.58 | 74.7 | 1.24 | 52.9 | 2.20 | 2204.2 | 36.74 | 1.7 |
| **E20FXB** | 25 | B | White | 24.8 | 1.03 | 132.3 | 2.20 | 93.7 | 3.90 | 3904.2 | 65.07 | 1.7 |
| **E20FXC** | 25 | C | White | 38.8 | 1.62 | 206.9 | 3.45 | 146.7 | 6.11 | 6112.5 | 101.88 | 1.7 |
| **E10FXH** | 80 | H | Black | 14.0 | 0.58 | 74.7 | 1.24 | 52.9 | 2.20 | 2204.2 | 36.74 | 5.5 |
| **E20FXH** | 80 | H | Black | 23.5 | 0.98 | 125.3 | 2.09 | 88.8 | 3.70 | 3700.0 | 61.67 | 5.5 |

Approximate Outputs @ 50/60Hz

**NOTICE:** The information within this chart is solely intended for use as a guide. The output data is an approximation based on pumping water under a controlled testing environment. Many variables can affect the output of the pump. Stenner Pump Company recommends that all metering pumps undergo field calibration by means of analytical testing-confirm their outputs.

This information is not intended for specific application purposes. Stenner Pump Company reserves the right to make changes to prices, products, and specifications at any time without prior notice.



© Stenner Pump Company All Rights Reserved