Switch-Pak™

w/ Compact Relay Controller

FLOWLINE™
LEVEL BEST

AU13, AV13 & AZ13 Series
Owner's Manual

CALL TOLL FREE 877-742-2878 FOR SALES AND SUPPORT. CLICK HERE TO RETURN TO WEBSITE



Specifications

Length:	6" to 10' (15 cm to 3m)
Switch points:	1 (set by factory)
Orientation:	± 20˚ vertical
Supply voltage:	120/240 VAC @ 50-60 Hz.
Contact type:	(1) SPDT relay
Contact rating:	250 VAC @ 16A
Contact delay:	0-60 seconds
LED indication:	Power, relay and sensor status
Strobe type:	_21_: Xenon tube _22_: N/A
Strobe flash:	_21_: 1 per second _22_: N/A
Process temp.:	F: -40˚ to 176˚ C: -40˚ to 80˚
Electronics temp.:	F: -40˚ to 140˚ C: -40˚ to 60˚
Pressure:	AU13: 150 psi (10 bar) AZ13: 150 psi (10 bar) AV13: 25 psi (1.7 bar)
Wetted material:	42__: PP 52__: PVDF Kynar®
Process mount:	_2_3: 2" NPT _2_7: 1 1/2” G
Enclosure rating:	NEMA 4X (IP65)
Installed height:	_21_: 6.5" (16.5 cm) _22_: 4.9" (12.4 cm)
Encl. material:	_21_: PP, UL94VO and polycarbonate _22_: PP, UL94VO
Conduit entrance:	Single, 1/2" NPT
Classification:	General purpose
CE compliance:	EN 50082-2 immunity EN 55011 emission EN 61010-1 safety

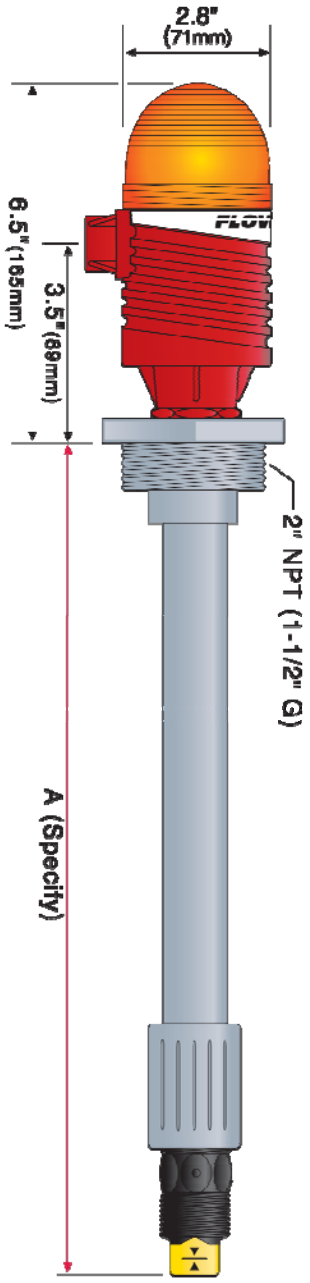

SENSOR TECHNOLOGIES:



Vibration (LZ12 series)
Typically applied in wastewater media| with light coating and/or foaming characteristics



Ultrasonic (LU10 series)
Broadly applied in chemical, solvent, hydrocarbon and light weight oil media



Buoyancy (LV10 series)
Best applied in clean water or water-like chemical media that is non-coating or scaling

STANDARD CONFIGURATION:
(AU13-_22_, AV13-_21_ or AZ13-_21_)

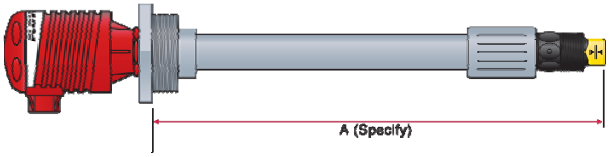

Ultrasonic	Buoyancy	Vibration
AU13-4223 1 x LU10-1305 1 x LM45-1001 1 x LC10-1001	**AV13-4223** 1 x LV10-1301 1 x LM45-1001 1 x LC10-1001	**AZ13-4223** **1 x LZ12-1405** 1 x LM45-1001 1 x LC10-1001
AU13-4227 1 x LU10-1325 1 x LM45-1061 1 x LC10-1051	**AV13-4227** 1 x LV10-1351 1 x LM45-1061 1 x LC10-1051	**AZ13-4227** 1 x LZ12-1425 1 x LM45-1061 1 x LC10-1051
AU13-5223 1 x LU10-2305 1 x LM45-5001 1 x LC10-1001	**AV13-5223** 1 x LV10-5301 1 x LM45-5001 1 x LC10-1001	
AU13-5227 1 x LU10-2325 1 x LM45-5061 1 x LC10-1051	**AV13-5227** 1 x LV10-5351 1 x LM45-5061 1 x LC10-1051	

STROBE ALERT CONFIGURATION:
(AU23-432_, AV23-432_ or AZ23-432

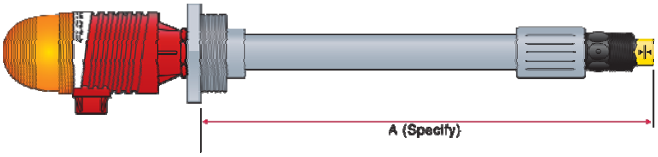

Ultrasonic	Buoyancy	Vibration
AU13-4213 1 x LU10-1305 1 x LM45-1001 1 x LC10-1002	**AV13-4213** 1 x LV10-1301 1 x LM45-1001 1 x LC10-1002	**AZ13-4213** 1 x LZ12-1405 1 x LM45-1001 1 x LC10-1002
AU13-4217 1 x LU10-1325 1 x LM45-1061 1 x LC10-1052	**AV13-4217** 1 x LV10-1351 1 x LM45-1061 1 x LC10-1052	**AZ13-4217** 1 x LZ12-1425 1 x LM45-1061 1 x LC10-1052
AU13-5213 1 x LU10-2305 1 x LM45-5001 1 x LC10-1002	**AV13-5213** 1 x LV10-5301 1 x LM45-5001 1 x LC10-1002	
AU13-5217 1 x LU10-2325 1 x LM45-5061 1 x LC10-1052	**AV13-5217** 1 x LV10-5351 1 x LM45-5061 1 x LC10-1052	

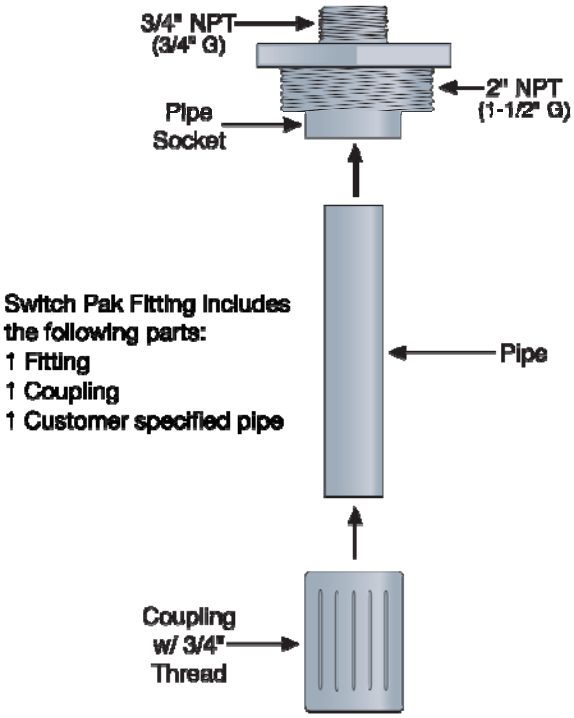

Switch Pak Fitting
P/N: LM45-1001, LM45-1061,
LM45-5001 or LM45-5061



Compact Relay Controller
P/N: LC10-1001, LC10-1051,
LC10-1002 or LC10-1052



Switch-Tek Level Switch
P/N: LU10-1305. LU10-1325, LU10-2305,
LU10-2325, LV10-1301, LV10-1351, LV10-5301,
LV10-5351, or LZ12-1405

- **About this Manual:** PLEASE READ THE ENTIRE MANUAL PRIOR TO INSTALLING OR USING THIS PRODUCT. This manual includes information on the Switch-Pak™ with Compact Relay Controller: AU13-_2__, AZ13-_2__ and AV13-_2__. The units are identical except for the material of construction, choice of Strobe Alert and the sensors technology.

- **User's Responsibility for Safety:** Flowline manufactures a wide range of liquid level sensors, controllers, and mounting systems. It is the user's responsibility to select components that are appropriate for the application, install them properly, perform tests of the installed system, and maintain all components. The failure to do so could result in property damage or serious injury.

- **Proper Installation and Handling:** Use a proper sealant with all installations. Never over-tighten the components. Always check for leaks prior to system start-up.

- **Material Compatibility:**

  - Polypropylene (PP, a polyolefin): Sensor, Switch-Pak™ fitting, Controller Housing.
  - Polyvinylidene Fluoride (PVDF): Sensor and Switch-Pak™ fitting.
  - Viton (a fluorocarbon): O-ring.

- Make sure that the application liquids are compatible with the materials that will be wetted. To determine the chemical compatibility between the components and its application liquids, refer to the Compass Corrosion Guide, available from Compass Publications.

- **Temperature and Pressure:** Switch-Pak™ is designed for use in application temperatures up to 80° C (176° F). The Vibration and Ultrasonic packages are designed for pressurized applications up to 150 psi (10 bar) and the Buoyancy package is designed for use up to 25 psi (1.7 bar).

- **Wiring and Electrical:** Electrical wiring of any liquid level control system should be performed in accordance with all applicable national, state, and local codes. Take care not to cut or break the outer insulation jacket of wiring that may be immersed while routing cables in the Switch-Pak™ system. Such breaks of the liquid seal of the sensor system may lead to component failure.

- **Flammable, Explosive and Hazardous Applications:** The AU13-_2__, AV13-_2__ and AZ13-_2__ Switch-Pak™ should not be used within classified hazardous environments.

- **Make a Fail-Safe System:** Design a fail-safe system that accommodates the possibility of system or power failure. In critical applications, Flowline recommends the use of redundant backup systems and alarms in addition to the primary system.

About Switch Pak™: Flowline's Switch-Pak™ with Compact Relay Controller Assembly is an single-point mounting system for installing one level sensor vertically within a tank. The compact relay controller features a 120/240 VAC controller with a 250 VAC, 10A SPDT relay contract. Switch-Pak™ mounts vertically through a standard 2" NPT (1 1/2" G) tank adapter, or on a side mount bracket (such as the LM50-1001).

Relay Controller: The level switch is pre-wired before shipment to the 2-pole terminal strip [Input 1 (+) & (-)]. The switch technologies used to indicate level are either Ultrasonic, Buoyancy or Vibration. The Compact Relay Controller provides a 1/2" Conduit connection and 6 poles for wire termination of power and relay contact. Use the AC, AC and GND terminals for providing power. Use the NC, NC and COM terminals for interfacing to the relay contact.



Compact Relay Controller (inside shown)

VIBRATION (LZ12-1405) WIRE CONFIGURATION:

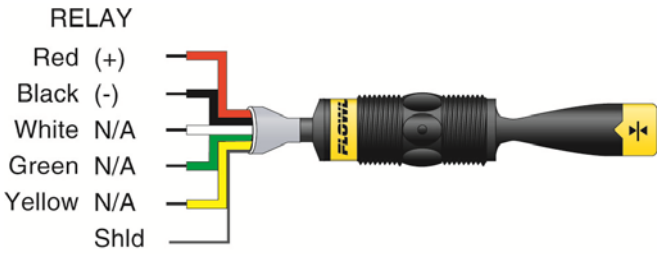

ULTRASONIC (LU10-_305 OR LU10-_325) WIRE CONFIGURATION

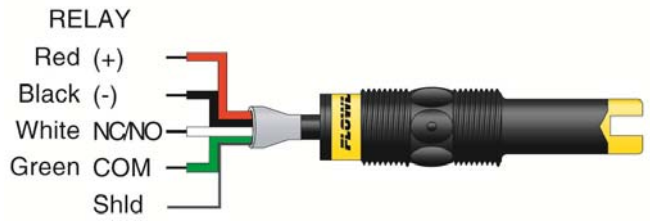

BUOYANCY (LV10-_301 OR LV10-_351) WIRE CONFIGURATION:

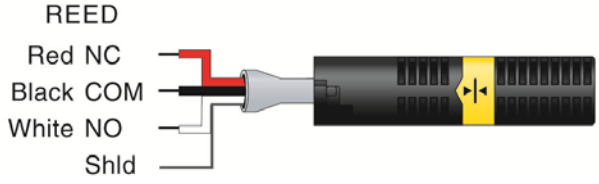

SWITCH-PAK™, IN-TANK INSTALLATION:

Flowline's Switch-Pak™ mounting system is an in-tank fitting, which enables users to install any technology, along the entire length of track. Switch-Pak™ may be installed thru the top wall of any tank or flange, using a standard 2" NPT tank adapter or blind flange. If tank top is not available, Flowline's side mount bracket, LM50-1001, enables Switch-Pak™ to be installed directly to the side wall or lip of the tank.

TANK ADAPTER:

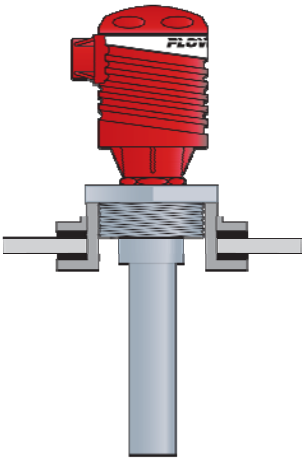

FLANGE MOUNTING:

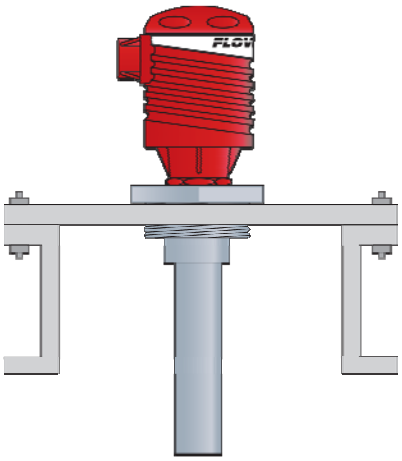

SIDE MOUNT BRACKET:

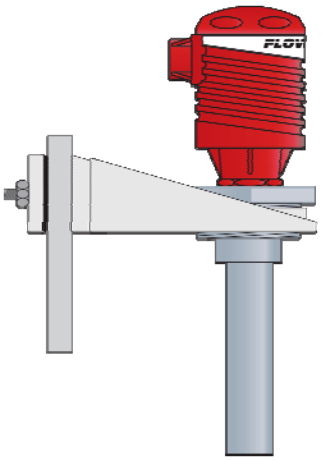

LIP OF TANK

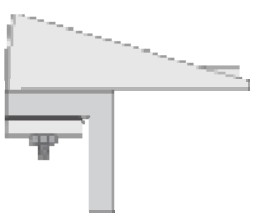

SIDE-WALL

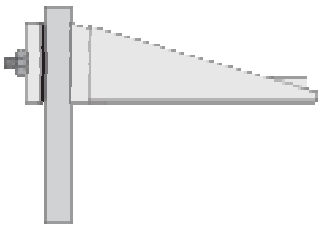

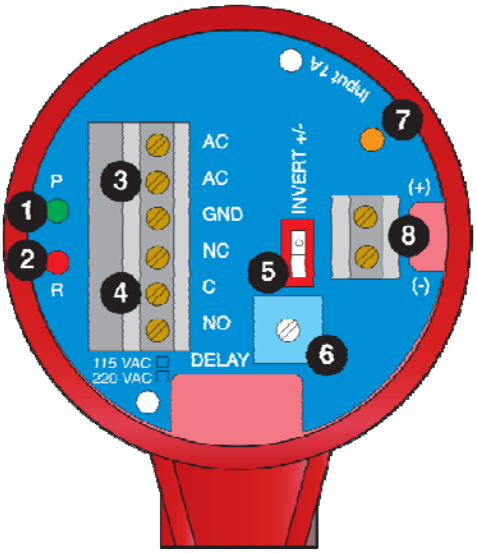

1. **Power indicator:** This green LED lights when AC power is ON.

2. **Relay indicator:** This red LED will light whenever the controller energizes the relay, in response to the proper condition at the sensor inputs and after the time delay.

3. **AC Power terminals:** Connection of 120 VAC power to the controller. The setting may be changed to 240 VAC if desired. This requires changing internal jumpers; this is covered in the Installation section of the LC10/11 Series Manual. Polarity (neutral and hot) does not matter.

4. **Relay terminals (NC, C, NO):** Connect the device you wish to control (pump, alarm etc.) to these terminals: supply to the COM terminal, and the device to the NO or NC terminal as required. The switched device should be a noninductive load of not more than 10 amps; for reactive loads the current must be derated or protection circuits used. When the red LED is ON and the relay is in the energized state, the NO terminal will be closed and the NC terminal will be open.

5. **Invert switch:** This DIP switch reverses the logic of the relay control in response to the sensor(s): conditions that used to energize the relay will make it turn off and vice versa.

6. **Time Delay:** After the input(s) change(s) state, this control sets a delay from 0.15 to 60 seconds before the relay will respond.

7. **Input 1A indicator:** These amber LED will light immediately whenever the appropriate sensor attached to the terminals detects liquid, and will turn off when it is dry.

8. **Input terminals:** Connect the wiring from the sensors to these terminals. Note the polarity: (+) is a 13.5 VDC, 27 mA power supply, and (-) is the return path from the sensor. If polarity is reversed, the sensors will not work.

VAC Power Input Wiring: Observe the labeling on the controller. Note: Polarity does not matter with the AC input terminal.

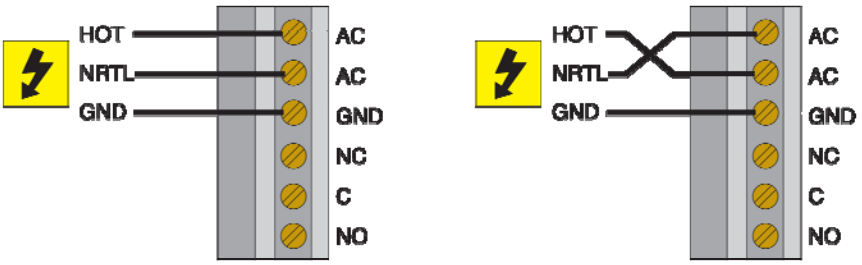

Relay Input Wiring: The relay is a single pole, double throw type rated at 250 Volts AC, 10 Amps. The terminals Normally Open (NO) and Normally Closed (NC) will be used in different applications. Remember that the "normal" state is when the relay coil is de-energized and the Red relay LED is OFF (de-energized).

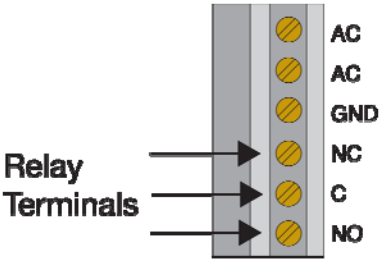

A typical application for the Switch-Pak™ with Compact Relay Controller is to operate a pump or valve between the two set points (automatic fill or empty). In this application, a pump or valve can be wired to either the Normally Open (NO) or Normally Closed (NC) side of the relay.

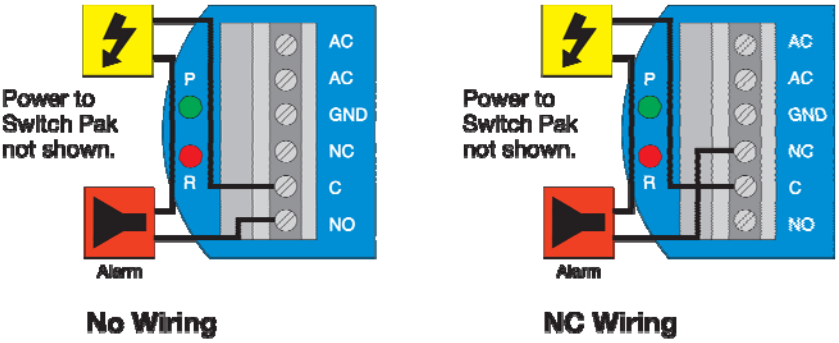

Strobe Alert Output

With the Strobe Alert wired NO, the strobe will flash when the Red LED is ON (Invert OFF). The strobe will flash when the Red LED is OFF when wired NC or by turning the Invert ON. If the strobe is wired NC and the Invert is ON, the strobe will flash when the Red LED is ON (same as NO wiring and Invert OFF).

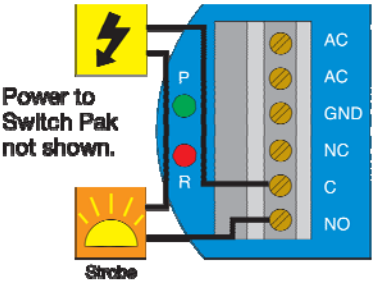

GENERAL:

The Switch-Pak™ with Compact Relay Controller requires no periodic maintenance except cleaning as required. It is the responsibility of the user to determine the appropriate maintenance schedule, based on the specific characteristics of the application liquids.

CLEANING PROCEDURE:

1. **Power:** Make Sure that all power to the sensor, controller and/or power supply is completely disconnected.
2. **Sensor Removal:** Make sure that the tank is in a state where it is safe to remove the sensors. Carefully, remove the Switch-Pak™ from the installation.
3. **Cleaning the Sensor:** Use a soft bristle brush and mild detergent, carefully wash the Switch Pak™. Do not use harsh abrasives such as steel wool or sandpaper, which might damage the surface sensor. Do not use incompatible solvents which may damage the sensor's PP or Ryton plastic body.
4. **Sensor Installation:** Follow the appropriate steps of installation as outlined in the installation section of this manual.

CONTROLLER LOGIC:

1. **Power LED:** Make sure the Green power LED is On when power is supplied to the controller.
2. **Input LED(s):** The input LED on the controller will be Amber when the switch is wet and Off when the switch is dry. Note: see Step 5 regarding reed switches. If the LED's are not switching the input LED, test the level switch.
3. **Relay:**
    a. **Invert Off:** When input is wet (Amber LED On), the relay will be energized (Red LED On). When input is dry (Amber LED Off), the relay will de-energize (Red LED Off).
    b. **Invert On:** When input is wet (Amber LED On), the relay will be de-energized (Red LED Off). When input is dry (Amber LED Off), the relay will energize (Red LED On).

CURRENT TEST (ULTRASONIC AND VIBRATION ONLY):

Used to verify if the sensor is indicating a wet or dry condition. This test uses only two wires (Red and Black). The sensor draws 5 mA (ultrasonic) or 8 mA (vibration) when it is dry, and 22 mA when wet.

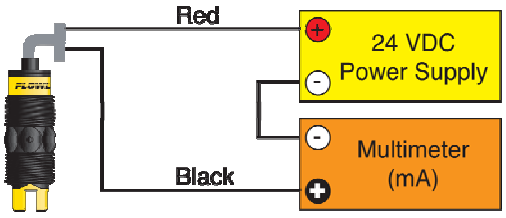

CONTACT TEST (BUOYANCY ONLY):

Used to verify if the reed switch is switching between dry (open) and wet (closed). Check for continuity across Black and White (open for dry and closed for wet). Checking across Black and Red will result in a closed when dry and open when wet condition.

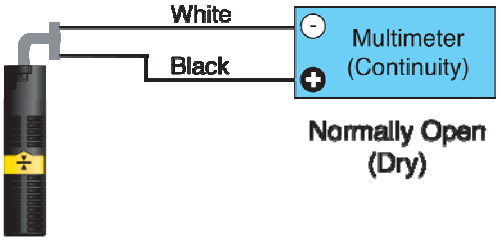

WARRANTY

Flowline warrants to the original purchaser of its products that such products will be free from defects in material and workmanship under normal use and service in accordance with instructions furnished by Flowline for a period of two years from the date of manufacture of such products. Flowline's obligation under this warranty is solely and exclusively limited to the repair or replacement, at Flowline's option, of the products or components, which Flowline's examination determines to its satisfaction to be defective in material or workmanship within the warranty period. Flowline must be notified pursuant to the instructions below of any claim under this warranty within thirty (30) days of any claimed lack of conformity of the product. Any product repaired under this warranty will be warranted only for the remainder of the original warranty period. Any product provided as a replacement under this warranty will be warranted for the full two years from the date of manufacture.

RETURNS

Products cannot be returned to Flowline without Flowline's prior authorization. To return a product that is thought to be defective, go to www.flowline.com, and submit a customer return (MRA) request form and follow the instructions therein. All warranty and non-warranty product returns to Flowline must be shipped prepaid and insured. Flowline will not be responsible for any products lost or damaged in shipment.

LIMITATIONS

This warranty does not apply to products which: 1) are beyond the warranty period or are products for which the original purchaser does not follow the warranty procedures outlined above; 2) have been subjected to electrical, mechanical or chemical damage due to improper, accidental or negligent use; 3) have been modified or altered; 4) anyone other than service personnel authorized by Flowline have attempted to repair; 5) have been involved in accidents or natural disasters; or 6) are damaged during return shipment to Flowline. Flowline reserves the right to unilaterally waive this warranty and dispose of any product returned to Flowline where: 1) there is evidence of a potentially hazardous material present with the product; or 2) the product has remained unclaimed at Flowline for more than 30 days after Flowline has dutifully requested disposition. This warranty contains the sole express warranty made by Flowline in connection with its products. ALL IMPLIED WARRANTIES, INCLUDING WITHOUT LIMITATION, THE WARRANTIES OF MERCHANTABILITY AND FITNESS FOR A PARTICULAR PURPOSE, ARE EXPRESSLY DISCLAIMED. The remedies of repair or replacement as stated above are the exclusive remedies for the breach of this warranty. IN NO EVENT SHALL FLOWLINE BE LIABLE FOR ANY INCIDENTAL OR CONSEQUENTIAL DAMAGES OF ANY KIND INCLUDING PERSONAL OR REAL PROPERTY OR FOR INJURY TO ANY PERSON. THIS WARRANTY CONSTITUTES THE FINAL, COMPLETE AND EXCLUSIVE STATEMENT OF WARRANTY TERMS AND NO PERSON IS AUTHORIZED TO MAKE ANY OTHER WARRANTIES OR REPRESENTATIONS ON BEHALF OF FLOWLINE. This warranty will be interpreted pursuant to the laws of the State of California. If any portion of this warranty is held to be invalid or unenforceable for any reason, such finding will not invalidate any other provision of this warranty.

For complete product documentation, video training, and technical support, go to www.flowline.com.
For phone support, call 562-598-3015 from 8am to 5pm PST, Mon - Fri.
(Please make sure you have the Part and Serial number available.)