CALL TOLL FREE 877-742-2878 FOR SALES AND SUPPORT
Return to BurtProcess.com

One for All - Unique Mixproof

Alfa Laval Unique Mixproof Tank Outlet Valve (Unique-TO)



Concept

The exceptional concept of this mixproof valve is characterized by excellent unmatched flexibility - yet still being very simple. The modular design gives you the perfect valve for your exact needs in all mixproof tank outlet operations allowing two different products in pipeline and tank.

Working Principle

Unique is remote-controlled by means of compressed air. The valve is a normally closed (NC) valve.
The valve has two independent plug seals, forming a leakage chamber. In the leakage chamber there is only atmospheric pressure during every working condition. In case of rare accidental leaking of product, this will flow into the leakage chamber and be discharged through the leakage outlet. When the valve is open, the leakage chamber is closed. The product can then flow from tank to pipeline.
The valve is water hammer protected in the pipeline due to the balanced plug that prevent the plug from closing too fast, when closing in the direction of product flow.
The valve can be cleaned to any level according to the needs in the specific process. There is virtually no spillage of product when operating the valve.

TECHNICAL DATA

Max. product pressure in pipeline: . . . . . .1000 kPa (10 bar)
Min. product pressure: .Full vacuum.
Temperature range: . . . .-5°C to +125°C (Depending on rubber quality)
Air pressure: . . . . . .Max. 800 kPa (8 bar).

PHYSICAL DATA

Product wetted steel parts: . . . . . 1.4404 (316L).
Other steel parts: . . . . . 1.4301 (304).

Surface finish - choose from the following:
Internal/external Matt (blasted) . . . . . Ra<1.6
Internal Bright (polished) . . . . . Ra<0.8
Internal/external Bright (internal polished) . . Ra<0.8
Note! The Ra values are only for the internal surface.

Product wetted seals: . . . . . EPDM.

Other seals:
CIP seals: . . . . . EPDM.
Actuator seals: . . . . . NBR.
Guide strips: . . . . . PTFE

Valve Body Combinations

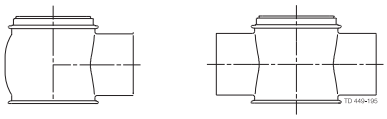

Type 20 Type 30

Standard design

The valve consists of one valve body, which is connected to either a tank flange or a stub flange with a clamp.
The body can be turned in any position if the clamp is slightly loosened.
The tank flange is welded directly into the tank. (Important! Observe welding guideline in instruction manual).
The tank flange is supplied with TÜV approval AD 2000 and inspection certificate 3.1 according to EN10204.
The design allows the Unique-TO to be installed in a horizontal position.

SpiralClean

The Alfa Laval SpiralClean system to clean the balanced plug and leakage chamber.
The system cleans more efficiently, uses less cleaning fluid by ensuring that a directional flow of CIP fluid reaches all the surfaces in much less time than with conventional systems.

Selection guide

The drawings below gives an overview of all options when choosing the valve to fit your process, thus demonstrating the actual flexibility of the Unique Mixproof tank outlet valve.

The Unique-TO concept offers balanced plug in pipe line, seat lift, CIP for the plugs and leakage chambers and any combination in between.

Unique-TO size flexibility

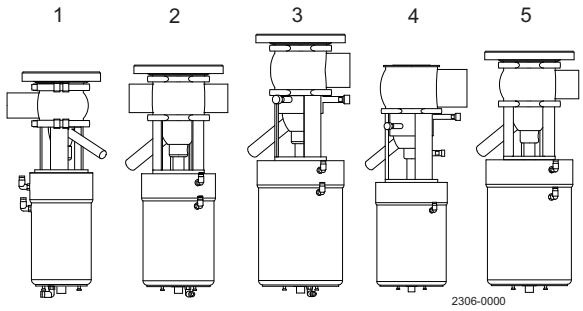

1. DN50 with tank flange, group 3 actuator including seat lift and seat push
2. ISO63.5 (2½") with tank flange, group 4 basic actuator including seat lift and seat push
3. ISO76.1 (3") with spiral on upper balanced plug and tank flange, group 5 basic actuator including seat lift and seat push
4. DN150 with spiralclean on leakage chamber upper balanced plug and group 4 basic actuator
5. ISO 63.5 (2½") with tank flange, group 4 basic actuator including seat lift

Unique-TO hygienic flexibility (spiral clean options)

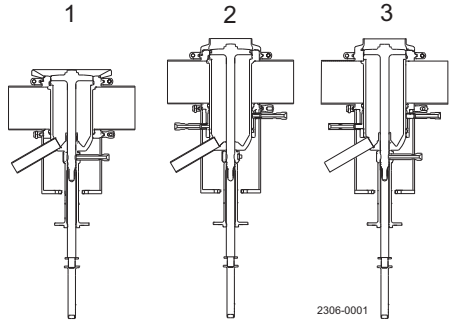

1. External CIP of leakage chamber
2. External CIP of upper balanced plug
3. External CIP cleaning of leakage chamber and upper balanced plug

Standard configurations

To assist you in the selection we have included some standard configurations:

- Unique-TO
- Unique-TO with external cleaning.

You can either choose these directly or add additional features ensuring that the valve suits your specific needs.

Unique-TO meets the typical demands of a process valve in the food and drink industry.

- Actuator with seat lift integrated.
- Standard balanced plug in pipeline.

Unique-TO with external cleaning meets the highest demands for hygienic processing.

- Actuator with seat lift integrated.
- Standard balanced plug in pipeline.
- SpiralClean of leakage chamber and balanced plug

Options

- Male parts or clamp liners in accordance with required standard.
- Control and Indication: IndiTop, ThinkTop or ThinkTop Basic.
- Side indication for detection of upper seat lift
- Product wetted seals in HNBR, NBR or FPM
- Various internal/external surface finish
- 3A (sanitary standard) on request
- Blind flange
- Conversion flange that enables replacement of an SMP-TO valve though reusing the existing SMP-TO tank flange - see fig. 1.
- Tank connection supplied separately

Fig. 1

Converting from SMP-TO valve to Unique-TO valve in tank flange

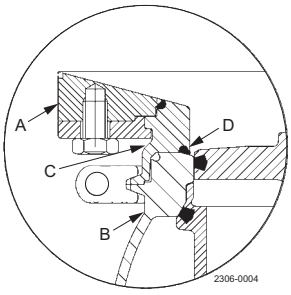

A. SMP-TO tank flange
B. Unique Mixproof TO valve
C. Conversion flange
D. O-ring for conversion flange

When Unique-TO is mounted on a SMP-TO flange via the Alfa Laval conversion flange add 28 mm to valve height dimensions (A1-A4)

Size		Max. size of particle (mm)	Max. tank pressure (kPa)	Actuator size 3-Basic (ø120x230)	Actuator size 4-Basic (ø157x252)	Actuator size 5-Basic (ø186x281)	Opening pressure in pipe line at 6 bar air pressure (kPa)
inch	DIN						
51	DN50	ø9	400	Standard			1000
63.5	DN65	ø15	450		Standard		1000
63.5	DN65	ø31	600			Long stroke	1000
76.1	DN80	ø15	450		Standard		1000
76.1	DN80	ø31	600			Long stroke	1000
101.6	DN100	ø31	450			Standard	1000
101.6	DN100	ø15	350		Option		1000
	DN125	ø33	350			Standard	1000
	DN125	ø15	250		Option		1000
	DN150	ø33	350			Standard	1000
	DN150	ø15	250		Option		1000

Notes:

Max. pressure in tank means that a higher pressure in tank will open the valve. It is possible to open with 10 bar (1000 kPa) in pipe line. When closing the valve the pressure cannot be higher than "Max. Tank pressure".

Pressure drop/capacity diagrams

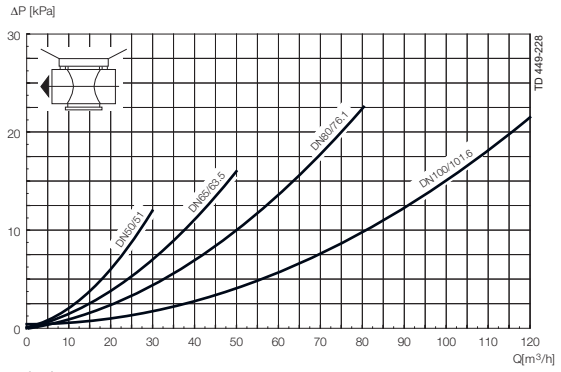

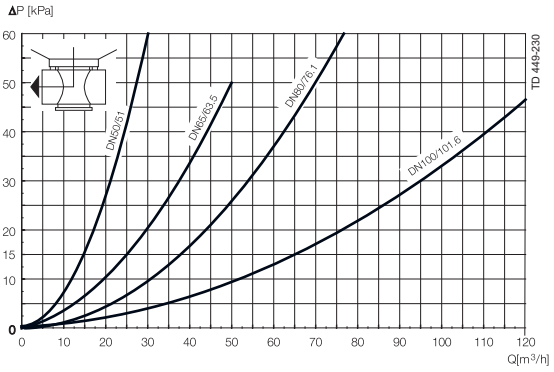

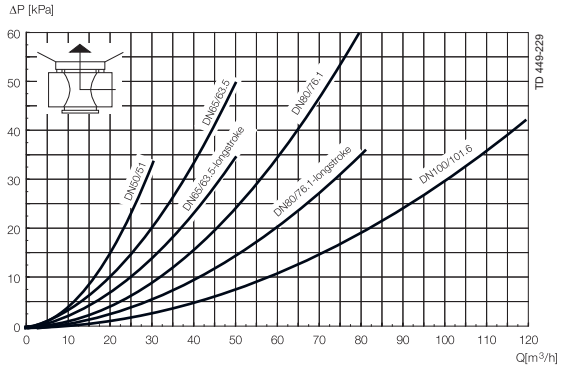

Note!

For the diagrams the following applies:
Medium: Water (20° C)

Measurement: In accordance with VDI 2173

Air and CIP Consumption

Size	DN/OD				DN						Longstroke			
											DN/OD		DN	
ISO-DIN	**51**	**63.5**	**76.1**	**101.6**	**50**	**65**	**80**	**100**	**125**	**150**	**63.5**	**76.1**	**65**	**80**
Air consumption for Balanced Seat-lift Litre = volume at atmosphere pressure	0.20	0.40	0.40	0.62	0.20	0.40	0.40	0.62	0.62	0.62	0.40	0.40	0.40	0.40
Air consumption for Tank Seat-lift Litre = volume at atmosphere pressure	1.10	0.13	0.13	0.21	1.10	0.13	0.13	0.21	0.21	0.21	0.13	0.13	0.13	0.13
Air consumption for Main Movement Litre = volume at atmosphere pressure	0.86	1.63	1.63	2.79	0.86	1.62	1.62	2.79	2.79	2.79	1.63	1.63	1.62	1.62
Kv-value for Balanced CIP Seat-lift [m^3/h]	1.50	2.50	2.50	1.90	1.50	2.50	2.50	1.90	3.70	3.70	2.50	2.50	2.50	2.50
Kv-value for Tank Seat-lift [m^3/h]	0.90	1.90	1.90	1.40	0.90	1.90	1.90	1.40	3.10	3.10	1.90	1.90	1.90	1.90
Kv-value for SpiralClean Spindle CIP [m^3/h]	0.12	0.12	0.12	0.12	0.12	0.12	0.12	0.12	0.12	0.12	0.12	0.12	0.12	0.12
Kv-value for SpiralClean External CIP in leakage chamber [m^3/h]	0.25	0.29	0.29	0.29	0.25	0.29	0.29	0.29	0.29	0.29	0.29	0.29	0.29	0.29

Note:
Recommended min. pressure for SpiralClean: 2 bar.

Formula to estimate CIP flow during seat lift:
(for liquids with comparable viscosity and density to water):

$Q = Kv \cdot \sqrt{\Delta\ p}$

Q = CIP - flow (m^3/h).
Kv = Kv value from the above table.
Δ p = CIP pressure (bar).

Unique-TO connected to tank flange

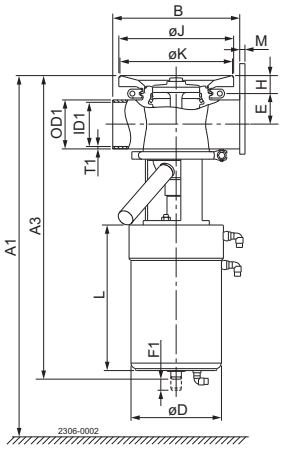

Unique-TO connected to stub flange

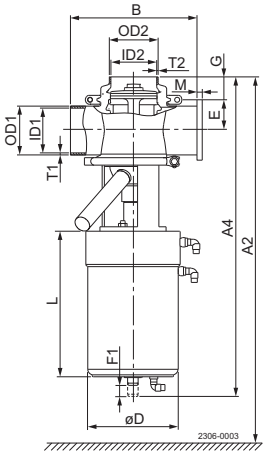

A1 + A2 = Min. clearance to allow that actuator and internal valve parts can be lifted out of the valve body. If ThinkTop is mounted, add 180 mm.

											Longstroke			
Size	DN/OD				DN						DN/OD		DN	
ISO-DIN	51	63.5	76.1	101.6	50	65	80	100	125	150	63.5	76.1	65	80
A1 min. dimension. Unique-TO	579	646	659	753	577	652	667	755	805	890	700	713	706	721
A1 min. dimension. Unique-TO with external cleaning	616	686	699	813	614	692	707	815	865	---	740	753	746	761
A2 min. dimension Unique-TO	588	655	668	762	586	661	676	764	814	899	709	722	715	730
A2 min. dimension Unique-TO with external cleaning	625	695	708	822	623	701	716	824	874	---	749	762	755	770
A3 Unique-TO	468	526	526	594	468	526	526	594	620	680	575	575	575	575
A3 Unique-TO with external cleaning	505	566	566	654	505	566	566	654	680	---	615	615	615	615
A4 Unique-TO	477	535	535	603	477	535	535	603	629	689	584	584	584	584
A4 Unique-TO with external cleaning	514	575	575	663	514	575	575	663	689	---	624	624	624	624
B	220	220	220	300	220	220	220	300	300	300	220	220	220	220
OD1	51	63.5	76.1	101.6	53	70	85	104	129	154	63.5	76.1	70	85
ID1	47.8	60.3	72.9	97.6	50	66	81	100	125	150	60.3	72.9	66	81
t1	1.6	1.6	1.6	2.0	1.5	2.0	2.0	2.0	2.0	2.0	1.6	1.6	2.0	2.0
E	36.9	43.2	49.5	61.8	38	46	53.5	63	75.5	88	43.2	49.5	46	53.5
F1	31.5	38	38	59	31.5	38	38	59	59	59	59	59	59	59
F2 (Tank plug)	5	5	5	5	5	5	5	5	5	5	5	5	5	5
G	40	40	40	40	40	40	40	40	40	40	40	40	40	40
H	31	31	31	31	31	31	31	31	31	31	31	31	31	31
øD	120	157	157	186	120	157	157	186	186	186	186	186	186	186
L	230	252	252	281	230	252	252	281	281	281	281	281	281	281
OD2	51	63.5	76.1	101.6	53	70	85	104	129	129	63.5	76.1	70	85
ID2	47.8	60.3	72.9	97.6	50	66	81	100	125	125	60.3	72.9	66	81
t2	1.6	1.6	1.6	2.0	1.5	2.0	2.0	2.0	2.0	2.0	1.6	1.6	2.0	2.0
øJ	159	199	199	199	159	199	199	199	199	199	199	199	199	199
øK	155	195	195	195	155	195	195	195	195	195	195	195	195	195
M/ISO clamp	21	21	21	21	---	---	---	---	---	---	21	21	---	---
M/DIN clamp	---	---	---	---	21	21	21	21	28	28	---	---	21	21
M/ISO male	21	21	21	21	---	---	---	---	---	---	21	21	---	---
M/DIN male	---	---	---	---	23	25	25	30	46	50	---	---	25	25
M/SMS male	20	24	24	35	---	---	---	---	---	---	24	24	---	---
M/BS male	22	22	22	27	---	---	---	---	---	---	22	22	---	---
Weight [kg]* Unique TO	12.5	22.5	22.5	33	12.5	22.5	22.5	33	36	38	28	28	28	28
Weight [kg]* Unique TO with external cleaning	13	23.5	23.5	34	13	23.5	23.5	34	37	---	29	29	29	29

* = without tank flange