Brass and stainless steel magnet drive rotary vane pumps TM 30-200 series

The Fluid-o-Tech® magnetic drive rotary vane pumps combine the established range of pumps with the added advantage of an indirect magnetic coupling:

- longer service life
- low maintenance
- smooth transmission
- totally sealed body
- less power consumption

The principle of the magnetic drive comprises an inner magnet embodied in the pump and connected to the rotor, and an outer magnet connected to the motor shaft. The pole-to-pole alignment of the two magnets provides the driving motion to the pump. Decoupling occurs when the pump load exceeds the coupling torque between the magnets. The introduction of a new driving magnet with increased torque (available upon request) brings the maximum operating pressure to the same values of the PO series with direct coupling. The Rotoflow® TM series magnetic drive rotary vane pumps are available in stainless steel AISI 303 or brass, with carbon graphite internal components and NBR seals. Maximum operative temperature: 70 °C (158 F).

Available upon request:
- Viton®/EPDM seals



MAIN APPLICATIONS

- Espresso coffee machines
- Cooling systems
- Water treatment
- Booster systems
- Solar systems

TECHNICAL INFORMATION

Pump housing material	Brass or stainless steel	Speed limit	3500 rpm
Pumping chamber	Carbon graphite	Max static pressure	20 bar/290 psi
Ports	3/8” GAS or NPT	Pump weight	1.1 kg (2.4 lb)

STAINLESS STEEL VERSION

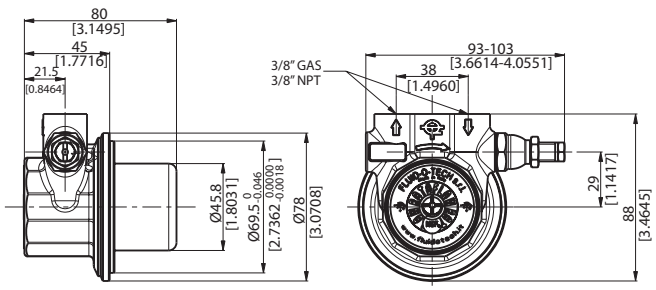

BRASS VERSION

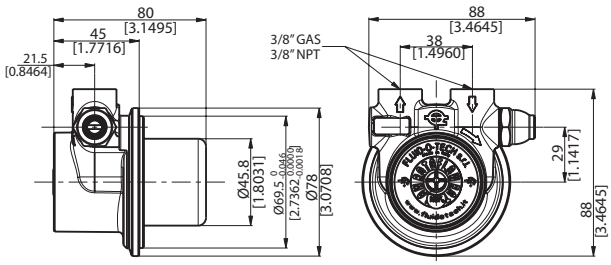

Dimensions in mm [inches]

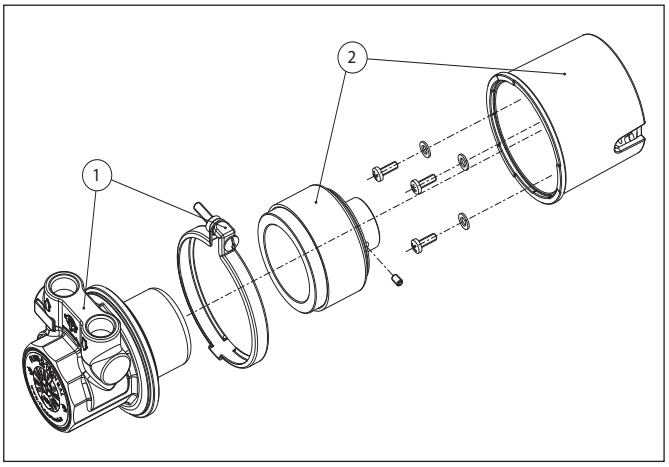

POS	DESCRIPTION	CODE
1	TM series pump	
2	Standard mounting assembly (M56-B14)	TMBF56S
	High torque mounting assembly (M56-B14)	TMBS56C
	Standard mounting assembly (M63-B14)	TMBF63S
	High torque mounting assembly (M63-B14)	TMBS63C
	Standard mounting assembly (NEMA 56C)	TMBF5BS
	High torque mounting assembly (NEMA 56C)	TMBS5BC

Note: The "C" series driving magnets provide a slot in the internal bore to accept the driving key of motors M56 and M63 frame.

MODEL	RELIEF VALVE	HOUSING	FIGURE
TMSS030	NO	STAINLESS STEEL	A-A
TMSS050			B-B
TMSS070			C-C
TMSS100			D-D
TMSS150			E-E
TMSS200			F-F
TMSS031	STANDARD		A-A
TMSS051			B-B
TMSS071			C-C
TMSS101			D-D
TMSS151			E-E
TMSS201			F-F
TMOT030	NO	BRASS	A-A
TMOT050			B-B
TMOT070			C-C
TMOT100			D-D
TMOT150			E-E
TMOT200			F-F
TMOT031	STANDARD		A-A
TMOT051			B-B
TMOT071			C-C
TMOT101			D-D
TMOT151			E-E
TMOT201			F-F
TMOT034	BALANCED		A-A
TMOT054			B-B
TMOT074			C-C
TMOT104			D-D
TMOT154			E-E
TMOT204			F-F

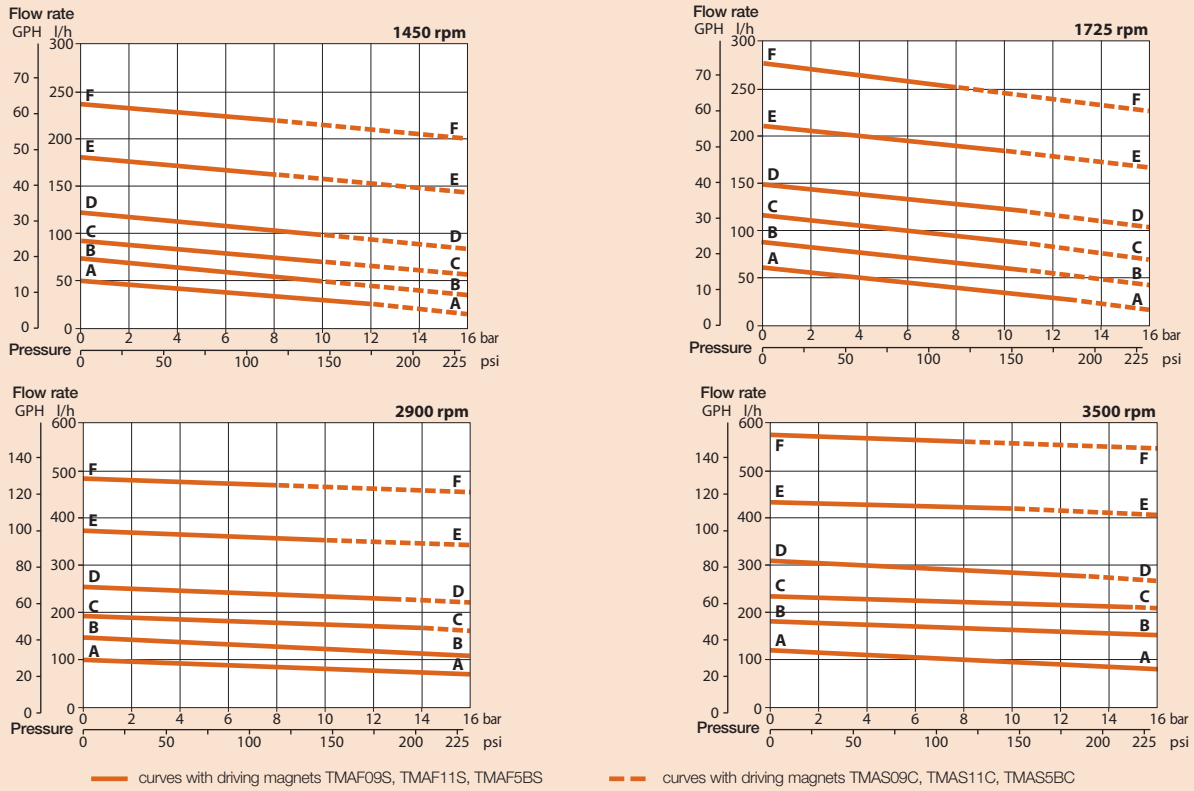

Note: Hydraulic characteristics with water at 20 °C (68 F) and without bypass. Use filter before pump inlet not larger than 10 microns.
For applications involving other fluids, high temperatures, unusual processing conditions or speed higher than 2500 rpm consult the factory or an authorized distributor.

Fluid-o-Tech reserves the right to alter the specifications indicated in this catalogue at any time and without prior notice.

Fluid-o-Tech srl
Via Leonardo da Vinci, 40
20094 Corsico, Milano, Italy
Tel. +39 02 9995 01
Fax +39 02 9995 0999
info@fluidotech.it

Fluid-o-Tech Int'l Inc.
161 Atwater St.,
06479 Plantsville CT (USA)
Tel. +1 (860) 276 9270
Fax +1 (860) 620 0193
info@fluid-o-tech.com

Fluid-o-Tech Int'l Inc. Japan
201, 4-3-10, Todoroki,
Setagaya, Tokyo 158-082, Japan
Tel. +81 (0) (3) 6432 1812
Fax +81 (0) (3) 6432 1813
erkkato@fluidotech.jp

Fluid-o-Tech Asia (Beijing) Co., Ltd
Jingwei Industrial Zone,
Beifang Huairou, Beijing, 101400, PRC
Tel. +86 (0) (10) 6168 4650
Fax +86 (0) (10) 6168 4651
info@fluidotech-asia.com