Magnetic drive rotary vane pump-motor units TMCF01S-TMCF07S series

Fluid-o-Tech® has combined its expertise in rotary vane pumps and magnet drives to exclusively manufacture this series of pumps. The principle of the magnet drive is the driving force of the pole-to-pole alignment of two magnets.
The driven magnet is fixed to the pump shaft, while the driving magnet is fixed to the motor shaft and closely located to the driven magnet. By means of magnet attraction, the pump rotates in response to motor shaft rotation.
Available in 6 different displacements, with either a brass or stainless steel housing, AISI 303 rotor, carbon graphite pumping chamber and 3/8" GAS or NPT threaded ports, this pump line may be equipped, upon request, with standard or balanced built-in relief valve and NBR, EPDM or Viton® seals.

Compared to conventional coupling, the magnet drive has several advantages:

1) Longer service life
2) No leaks or contamination
3) Noiseless operation
4) No contact between pump and motor shaft
5) Higher efficency

- Max system pressure: 18 bar (260 psi)
- Max temperature: 70 °C (158 F)



MAIN APPLICATIONS

- Espresso coffee machines
- Soda circulation
- Reverse osmosis
- Solar heating systems
- Cooling systems
- Refrigerating gas transfer

TMCF01S

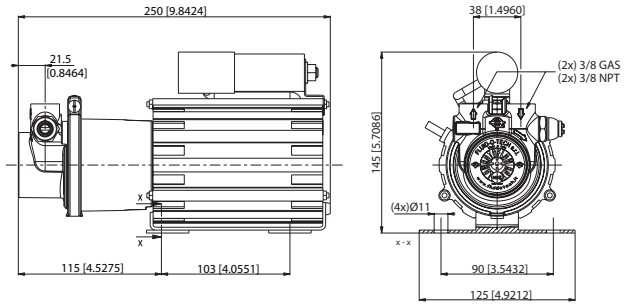

Dimensions in mm [inches]

TMCF07S

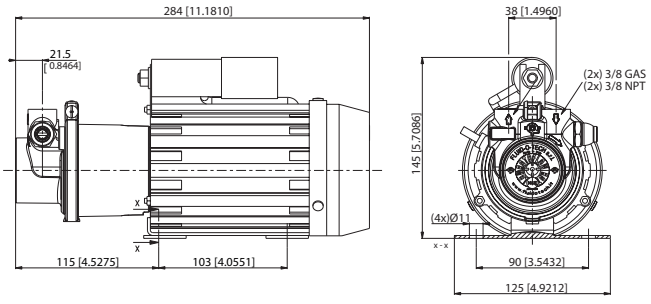

Dimensions in mm [inches]

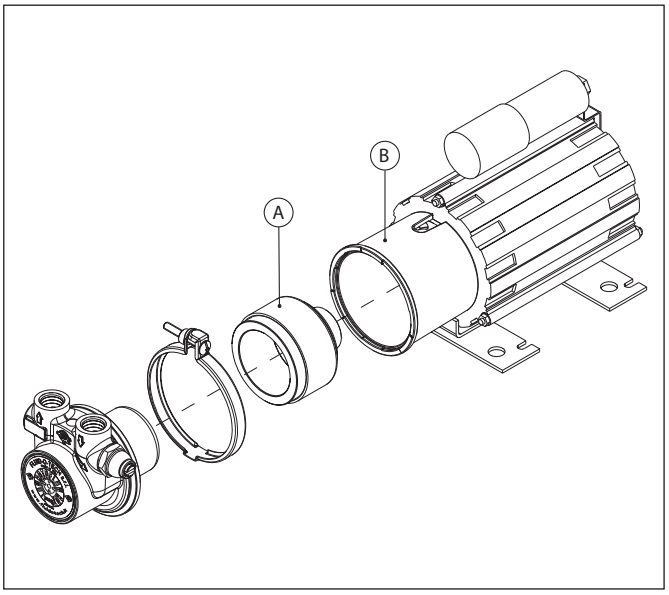

POS.	DESCRIPTION	CODE	
A	9 mm bore ferrite driving magnet	TMAF09S	TMAF09S
A+B	Motor with PPS adapter	TMCF01S	TMCF07S

DRIVING UNIT	TMCF01S	TMCF07S
Code	6900128	6900338
Voltage (V)	230 AC	230 AC
Frequency (Hz)	50/60	50/60
Poles	2	2
Rated speed (rpm)	2850/3400	2870/3450
Current consumption (A)	0.75	0.8
Output power (W)	90	90
Pump motor weight (kg)	5.6	5.7
Duty	Intermittent	Continuous

MODEL	RELIEF VALVE	HOUSING	FIGURE
TMSS030	NO	STAINLESS STEEL	A-A
TMSS050			B-B
TMSS070			C-C
TMSS100			D-D
TMSS150			E-E
TMSS200			F-F
TMSS031	STANDARD		A-A
TMSS051			B-B
TMSS071			C-C
TMSS101			D-D
TMSS151			E-E
TMSS201			F-F
TMOT030	NO	BRASS	A-A
TMOT050			B-B
TMOT070			C-C
TMOT100			D-D
TMOT150			E-E
TMOT200			F-F
TMOT031	STANDARD		A-A
TMOT051			B-B
TMOT071			C-C
TMOT101			D-D
TMOT151			E-E
TMOT201			F-F
TMOT034	BALANCED		A-A
TMOT054			B-B
TMOT074			C-C
TMOT104			D-D
TMOT154			E-E
TMOT204			F-F

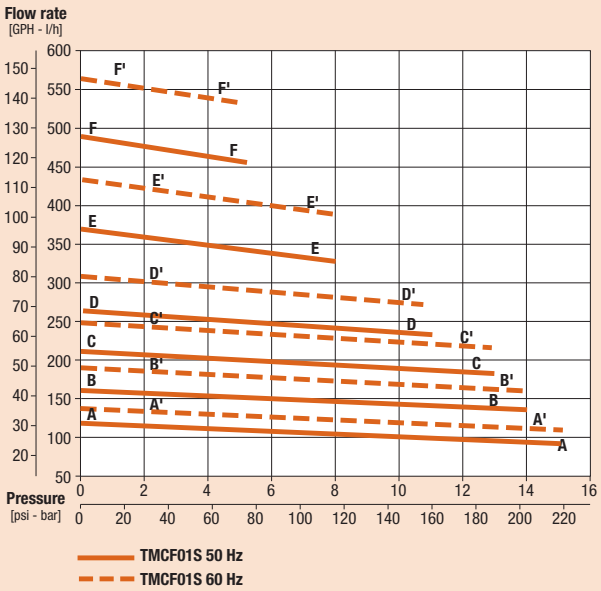

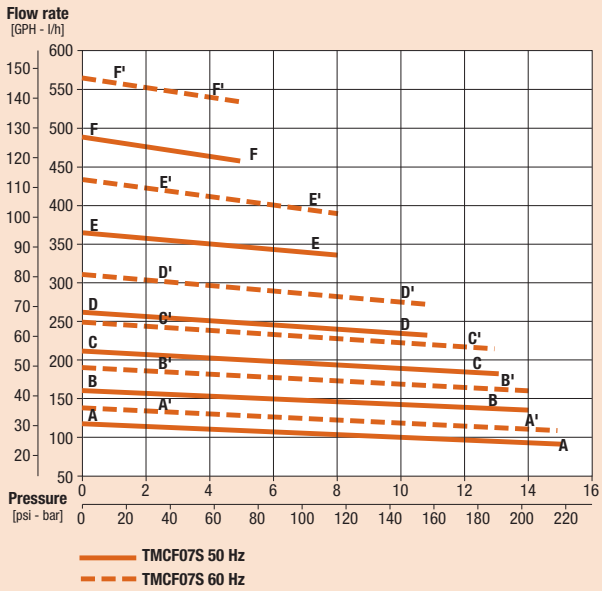

Note: Characteristics with water at 20 °C (68 F) and without bypass. Use filter before pump inlet not larger than 20 microns.
For applications involving other fluids, high temperatures or unusual processing conditions, please consult the factory or an authorized Fluid-o-Tech distributor.

Fluid-o-Tech reserves the right to alter the specifications indicated in this catalogue at any time and without prior notice.

Fluid-o-Tech srl
Via Leonardo da Vinci, 40
20094 Corsico, Milano, Italy
Tel. +39 02 9995 01
Fax +39 02 9995 0999
info@fluidotech.it

Fluid-o-Tech Int'l Inc.
161 Atwater St.,
06479 Plantsville CT (USA)
Tel. +1 (860) 276 9270
Fax +1 (860) 620 0193
info@fluid-o-tech.com

Fluid-o-Tech Int'l Inc. Japan
201, 4-3-10, Todoroki,
Setagaya, Tokyo 158-082, Japan
Tel. +81 (0) (3) 6432 1812
Fax +81 (0) (3) 6432 1813
erkkato@fluidotech.jp

Fluid-o-Tech Asia (Shanghai) Co., Ltd.
2/F, Factory building 6 (1), No. 258, Zhijiang Road,
Fengxian District, Shanghai City, Z.P.: 201499 China
Tel. +86 (021) 67100 838
Fax +86 (021) 67100 605
info@fluidotech-asia.com