SERVICE & OPERATING MANUAL

Original Instructions

Certified Quality

ISO 9001 Certified
ISO 14001 Certified

Model U1F

Metallic

Design Level 1

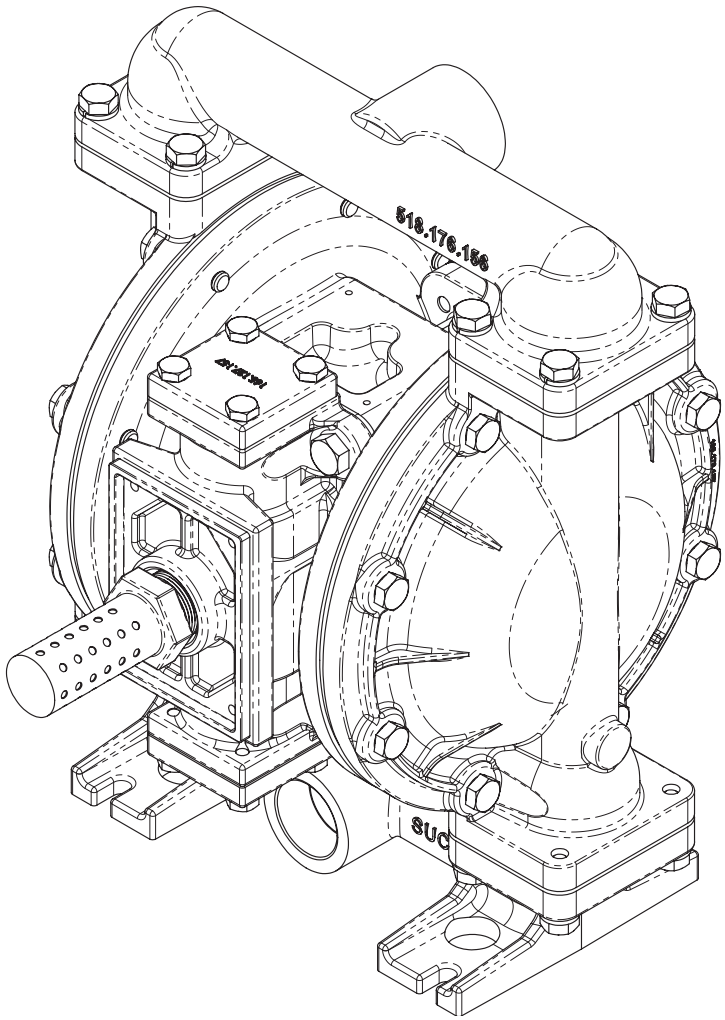

Warren Rupp, Inc.
A Unit of IDEX Corporation
800 N. Main St.,
Mansfield, Ohio 44902 USA
Telephone 419.524.8388
Fax 419.522.7867
SANDPIPERPUMP.COM

© Copyright 2022 Warren Rupp, Inc.
All rights reserved

SANDPIPER®
A WARREN RUPP, INC. BRAND
SANDPIPERPUMP.COM

Safety Information

⚠ IMPORTANT



Read the safety warnings and instructions in this manual before pump installation and start-up. Failure to comply with the recommendations stated in this manual could damage the pump and void factory warranty.



When the pump is used for materials that tend to settle out or solidify, the pump should be flushed after each use to prevent damage. In freezing temperatures the pump should be completely drained between uses.

⚠ CAUTION



Before pump operation, inspect all fasteners for loosening caused by gasket creep. Retighten loose fasteners to prevent leakage. Follow recommended torques stated in this manual.



Nonmetallic pumps and plastic components are not UV stabilized. Ultraviolet radiation can damage these parts and negatively affect material properties. Do not expose to UV light for extended periods of time.



WARNING
Pump not designed, tested or certified to be powered by compressed natural gas. Powering the pump with natural gas will void the warranty.



WARNING
The use of non-OEM replacement parts will void (or negate) agency certifications, including CE, ATEX, CSA, 3A and EC1935 compliance (Food Contact Materials). Warren Rupp, Inc. cannot ensure nor warrant non-OEM parts to meet the stringent requirements of the certifying agencies.

⚠ WARNING



When used for toxic or aggressive fluids, the pump should always be flushed clean prior to disassembly.



Before maintenance or repair, shut off the compressed air line, bleed the pressure, and disconnect the air line from the pump. Be certain that approved eye protection and protective clothing are worn at all times. Failure to follow these recommendations may result in serious injury or death.



Airborne particles and loud noise hazards. Wear eye and ear protection.



In the event of diaphragm rupture, pumped material may enter the air end of the pump, and be discharged into the atmosphere. If pumping a product that is hazardous or toxic, the air exhaust must be piped to an appropriate area for safe containment.



Take action to prevent static sparking. Fire or explosion can result, especially when handling flammable liquids. The pump, piping, valves, containers and other miscellaneous equipment must be properly grounded.



This pump is pressurized internally with air pressure during operation. Make certain that all fasteners are in good condition and are reinstalled properly during reassembly.



Use safe practices when lifting

ATEX Pumps - Conditions For Safe Use

1. Ambient temperature range is as specified in tables 1 to 3 on the next page *(per Annex I of DEKRA 18ATEX0094X)*

2. ATEX compliant pumps are suitable for use in explosive atmospheres when the equipment is properly grounded in accordance with local electrical codes

3. **Non-Metallic ATEX Pumps only — See Explanation of Pump Nomenclature / ATEX Details Page**
Conductive Polypropylene, conductive Acetal or conductive PVDF pumps are not to be installed in applications where the pumps may be subjected to oil, greases and hydraulic liquids.

4. The optionally provided solenoids shall be protected by a fuse corresponding to its rated current (max 3*Irat according to EN 60127) or by a motor protecting switch with short circuit and thermal instantaneous tripping (set to the rated current) as short circuit protection. For solenoids with a very low rated current, a fuse with the lowest current value according to the indicated standard will be sufficient. The fuse may be accommodated in the associated supply unit or shall be separately arranged. The rated voltage of the fuse shall be equal or greater than the stated rated voltage of the solenoid. The breaking capacity of the fuse shall be as high as or higher than the maximum expected short circuit current at the location of the installation (usually 1500 A). The maximum permissible ripple is 20% for all dc solenoids.
***Not applicable for all pump models — See Explanation of Pump Nomenclature / ATEX Details Page**

5. When operating pumps equipped with non-conductive diaphragms that exceed the maximum permissible projected area, as defined in EN ISO 80079-36 : 2016 section 6.7.5 table 8, the following protection methods must be applied
- Equipment is always used to transfer electrically conductive fluids or
- Explosive environment is prevented from entering the internal portions of the pump, i.e. dry running.

6. Pumps provided with the pulse output kit and used in the potentially explosive atmosphere caused by the presence of the combustible dust shall be installed in such a way that the pulse output kit is protected against impact
***Not applicable for all pump models — See Explanation of Pump Nomenclature / ATEX Details Page**

Temperature Tables

Table 1. Category 1 & Category 2 ATEX Rated Pumps

Ambient Temperature Range [°C]	Process Temperature Range [°C][1]	Temperature Class	Maximum Surface Temperature [°C]
-20°C to +60°C	-20°C to +80°C	T5	T100°C
	-20°C to +108°C	T4	T135°C
	-20°C to + 160°C	T3	T200°C
	-20°C to +177°C	(225°C) T2	

[1]Per CSA standards ANSI LC6-2018 US & Canadian Technical Letter R14, G-Series Natural Gas Models are restricted to (-20°C to + 80°C) process temperature

Table 2. Category 2 ATEX Rated Pumps Equipped with Pulse Output Kit or Integral Solenoid:

Ambient Temperature Range [°C]	Process Temperature Range [°C]	Temperature Class	Maximum Surface Temperature [°C]	Options	
				Pulse Output Kit	Integral Solenoid
-20°C to +60°C	-20°C to +100°C	T5	T100	X	
-20°C to +50°C	-20°C to +100°C	T5	T100		X

[2]ATEX Pulse output or Intergral Solenoid Not Available For All Pump Models See Explanation of Pump Nomenclature / ATEX Details Page

Table 3. Category M1 ATEX Rated Pumps for Mining

Ambient Temperature Range [°C]	Process Temperature Range [°C]
-20°C to +60°C	-20°C to +150°C

Note: The ambient temperature range and the process temperature range should not exceed the operating temperature range of the applied non-metallic parts as listed in the manuals of the pumps.

Table of Contents

SECTION 1: PUMP SPECIFICATIONS.....1
- Explanation of Nomenclature
- Performance
- Materials
- Dimensional Drawings

SECTION 2: INSTALLATION & OPERATION ...5
- Principle of Pump Operation
- Recommended Installation Guide
- Troubleshooting Guide

SECTION 3: EXPLODED VIEW.....8
- Composite Repair Parts Drawing
- Composite Repair Parts List
- Material Codes

SECTION 4: AIR END 11
- Air Distribution Valve Assembly
- Air Valve with Stroke Indicator Assembly
- Pilot Valve Assembly
- Intermediate Assembly

SECTION 5: WET END.....19
- Diaphragm Drawings
- Diaphragm Servicing

SECTION 6: OPTIONAL CONFIGURATIONS .21
- Solenoid Shifted Air Valve

SECTION 7: WARRANTY & CERTIFICATES ..23
- Warranty
- CE Declaration of Conformity - Machinery
- ATEX Declaration of Conformity

Explanation of Pump Nomenclature

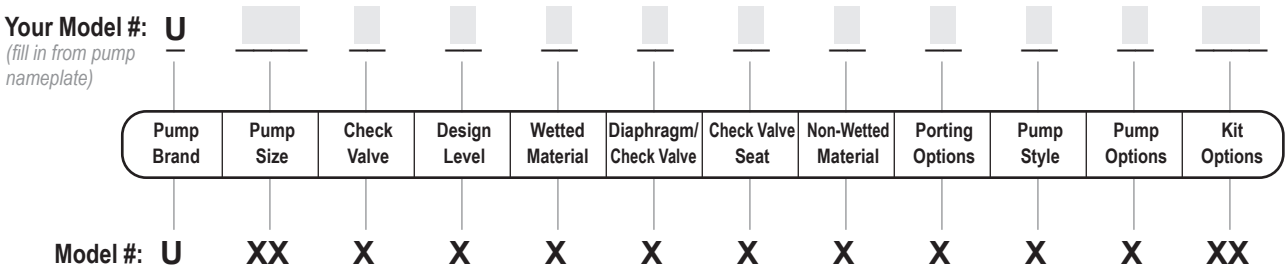

Pump Brand
U UL79 Listed SANDPIPER®

Pump Size
1F 1"

Check Valve Type
B Ball

Design Level
1 Design Level

Wetted Material
C Conductive Painted Aluminum
X Unpainted Aluminum

Diaphragm/Check Valve Materials
B Nitrile/Nitrile
G PTFE-Neoprene/PTFE

Check Valve Seat
A Aluminum
T PTFE

Non-Wetted Material Options
C Conductive Painted Aluminum
X Unpainted Aluminum

Porting Options
N NPT Threads
B BSP (Tapered) Threads
S NPT Suction Port Facing Air Inlet, NPT Discharge Port Facing Air Exhaust

Pump Style
S Standard

Pump Options
6 Metal Muffler

Model U1FB1XBTXNS600 is UL79 listed for pumping: Gasoline, Diesel Fuel, No. 4 Fuel Oils (or lighter), Motor Oil, Kerosene, Aviation Fuel and Water

Model U1FB1XGTXNS600 and U1FB1XGAXNS600 are UL79 listed for pumping: Gasoline (Including Alcohol Blends up to 15%), Diesel Fuel, Motor Oil, No. 4 Oil (or lighter), Kerosene, Aviation Fuel, Automatic Transmission Fluid, Water, Waste Oil, and Ethylene Glycol.

Your Serial #: *(fill in from pump nameplate)* _____

ATEX Detail

II 2 G Ex h IIC T5...225°C (T2) Gb
II 2 D Ex h IIIC T100°C...T200°C Db

Performance

S1F METALLIC

SUCTION/DISCHARGE PORT SIZE
- 1" NPT (internal)
- 1" BSPT Tapered (internal)

CAPACITY
- 0 to 45 gallons per minute (0 to 170 liters per minute)

AIR DISTRIBUTION VALVE
- No-lube, no-stall design

SOLIDS-HANDLING
- Up to .25 in. (6mm)

HEADS UP TO
- 100 psi or 230.7 ft. of water (7 Kg/cm2 or 70 meters)

DISPLACEMENT/STROKE
- .11 Gallon / .42 liter

MAXIMUM OPERATING PRESSURE
- 100 psi (7 bar)

SHIPPING WEIGHT
- Aluminum 28 lbs. (13kg)
- Cast Iron 46 lbs. (21kg)
- Stainless Steel 43 lbs. (20kg)

Performance based on the following: elastomer fitted pump, flooded suction, water at ambient conditions.
The use of other materials and varying hydraulic conditions may result in deviations in excess of 5%.

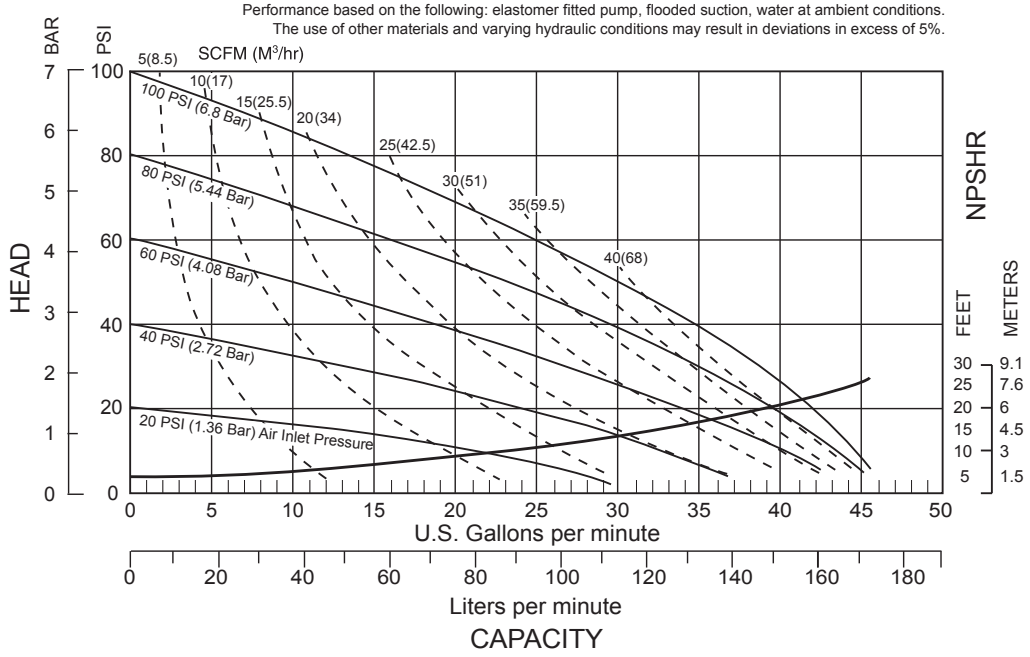

Materials

Material Profile:	Operating Temperatures:	
⚠ *CAUTION! Operating temperature limitations are as follows:*	Max.	Min.
Conductive Acetal: Tough, impact resistant, ductile. Good abrasion resistance and low friction surface. Generally inert, with good chemical resistance except for strong acids and oxidizing agents.	190°F 88°C	-20°F -29°C
EPDM: Shows very good water and chemical resistance. Has poor resistance to oils and solvents, but is fair in ketones and alcohols.	280°F 138°C	-40°F -40°C
FKM: (Fluorocarbon) Shows good resistance to a wide range of oils and solvents; especially all aliphatic, aromatic and halogenated hydrocarbons, acids, animal and vegetable oils. Hot water or hot aqueous solutions (over 70°F(21°C)) will attack FKM.	350°F 177°C	-40°F -40°C
Hytrel®: Good on acids, bases, amines and glycols at room temperatures only.	220°F 104°C	-20°F -29°C
Neoprene: All purpose. Resistance to vegetable oils. Generally not affected by moderate chemicals, fats, greases and many oils and solvents. Generally attacked by strong oxidizing acids, ketones, esters and nitro hydrocarbons and chlorinated aromatic hydrocarbons.	200°F 93°C	-10°F -23°C
Nitrile: General purpose, oil-resistant. Shows good solvent, oil, water and hydraulic fluid resistance. Should not be used with highly polar solvents like acetone and MEK, ozone, chlorinated hydrocarbons and nitro hydrocarbons.	190°F 88°C	-10°F -23°C
Nylon: 6/6 High strength and toughness over a wide temperature range. Moderate to good resistance to fuels, oils and chemicals.	180°F 82°C	32°F 0°C
Polypropylene: A thermoplastic polymer. Moderate tensile and flex strength. Resists stong acids and alkali. Attacked by chlorine, fuming nitric acid and other strong oxidizing agents.	180°F 82°C	32°F 0°C
PVDF: (Polyvinylidene Fluoride) A durable fluoroplastic with excellent chemical resistance. Excellent for UV applications. High tensile strength and impact resistance.	250°F 121°C	0°F -18°C
Santoprene®: Injection molded thermoplastic elastomer with no fabric layer. Long mechanical flex life. Excellent abrasion resistance.	275°F 135°C	-40°F -40°C
UHMW PE: A thermoplastic that is highly resistant to a broad range of chemicals. Exhibits outstanding abrasion and impact resistance, along with environmental stress-cracking resistance.	180°F 82°C	-35°F -37°C
Urethane: Shows good resistance to abrasives. Has poor resistance to most solvents and oils.	150°F 66°C	32°F 0°C
Virgin PTFE: (PFA/TFE) Chemically inert, virtually impervious. Very few chemicals are known to chemically react with PTFE; molten alkali metals, turbulent liquid or gaseous fluorine and a few fluoro-chemicals such as chlorine trifluoride or oxygen difluoride which readily liberate free fluorine at elevated temperatures.	220°F 104°C	-35°F -37°C

Maximum and Minimum Temperatures are the limits for which these materials can be operated. Temperatures coupled with pressure affect the longevity of diaphragm pump components. Maximum life should not be expected at the extreme limits of the temperature ranges.

Metals:

Alloy C: Equal to ASTM494 CW-12M-1 specification for nickel and nickel alloy.

Stainless Steel: Equal to or exceeding ASTM specification A743 CF-8M for corrosion resistant iron chromium, iron chromium nickel and nickel based alloy castings for general applications. Commonly referred to as 316 Stainless Steel in the pump industry.

For specific applications, always consult the Chemical Resistance Chart.

Dimensional Drawings

U1F UL79 Listed Metallic Design Level 1

Dimensions in inches (mm dimensions in brackets). Dimensional Tolerance:±1/8" (± 3mm)

The dimensions on this drawing are for reference only. A certified drawing can be requested if physical dimensions are needed.

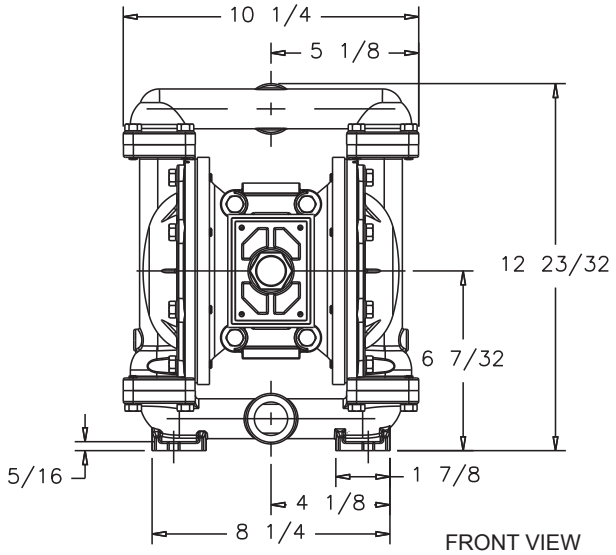

FRONT VIEW

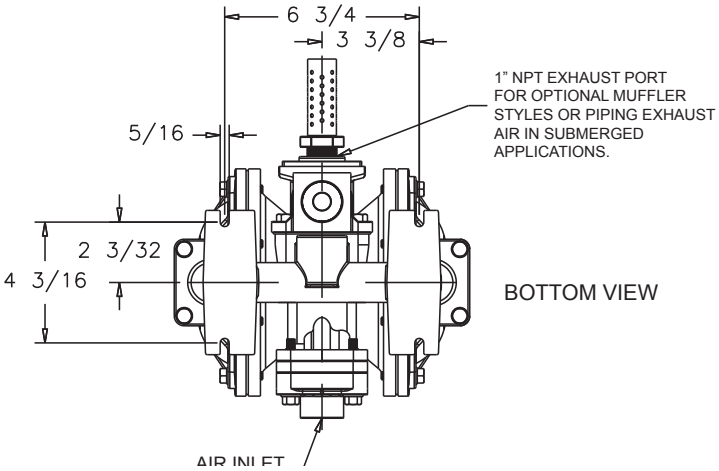

BOTTOM VIEW

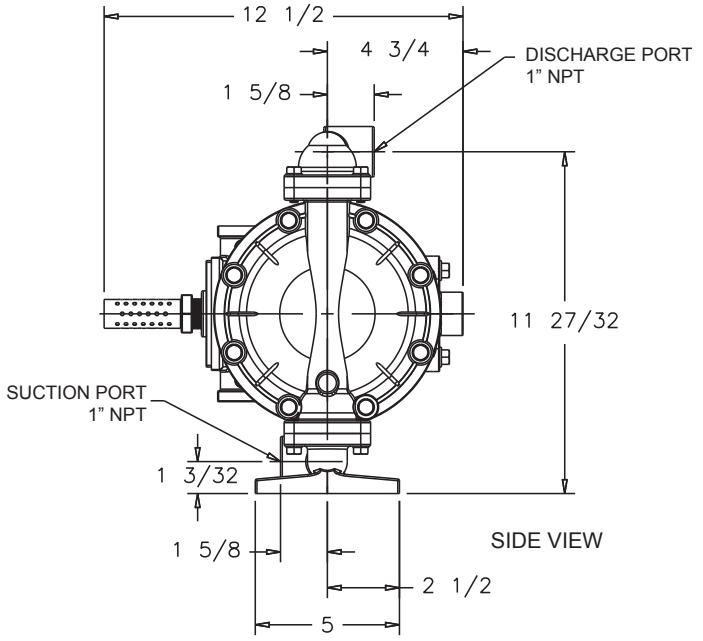

SIDE VIEW

WITH 530-033-000 MUFFLER

BOTH SUCTION AND DISCHARGE PORTS ARE AVAILABLE WITH 1" BSPT TAPERED THREADS

Dimensional Drawings

U1F UL79 Listed Metallic Design Level 1

Dimensions in inches (mm dimensions in brackets). Dimensional Tolerance:±1/8" (± 3mm)

The dimensions on this drawing are for reference only. A certified drawing can be requested if physical dimensions are needed.

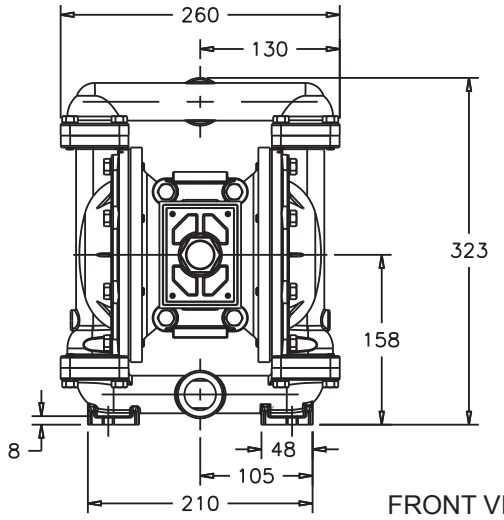

FRONT VIEW

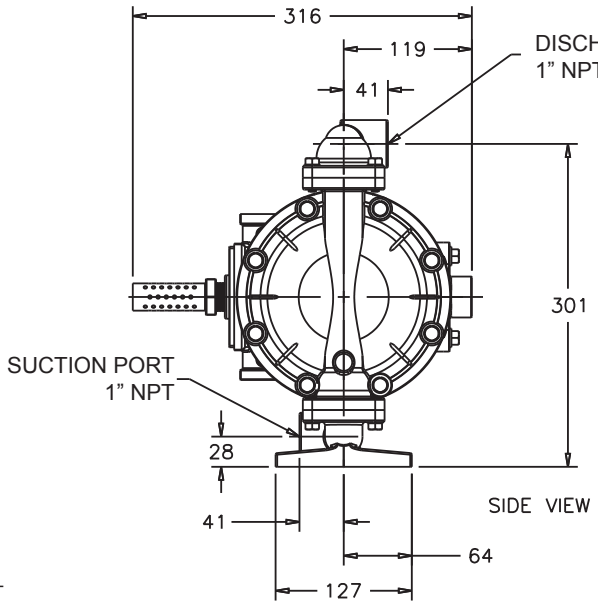

SIDE VIEW

SIDE VIEW

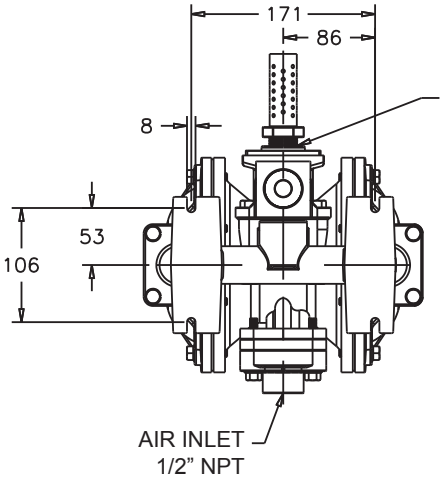

BOTTOM VIEW

WITH 530-033-000
MUFFLER

BOTH SUCTION AND
DISCHARGE PORTS ARE
AVAILABLE WITH
1" BSPT TAPERED THREADS

Principle of Pump Operation

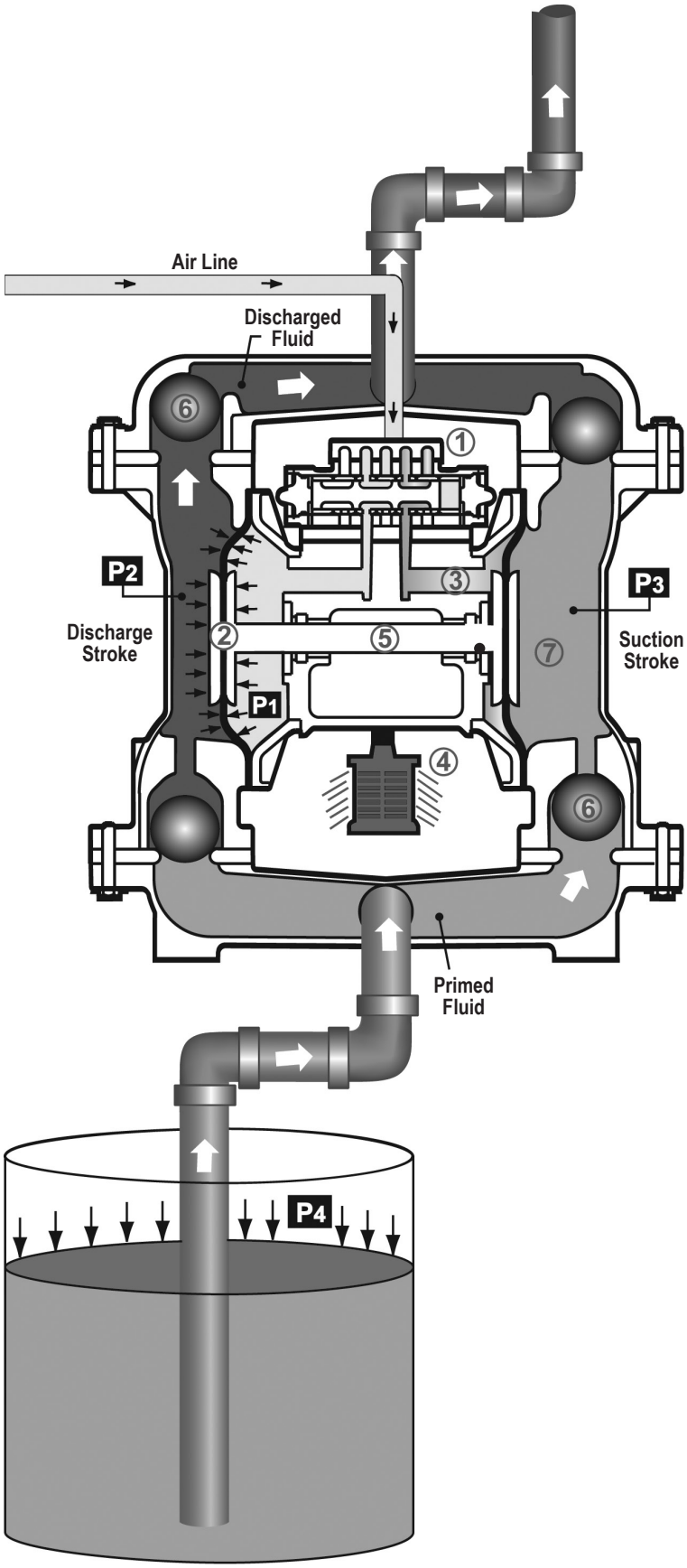

Air-Operated Double Diaphragm (AODD) pumps are powered by compressed air or nitrogen.

The main directional (air) control valve ① distributes compressed air to an air chamber, exerting uniform pressure over the inner surface of the diaphragm ②. At the same time, the exhausting air ③ from behind the opposite diaphragm is directed through the air valve assembly(s) to an exhaust port ④.

As inner chamber pressure **(P1)** exceeds liquid chamber pressure **(P2)**, the rod ⑤ connected diaphragms shift together creating discharge on one side and suction on the opposite side. The discharged and primed liquid's directions are controlled by the check valves (ball or flap)⑥ orientation.

The pump primes as a result of the suction stroke. The suction stroke lowers the chamber pressure **(P3)** increasing the chamber volume. This results in a pressure differential necessary for atmospheric pressure **(P4)** to push the fluid through the suction piping and across the suction side check valve and into the outer fluid chamber ⑦.

Suction (side) stroking also initiates the reciprocating (shifting, stroking or cycling) action of the pump. The suction diaphragm's movement is mechanically pulled through its stroke. The diaphragm's inner plate makes contact with an actuator plunger aligned to shift the pilot signaling valve. Once actuated, the pilot valve sends a pressure signal to the opposite end of the main directional air valve, redirecting the compressed air to the opposite inner chamber.

SUBMERGED ILLUSTRATION

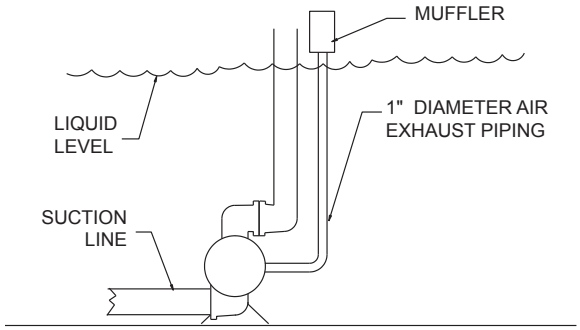

Pump can be submerged if the pump materials of construction are compatible with the liquid being pumped. The air exhaust must be piped above the liquid level. When the pumped product source is at a higher level than the pump (flooded suction condition), pipe the exhaust higher than the product source to prevent siphoning spills.

Recommended Installation Guide

Available Accessories:

1. Surge Suppressor
2. Filter/Regulator
3. Air Dryer
4. Lubricator

Note: Surge Suppressor and Piping, including air line, must be supported after the flexible connections.

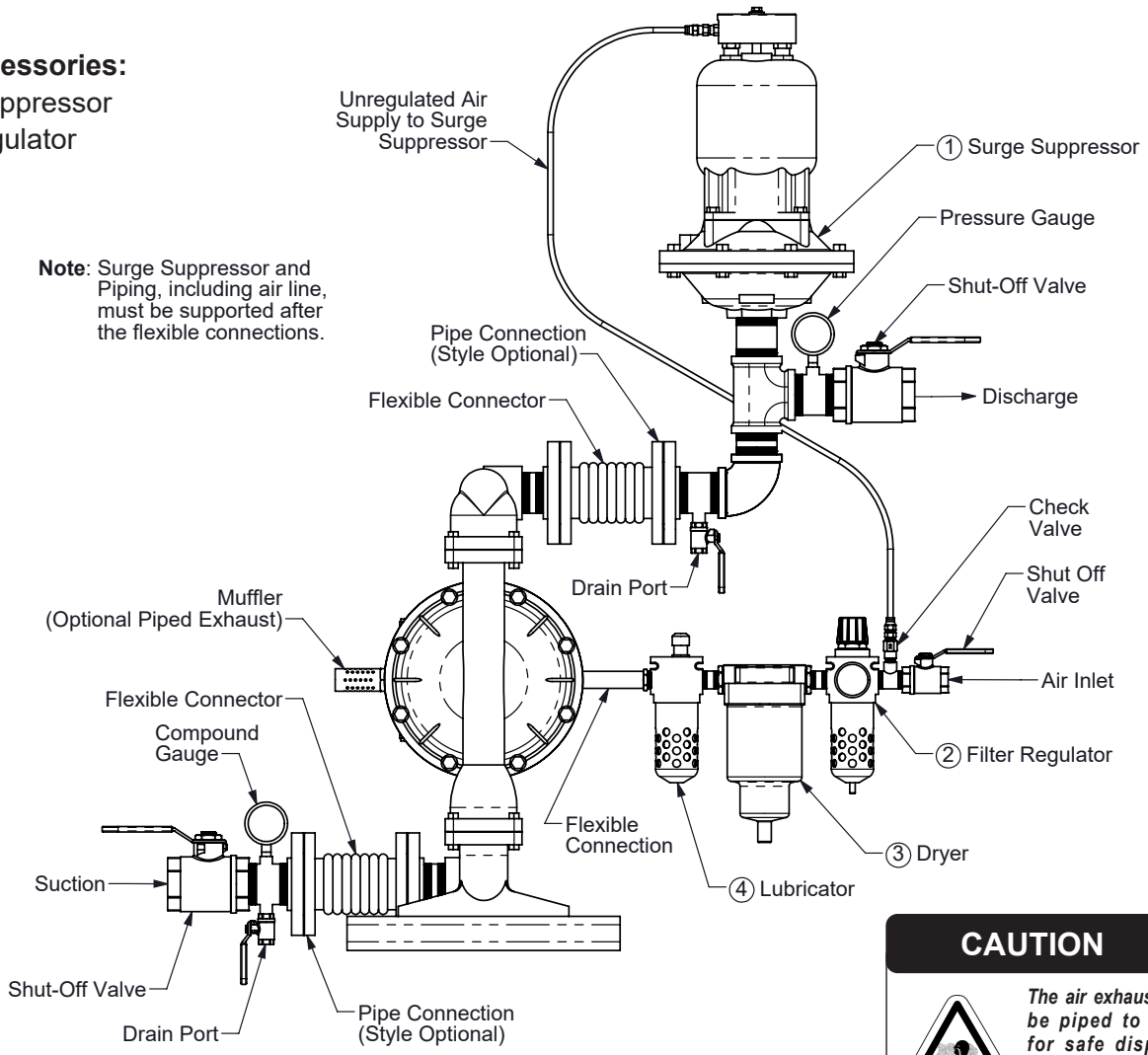

CAUTION

The air exhaust should be piped to an area for safe disposition of the product being pumped, in the event of a diaphragm failure.

Installation And Start-Up

Locate the pump as close to the product being pumped as possible. Keep the suction line length and number of fittings to a minimum. Do not reduce the suction line diameter.

Air Supply

Connect the pump air inlet to an air supply with sufficient capacity and pressure to achieve desired performance. A pressure regulating valve should be installed to insure air supply pressure does not exceed recommended limits.

Air Valve Lubrication

The air distribution system is designed to operate WITHOUT lubrication. This is the standard mode of operation. If lubrication is desired, install an air line lubricator set to deliver one drop of SAE 10 non-detergent oil for every 20 SCFM (9.4 liters/sec.) of air the pump consumes. Consult the Performance Curve to determine air consumption.

Air Line Moisture

Water in the compressed air supply may cause icing or freezing of the exhaust air, causing the pump to cycle erratically or stop operating. Water in the air supply can be reduced by using a point-of-use air dryer.

Air Inlet And Priming

To start the pump, slightly open the air shut-off valve. After the pump primes, the air valve can be opened to increase air flow as desired. If opening the valve increases cycling rate, but does not increase the rate of flow, cavitation has occurred. The valve should be closed slightly to obtain the most efficient air flow to pump flow ratio.

Troubleshooting Guide

Symptom:	Potential Cause(s):	Recommendation(s):
Pump Cycles Once	Deadhead (system pressure meets or exceeds air supply pressure).	Increase the inlet air pressure to the pump. Pump is designed for 1:1 pressure ratio at zero flow. (Does not apply to high pressure 2:1 units).
	Air valve or intermediate gaskets installed incorrectly.	Install gaskets with holes properly aligned.
	Bent or missing actuator plunger.	Remove pilot valve and inspect actuator plungers.
Pump Will Not Operate / Cycle	Pump is over lubricated.	Set lubricator on lowest possible setting or remove. Units are designed for lube free operation.
	Lack of air (line size, PSI, CFM).	Check the air line size and length, compressor capacity (HP vs. CFM required).
	Check air distribution system.	Disassemble and inspect main air distribution valve, pilot valve and pilot valve actuators.
	Discharge line is blocked or clogged manifolds.	Check for inadvertently closed discharge line valves. Clean discharge manifolds/piping.
	Deadhead (system pressure meets or exceeds air supply pressure).	Increase the inlet air pressure to the pump. Pump is designed for 1:1 pressure ratio at zero flow. (Does not apply to high pressure 2:1 units).
	Blocked air exhaust muffler.	Remove muffler screen, clean or de-ice, and re-install.
	Pumped fluid in air exhaust muffler.	Disassemble pump chambers. Inspect for diaphragm rupture or loose diaphragm plate assembly.
	Pump chamber is blocked.	Disassemble and inspect wetted chambers. Remove or flush any obstructions.
Pump Cycles and Will Not Prime or No Flow	Cavitation on suction side.	Check suction condition (move pump closer to product).
	Check valve obstructed. Valve ball(s) not seating properly or sticking.	Disassemble the wet end of the pump and manually dislodge obstruction in the check valve pocket. Clean out around valve ball cage and valve seat area. Replace valve ball or valve seat if damaged. Use heavier valve ball material.
	Valve ball(s) missing (pushed into chamber or manifold).	Worn valve ball or valve seat. Worn fingers in valve ball cage (replace part). Check Chemical Resistance Guide for compatibility.
	Valve ball(s) / seat(s) damaged or attacked by product.	Check Chemical Resistance Guide for compatibility.
	Check valve and/or seat is worn or needs adjusting.	Inspect check valves and seats for wear and proper setting. Replace if necessary.
	Suction line is blocked.	Remove or flush obstruction. Check and clear all suction screens or strainers.
	Excessive suction lift.	For lifts exceeding 20' of liquid, filling the chambers with liquid will prime the pump in most cases.
	Suction side air leakage or air in product.	Visually inspect all suction-side gaskets and pipe connections.
	Pumped fluid in air exhaust muffler.	Disassemble pump chambers. Inspect for diaphragm rupture or loose diaphragm plate assembly.
Pump Cycles Running Sluggish / Stalling, Flow Unsatisfactory	Over lubrication.	Set lubricator on lowest possible setting or remove. Units are designed for lube free operation.
	Icing.	Remove muffler screen, de-ice, and re-install. Install a point of use air drier.
	Clogged manifolds.	Clean manifolds to allow proper air flow.
	Deadhead (system pressure meets or exceeds air supply pressure).	Increase the inlet air pressure to the pump. Pump is designed for 1:1 pressure ratio at zero flow. (Does not apply to high pressure 2:1 units).
	Cavitation on suction side.	Check suction (move pump closer to product).
	Lack of air (line size, PSI, CFM).	Check the air line size, length, compressor capacity.
	Excessive suction lift.	For lifts exceeding 20' of liquid, filling the chambers with liquid will prime the pump in most cases.
	Air supply pressure or volume exceeds system hd.	Decrease inlet air (press. and vol.) to the pump. Pump is cavitating the fluid by fast cycling.
	Undersized suction line.	Meet or exceed pump connections.
	Restrictive or undersized air line.	Install a larger air line and connection.
	Suction side air leakage or air in product.	Visually inspect all suction-side gaskets and pipe connections.
	Suction line is blocked.	Remove or flush obstruction. Check and clear all suction screens or strainers.
	Pumped fluid in air exhaust muffler.	Disassemble pump chambers. Inspect for diaphragm rupture or loose diaphragm plate assembly.
	Check valve obstructed.	Disassemble the wet end of the pump and manually dislodge obstruction in the check valve pocket.
	Check valve and/or seat is worn or needs adjusting.	Inspect check valves and seats for wear and proper setting. Replace if necessary.
	Entrained air or vapor lock in chamber(s).	Purge chambers through tapped chamber vent plugs. Purging the chambers of air can be dangerous.
Product Leaking Through Exhaust	Diaphragm failure, or diaphragm plates loose.	Replace diaphragms, check for damage and ensure diaphragm plates are tight.
	Diaphragm stretched around center hole or bolt holes.	Check for excessive inlet pressure or air pressure. Consult Chemical Resistance Chart for compatibility with products, cleaners, temperature limitations and lubrication.
Premature Diaphragm Failure	Cavitation.	Enlarge pipe diameter on suction side of pump.
	Excessive flooded suction pressure.	Move pump closer to product. Raise pump/place pump on top of tank to reduce inlet pressure. Install Back pressure device (Tech bulletin 41r). Add accumulation tank or pulsation dampener.
	Misapplication (chemical/physical incompatibility).	Consult Chemical Resistance Chart for compatibility with products, cleaners, temperature limitations and lubrication.
	Incorrect diaphragm plates or plates on backwards, installed incorrectly or worn.	Check Operating Manual to check for correct part and installation. Ensure outer plates have not been worn to a sharp edge.
Unbalanced Cycling	Excessive suction lift.	For lifts exceeding 20' of liquid, filling the chambers with liquid will prime the pump in most cases.
	Undersized suction line.	Meet or exceed pump connections.
	Pumped fluid in air exhaust muffler.	Disassemble pump chambers. Inspect for diaphragm rupture or loose diaphragm plate assembly.
	Suction side air leakage or air in product.	Visually inspect all suction-side gaskets and pipe connections.
	Check valve obstructed.	Disassemble the wet end of the pump and manually dislodge obstruction in the check valve pocket.
	Check valve and/or seat is worn or needs adjusting.	Inspect check valves and seats for wear and proper setting. Replace if necessary.
	Entrained air or vapor lock in chamber(s).	Purge chambers through tapped chamber vent plugs.

For additional troubleshooting tips contact After Sales Support at service.warrenrupp@idexcorp.com or 419-524-8388

Composite Repair Parts Drawing

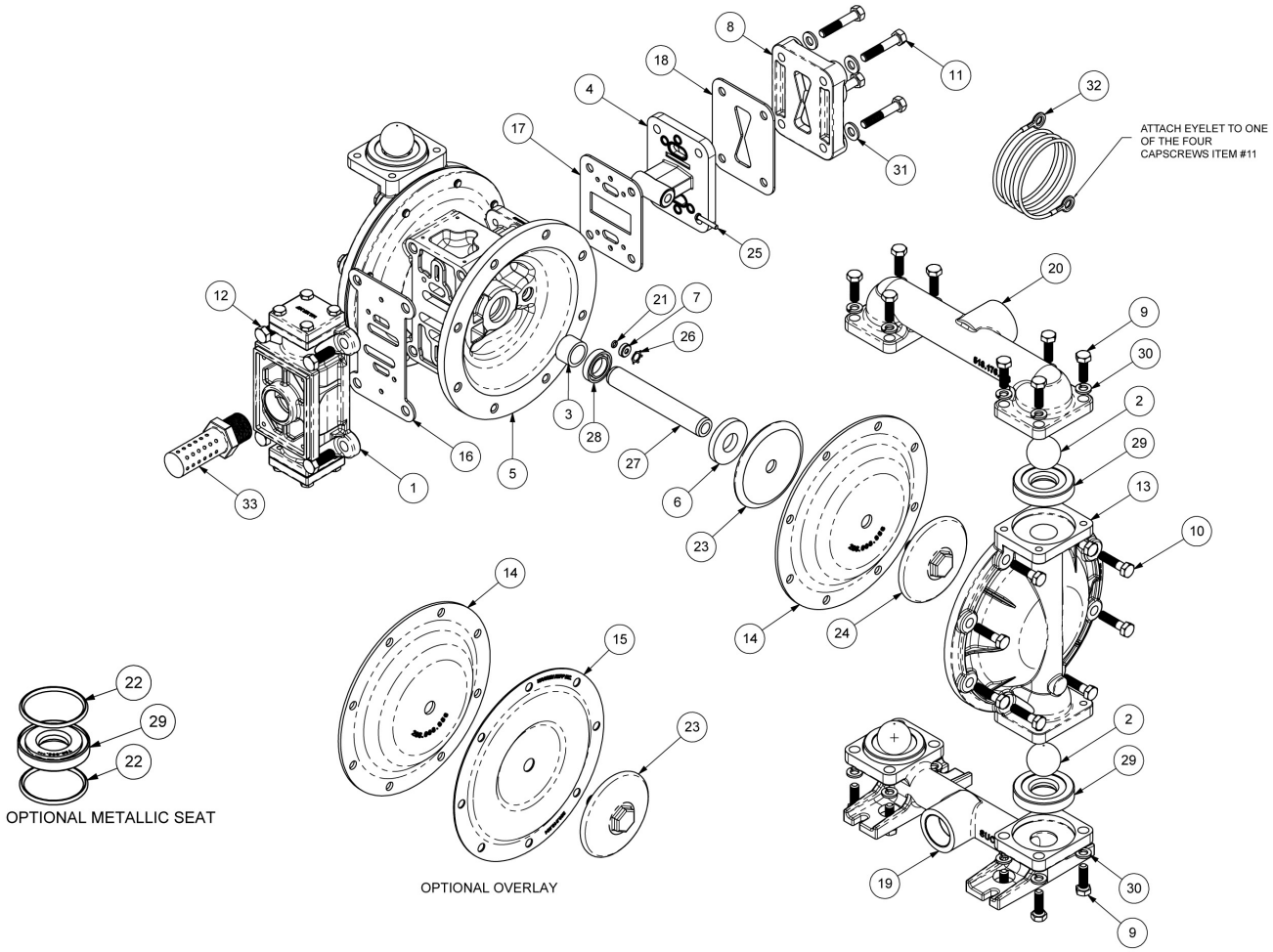

Service & Repair Kits

Add Kits:	AIR END KIT (Available Service Kits:)
476-230-000	**Air End Kit** Seals, O-Rings, Gaskets, Retaining Rings, Air Valve Assembly and Pilot Valve Assembly
476-213-760	**Wetted End Kit** Nitrile Diaphragms, Nitrile Check Balls and PTFE Check Valve Seats
476-213-635	**Wetted End Kit** Neoprene Backup Diaphragms, PTFE Overlay Diaphragms, PTFE Check Balls and PTFE Check Valve Seat
476-213-671	**Wetted End Kit** Neoprene Backup Diaphragms, PTFE Overlay Diaphragms, PTFE Check Balls and PTFE - Encapsulated FKM O-rings

Composite Repair Parts List

Item	Part Number	Description	Qty
1	031-183-000	Air Valve Assembly	1
2	050-028-760	Ball, Check	4
	050-028-600	Ball, Check	4
3	070-012-170	Bushing	2
4	095-110-000	Pilot Valve Assembly	1
5	114-025-157	Intermediate	1
6	132-019-357	Bumper	2
7	135-036-506	Bushing	2
8	165-120-157	Cap, Air Inlet Assembly	1
9	170-044-330	Capscrew, Hex Hd 5/16-18 X 1.00	16
10	170-045-330	Capscrew, Hex Hd 5/16-18 X 1.25	16
11	170-069-330	Capscrew, Hex Hd 5/16-18 X 1.75	4
12	170-006-330	Capscrew, Hex Hd 3/8-16 X 1.00	4
13	196-173-157	Chamber, Outer	2
14	286-008-760	Diaphragm	2
	286-008-365	Diaphragm	2
15	286-015-604	Diaphragm, Overlay	2
16	360-093-360	Gasket, Air Valve	1
17	360-114-360	Gasket, Pilot Valve	1
18	360-104-379	Gasket, Air Inlet	1
19	518-175-156	Manifold, Suction	1
	518-175-156E	Manifold, Suction 1" BSP Tapered	1
20	518-176-156	Manifold, Discharge	1
	518-176-156E	Manifold, Discharge 1" BSP Tapered	1
21	560-001-379	O-Ring	2
22	560-091-611	O-Ring (used with seat #722.098.150)	8
23	612-022-330	Plate, Inner Diaphragm	2
24	612-108-157	Plate, Outer Diaphragm Assembly	2
25	620-022-115	Pin, Actuator	2
26	675-042-115	Ring, Retaining	2
27	685-060-120	Rod, Diaphragm	1
28	720-010-360	Seal, U-Cup	2
29	722-098-600	Seat, Check Ball	4
	722.098.150	Seat, Check Ball	4
30	900-004-330	Lockwasher	16
31	901-038-330	Flatwasher	4
32	920-025-000	Ground Strap	1
33	530-033-000	Metal Muffler	1

Material Codes - The Last 3 Digits of Part Number

000.....Assembly, sub-assembly;
and some purchased items
010.....Cast Iron
015.....Ductile Iron
020.....Ferritic Malleable Iron
080.....Carbon Steel, AISI B-1112
110.....Alloy Type 316 Stainless Steel
111.....Alloy Type 316 Stainless Steel
(Electro Polished)
112.....Alloy C
113.....Alloy Type 316 Stainless Steel
(Hand Polished)
114.....303 Stainless Steel
115.....302/304 Stainless Steel
117.....440-C Stainless Steel (Martensitic)
120.....416 Stainless Steel
(Wrought Martensitic)
148.....Hardcoat Anodized Aluminum
150.....6061-T6 Aluminum
152.....2024-T4 Aluminum (2023-T351)
155.....356-T6 Aluminum
156.....356-T6 Aluminum
157.....Die Cast Aluminum Alloy #380
158.....Aluminum Alloy SR-319
162.....Brass, Yellow, Screw Machine Stock
165.....Cast Bronze, 85-5-5-5
166.....Bronze, SAE 660
170.....Bronze, Bearing Type,
Oil Impregnated
180.....Copper Alloy
305.....Carbon Steel, Black Epoxy Coated
306.....Carbon Steel, Black PTFE Coated
307.....Aluminum, Black Epoxy Coated
308.....Stainless Steel, Black PTFE Coated
309.....Aluminum, Black PTFE Coated
313.....Aluminum, White Epoxy Coated
330.....Zinc Plated Steel
332.....Aluminum, Electroless Nickel Plated
333.....Carbon Steel, Electroless
Nickel Plated
335.....Galvanized Steel
337.....Silver Plated Steel
351.....Food Grade Santoprene®
353.....Geolast; Color: Black
354.....Injection Molded #203-40
Santoprene® Duro 40D +/-5;
Color: RED
356.....Hytrel®
357.....Injection Molded Polyurethane
358.....Urethane Rubber
(Some Applications)
(Compression Mold)
359.....Urethane Rubber
360.....Nitrile Rubber Color coded: RED
363.....FKM (Fluorocarbon)
Color coded: YELLOW
364.....EPDM Rubber
Color coded: BLUE
365.....Neoprene Rubber
Color coded: GREEN
366.....Food Grade Nitrile
368.....Food Grade EPDM
371.....Philthane (Tuftane)
374.....Carboxylated Nitrile
375.....Fluorinated Nitrile
378.....High Density Polypropylene
379.....Conductive Nitrile
408.....Cork and Neoprene
425.....Compressed Fibre
426.....Blue Gard
440.....Vegetable Fibre
500.....Delrin® 500
502.....Conductive Acetal, ESD-800
503.....Conductive Acetal, Glass-Filled
506.....Delrin® 150
520.....Injection Molded PVDF
Natural color
540.....Nylon
542.....Nylon
544.....Nylon Injection Molded
550.....Polyethylene
551.....Glass Filled Polypropylene
552.....Unfilled Polypropylene
555.....Polyvinyl Chloride
556.....Black Vinyl
557.....Unfilled Conductive Polypropylene
558.....Conductive HDPE
559.....Glass Filled - Conductive Polypropylene
558.....Conductive HDPE
570.....Rulon II®
580.....Ryton®
600.....PTFE (virgin material)
Tetrafluorocarbon (TFE)
603.....Blue Gylon®
604.....PTFE
606.....PTFE
607.....Envelon
608.....Conductive PTFE
610.....PTFE Encapsulated Silicon
611.....PTFE Encapsulated FKM
632.....Neoprene/Hytrel®
633.....FKM/PTFE
634.....EPDM/PTFE
635.....Neoprene/PTFE
637.....PTFE, FKM/PTFE
638.....PTFE, Hytrel®/PTFE
639.....Nitrile/TFE
643.....Santoprene®/EPDM
644.....Santoprene®/PTFE
656.....Santoprene® Diaphragm and
Check Balls/EPDM Seats
661.....EPDM/Santoprene®
666.....FDA Nitrile Diaphragm,
PTFE Overlay, Balls, and Seals
668.....PTFE, FDA Santoprene®/PTFE

- Delrin and Hytrel are registered tradenames of E.I. DuPont.
- Nylatron is a registered tradename of Polymer Corp.
- Gylon is a registered tradename of Garlock, Inc.
- Santoprene is a registered tradename of Exxon Mobil Corp.
- Rulon II is a registered tradename of Dixion Industries Corp.
- Ryton is a registered tradename of Phillips Chemical Co.
- Valox is a registered tradename of General Electric Co.

RECYCLING

Warren Rupp is an ISO14001 registered company and is committed to minimizing the impact our products have on the environment. Many components of SANDPIPER® AODD pumps are made of recyclable materials. We encourage pump users to recycle worn out parts and pumps whenever possible, after any hazardous pumped fluids are thoroughly flushed. Pump users that recycle will gain the satisfaction to know that their discarded part(s) or pump will not end up in a landfill. The recyclability of SANDPIPER products is a vital part of Warren Rupp's commitment to environmental stewardship.

Air Distribution Valve Assembly

ATEX Compliant

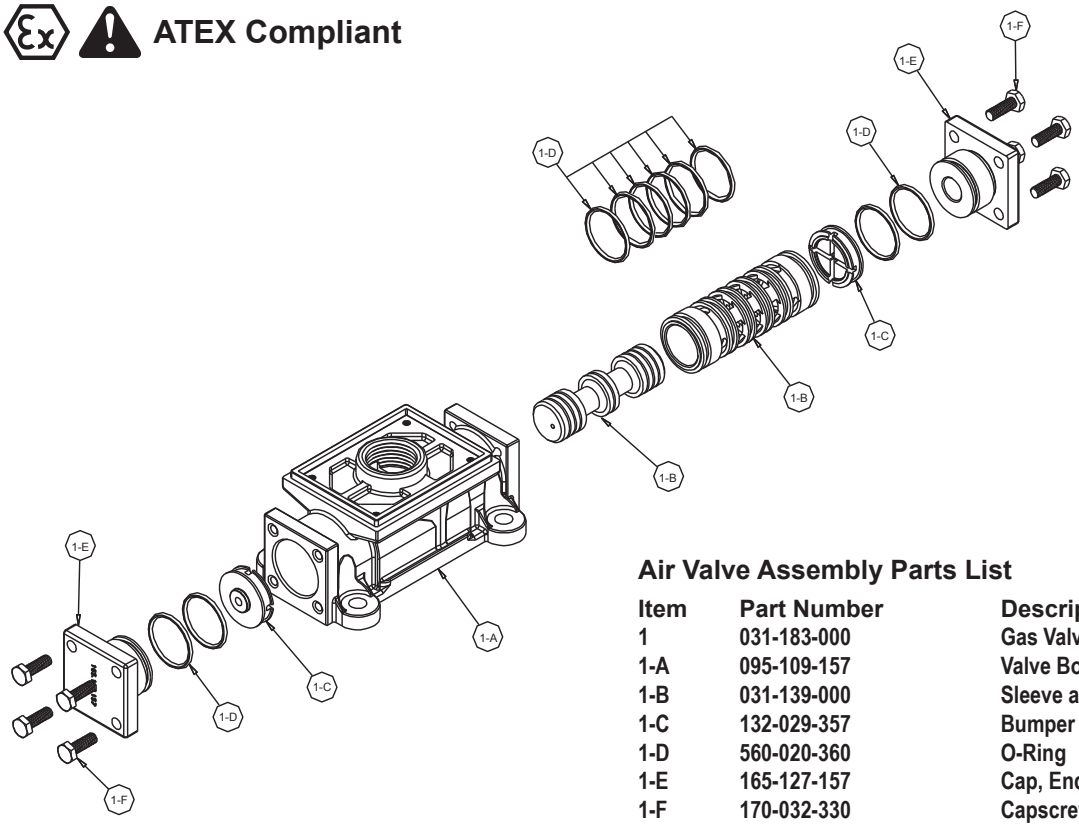

Air Valve Assembly Parts List

Item	Part Number	Description	Qty
1	031-183-000	Gas Valve Assembly	1
1-A	095-109-157	Valve Body	1
1-B	031-139-000	Sleeve and Spool Set	1
1-C	132-029-357	Bumper	2
1-D	560-020-360	O-Ring	10
1-E	165-127-157	Cap, End	2
1-F	170-032-330	Capscrew	8

IMPORTANT

Read these instructions completely, before installation and start-up. It is the responsibility of the purchaser to retain this manual for reference. Failure to comply with the recommendations stated in this manual will damage the pump, and void factory warranty.

AIR DISTRIBUTION VALVE SERVICING

To service the air valve first shut off the compressed air, bleed pressure from the pump, and disconnect the air supply line from the pump.

STEP #1: See COMPOSITE REPAIR PARTS DRAWING.

Using a 9/16" wrench or socket, remove the four hex head capscrews (item 10). Remove the air valve assembly from the pump.

Remove and inspect gasket (item 16) for cracks or damage. Replace gasket if needed.

STEP #2: Disassembly of the air valve.

Using a 7/16" wrench or socket, remove the eight hex caprscrews (item 1-F) that fasten the end caps to the valve body.

Next remove the two end caps (items 1-E). Inspect two o-rings (items 1-D) on each end cap for damage or wear. Replace the o-rings as needed.

Remove the bumpers (items 1-C). Inspect the bumpers for damage or wear.

Remove the spool (part of item 1-A) from the sleeve. Be careful not to scratch or damage the outer diameter of the spool. Wipe spool with a soft cloth and inspect for scratches or wear.

Inspect the inner diameter of the sleeve (part of item 1-A) for dirt, scratches, or other contaminants. Remove the sleeve if needed and replace with a new sleeve and spool set (item 1-A).

STEP #3: Reassembly of the air valve.

Install one bumper (item 1-C) and one end cap (item 1-E) with two o-rings (item 1-D) and fasten with four hex capscrews (items (1-F) to the valve body (items 1-A).

Remove the new sleeve an spool set (item 1-A) from the plastic bag. Carefully remove the spool from the sleeve. Install the six o-rings (item 1-G) into the six grooves on the sleeve. Apply a light coating of grease to the o-rings before installing the sleeve into the valve body (item 1-B), align the slots in the sleeve with the slots in the valve body. Insert the spool into the sleeve. Be careful not to scratch or damage the spool during installation. Push the spool in until it touches the bumper on the opposite end.

Install the remaining bumper, end cap (with o-rings), and fasten with the remaining hex capscrews.

Fasten the air valve assembly (item 1) and gasket (item 16) to the pump.

Connect the compressed air line to the pump. The pump is now ready for operation.

****Note: Pumps equipped with these Valve Assemblies are <u>not</u> ATEX compliant.**

Pilot Valve Assembly

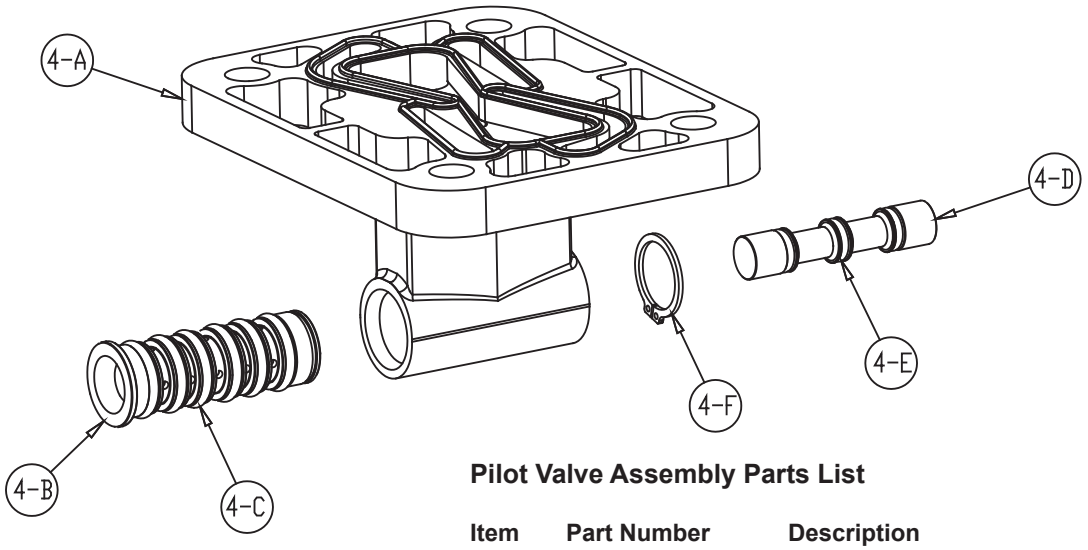

Pilot Valve Assembly Parts List

Item	Part Number	Description	Qty
4	095-110-000	Pilot Valve Assembly	1
4-A	095-095-157	Valve Body	1
4-B	755-052-000	Sleeve (With O-rings)	1
4-C	560-033-360	O-ring (Sleeve)	6
4-D	775-055-000	Spool (With O-rings)	1
4-E	560-023-360	O-ring (Spool)	3
4-F	675-037-080	Retaining Ring	1

For Pumps with Cast Iron Center Section

Item	Part Number	Description	Qty
4	095.110.558	Pilot Valve Assembly	1
4-A	095.095.558	Valve Body	1

(includes all other items used on 095.110.000)

ATEX Compliant

Pilot Valve Servicing

To service the pilot valve first shut off the compressed air supply, bleed the pressure from the pump, and disconnect the air supply line from
the pump.

STEP #1: See pump assembly drawing.
Using a 1/2" wrench or socket, remove the four capscrews (item 12). Remove the air inlet cap (item 8) and air inlet gasket (item 18). The pilot valve assembly (item 4) can now be removed for inspection and service.
STEP #2: Disassembly of the
pilot valve.
Remove the pilot valve spool (item 4-D). Wipe clean and inspect spool and o-rings for dirt, cuts or wear. Replace the o-rings and spool if necessary.
Remove the retaining ring (item 4-F) from the end of the sleeve (item 4-B) and remove the sleeve from the valve body (item 4-A).

Wipe clean and inspect sleeve and o-rings for dirt, cuts or wear. Replace the o-rings and sleeve if necessary.

STEP #3: Re-assembly of the
pilot valve.
Generously lubricate outside diameter of the sleeve and o-rings. Then carefully insert sleeve into valve body. Take CAUTION when inserting sleeve, not to shear any o-rings. Install retaining ring to sleeve. Generously lubricate outside diameter of spool and o-rings. Then carefully insert spool into sleeve. Take CAUTION when inserting spool, not to shear any o-rings. Use BP-LS-EP-2 multipurpose grease, or equivalent.

STEP #4: Re-install the pilot valve assembly into the intermediate.
Be careful to align the ends of the pilot valve stem between the plunger pins when inserting the pilot valve into the cavity of the intermediate. Re-install the gasket, air inlet cap and capscrews. Connect the air supply to the pump. The pump is now ready for operation.

Diaphragm Service Drawing, with Overlay

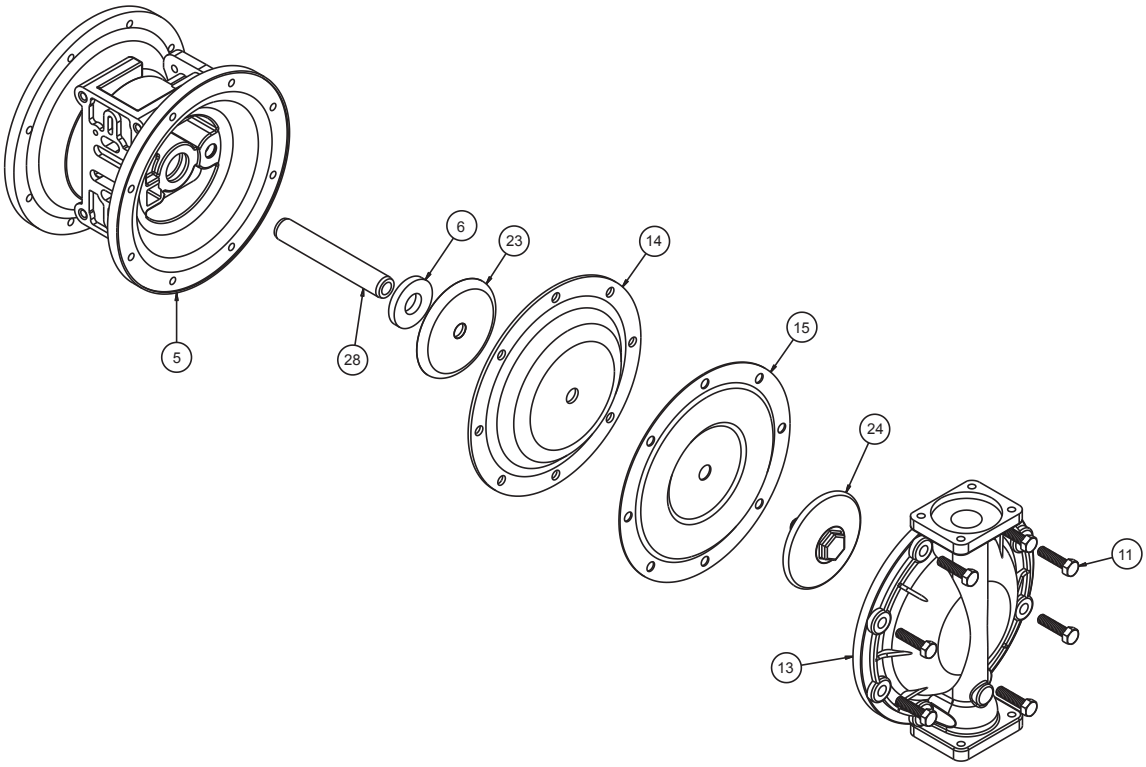

Diaphragm Service Drawing, Non-Overlay

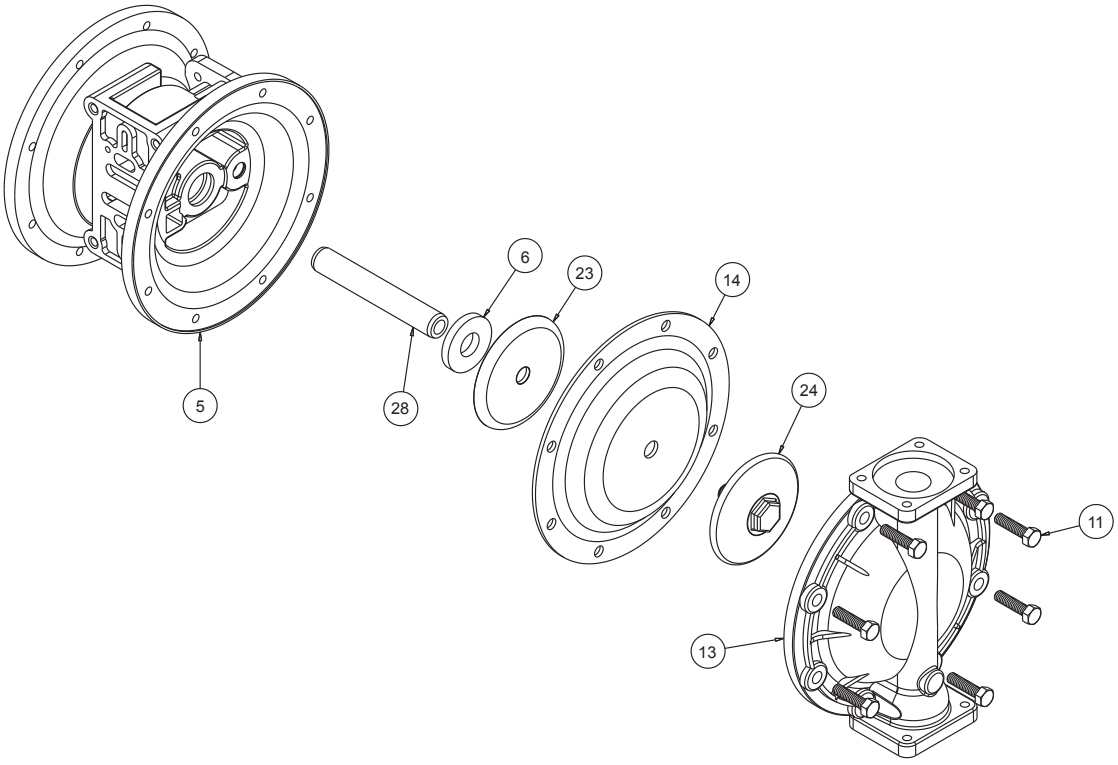

Diaphragm Servicing

To service the diaphragms first shut off the suction, then shut off the discharge lines to the pump. Shut off the compressed air supply, bleed the pressure from the pump and disconnect the air supply line from the pump. Drain any remaining liquid from the pump.

Step #1: See the pump assembly drawing and the diaphragm servicing illustration.

Using a 1/2" wrench or socket, remove the 16 capscrews (item 9) that fasten the manifolds (items 19 & 20) to the outer chambers (item 13).

Step #2: Removing outer chambers.

Using a 1/2" wrench or socket, remove the 16 capscrews (item 11), that fasten the outer chambers (item 13), diaphragms (item 14) and intermediate (item 5) together.

Step #3: Removing the diaphragms and diaphragm plates.

Use a 7/8" wrench or six point socket to remove the outer diaphragm plate assemblies (item 24), diaphragms (item 14) and inner diaphragm plates (item 23) from the diaphragm rod (item 28) by turning counterclockwise. Inspect the diaphragm for cuts, punctures, abrasive wear or chemical attack. Replace the diaphragms if necessary. DO NOT USE A WRENCH ON THE DIAPHRAGM ROD. FLAWS ON THE SURFACE MAY DAMAGE BEARINGS AND SEALS.

Step #4: Assembling the diaphragm and diaphragm plates to the diaphragm rod.

Push the threaded stud of one outer diaphragm plate assembly through the center of one diaphragm and through one inner diaphragm plate. Install the diaphragm with the natural bulge facing away from the diaphragm rod and make sure the radius on the inner diaphragm plate is towards the diaphragm, as indicated on the diaphragm servicing illustration. Thread the assembly onto the diaphragm rod, leaving loose.

Step #5: Installing the diaphragm and rod assembly to the pump.

Make sure the bumper (item 6) is installed over the diaphragm rod. Insert rod into pump.

On the opposite side of the pump, pull the diaphragm rod out as far as possible. Make sure the second bumper is installed over the diaphragm rod.

Push the threaded stud of the other outer diaphragm plate assembly through the center of the other diaphragm and through the other inner diaphragm plate. Make sure the radius on the inner diaphragm plate is towards the diaphragm. Thread the assembly onto the diaphragm rod. Use a 7/8" wrench or socket to hold one outer diaphragm plate. Then, use a torque wrench to tighten the other outer diaphragm plate to the diaphragm rod to 350 in. lbs. (39.5 Newton meters).

Align one diaphragm with the intermediate and install the outer chamber to the pump using the 8 capscrews. Tighten the opposite diaphragm plate until the holes in the diaphragm align with the holes in the intermediate. Then, install the other outer chamber using the 8 capscrews.

Step #6: Reinstall the manifolds to the pump using the 16 capscrews.

The pump is now ready to be reinstalled, connected and returned to operation.

OVERLAY DIAPHRAGM SERVICING

The overlay diaphragm (item 15) is designed to fit over the exterior of the standard diaphragm (item 14).

Follow the same procedures described for the standard diaphragm for removal and installation, except tighten the outer diaphragm plate assembly, diaphragms and inner diaphragm plate to the diaphragm rod to 350 in. lbs. (39.5 Newton meters).

⚠ IMPORTANT



Read these instructions completely, before installation and start-up. It is the responsibility of the purchaser to retain this manual for reference. Failure to comply with the recommendations stated in this manual will damage the pump, and void factory warranty.

ACTUATOR PLUNGER SERVICING

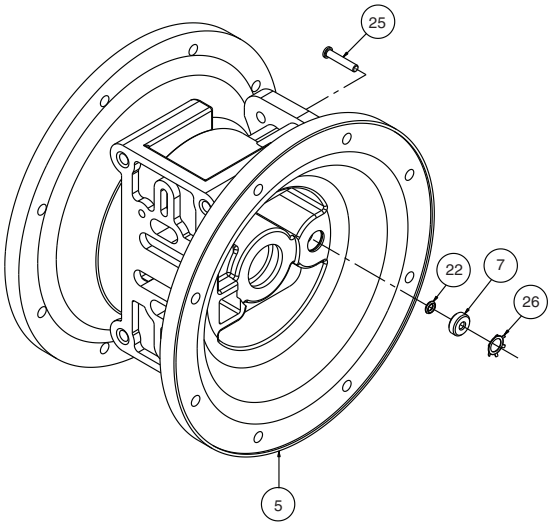

ACTUATOR PLUNGER SERVICING

To service the actuator plunger first shut off the compressed air supply, bleed the pressure from the pump, and disconnect the air supply line from the pump.

Step #1: See PUMP ASSEMBLY DRAWING.

Using a 1/2" wrench or socket, remove the four capscrews (items 11). Remove the air inlet cap (item 8) and air inlet gasket (item 18). The pilot valve assembly (item 4) can now be removed.

Step #2: Inspect the actuator plungers.

See ILLUSTRATION AT RIGHT.

The actuator plungers (items 25) can be reached through the pilot valve cavity in the intermediate assembly (item 5).

Remove the plungers (item 25) from the bushings (item 7) in each end of the cavity. Inspect the installed o-ring (items 22) for cuts and/or wear. Replace the o-rings if necessary. Apply a light coating of grease to each o-ring and re-install the plungers in to the bushings. Push the plungers in as far as they will go.

To remove the bushings (item 7), first remove the retaining rings (item 26) by using a flat screwdriver. NOTE: It is recommended that new retaining rings be installed.

Step #3: Re-install the pilot valve assembly into the intermediate assembly.

Be careful to align the ends of the stem between the plungers when inserting the stem of the pilot valve into the cavity of the intermediate.

Re-install the gasket (item 18), air inlet cap (item 8) and capscrews (item 11).

Connect the air supply to the pump. The pump is now ready for operation.



⚠ IMPORTANT

Read these instructions completely, before installation and start-up. It is the responsibility of the purchaser to retain this manual for reference. Failure to comply with the recommendations stated in this manual will damage the pump, and void factory warranty.

Check Valve Drawing

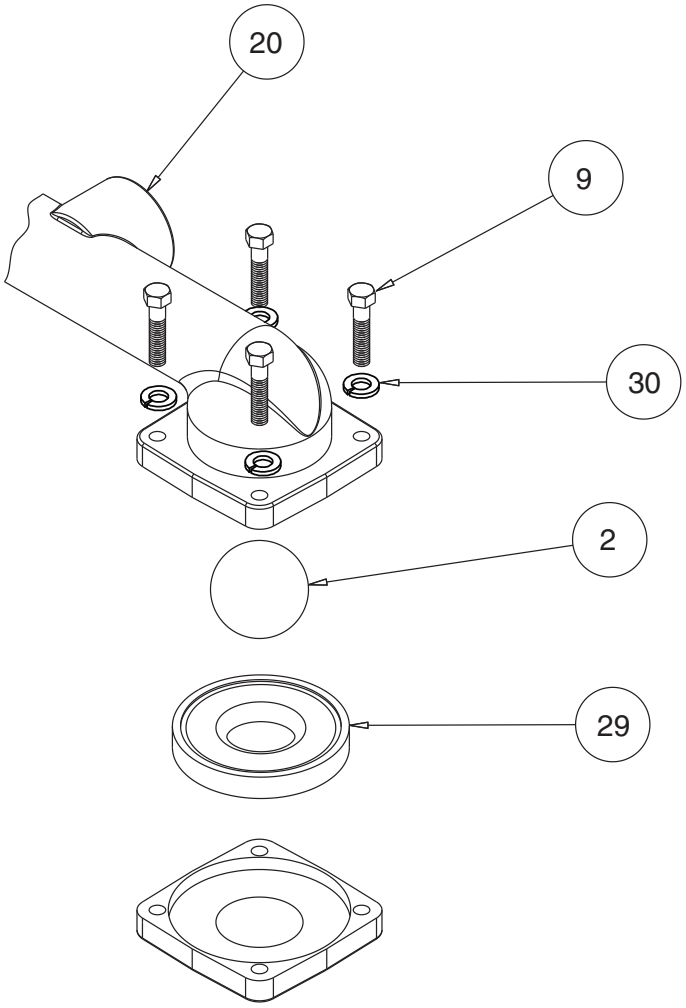

with Non-Metallic Seats

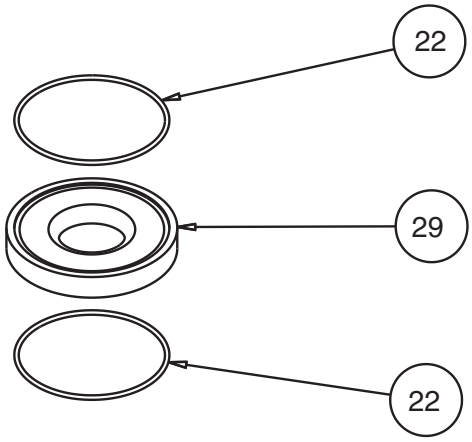

with Metallic Seats

CHECK VALVE SERVICING

Before servicing the check valve components, first shut off the suction line and then the discharge line to the pump. Next, shut off the compressed air supply, bleed air pressure from the pump, and disconnect the air supply line from the pump. Drain any remaining fluid from the pump. The pump can now be removed for service.

To access the check valve components, remove the manifold (item 20 or item 19 not shown). Use a 1/2" wrench or socket to remove the fasteners. Once the manifold is removed, the check valve components can be seen.

Inspect the check balls (items 2) for wear, abrasion, or cuts on the spherical surface. The check valve seats (item 30) should be inspected for cuts, abrasive wear, or embedded material on the surfaces of both the external and internal chambers. The spherical surface of the check balls must seat flush to the surface of the check valve seats for the pump to operate to peak efficiency. Replace any worn or damaged parts as necessary.

Re-assemble the check valve components. The seat should fit into the counter bore of the outer chamber.

The pump can now be reassembled, reconnected and returned to operation.

METALLIC SEATS

Two o-rings (item 22) are required for each metallic seats.

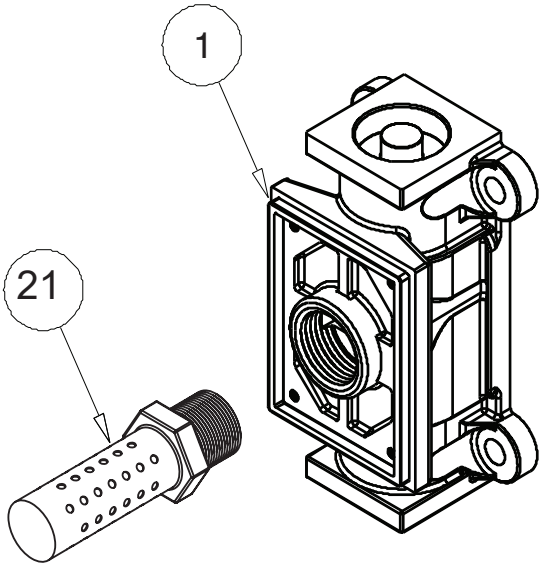

The pump comes equipped with a standard metal muffler

CONVERTED EXHAUST ILLUSTRATION

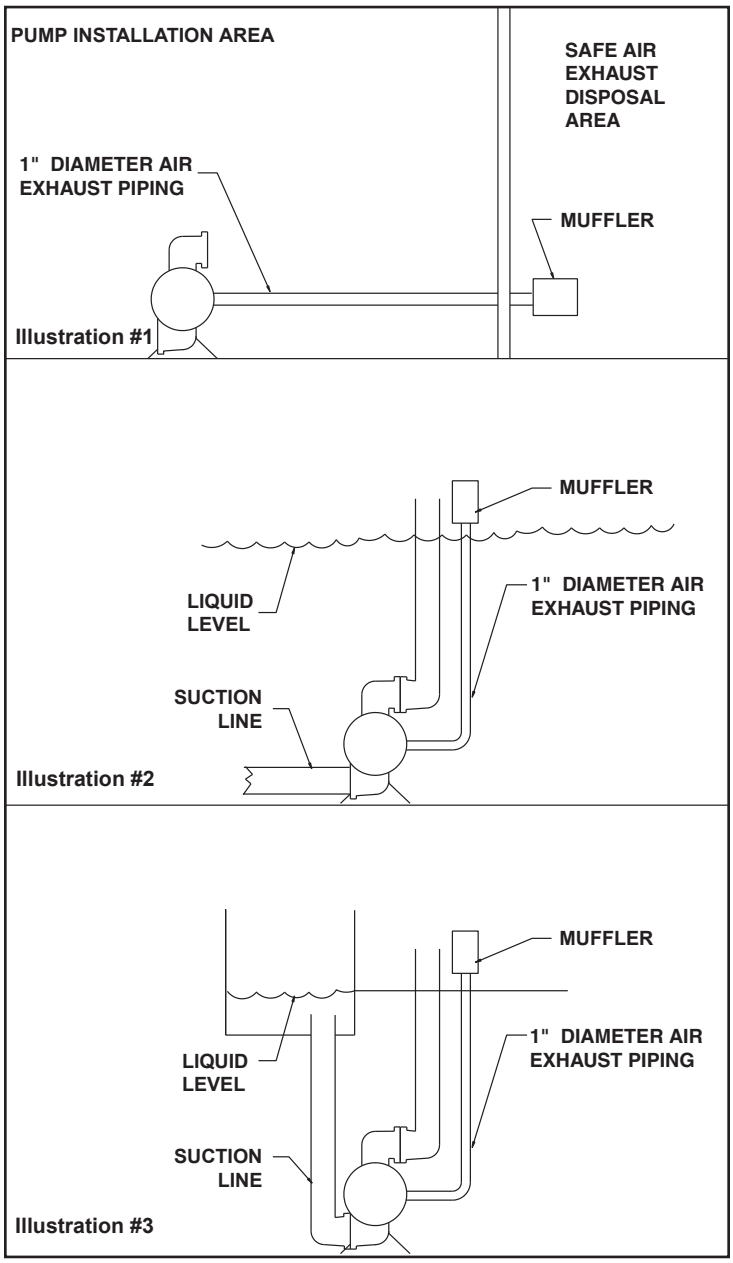

PUMPING HAZARDOUS LIQUIDS

When a diaphragm fails, the pumped liquid or fumes enter the air end of the pump. Fumes are exhausted into the surrounding environment. When pumping hazardous or toxic materials, the exhaust air must be piped to an appropriate area for safe disposal. See illustration #1 at right.

This pump can be submerged if the pump materials of construction are compatible with the liquid being pumped. The air exhaust must be piped above the liquid level. See illustration #2 at right. Piping used for the air exhaust must not be smaller than 1" (2.54 cm) diameter. Reducing the pipe size will restrict air flow and reduce pump performance. When the pumped product source is at a higher level than the pump (flooded suction condition), pipe the exhaust higher than the product source to prevent siphoning spills. See illustration #3 at right.

CONVERTING THE PUMP FOR PIPING THE EXHAUST AIR

The following steps are necessary to convert the pump to pipe the exhaust air away from the pump.

Remove the muffler (item 21). The air distribution valve (item 1) has 1" NPT threads for piped exhaust.

IMPORTANT INSTALLATION NOTE: The manufacturer recommends installing a flexible conductive hose or connection between the pump and any rigid plumbing. This reduces stresses on the molded threads of the air exhaust port. Failure to do so may result in damage to the air distribution valve body.

Any piping or hose connected to the pump's air exhaust port must be conductive and physically supported. Failure to support these connections could also result in damage to the air distribution valve body.

5 - YEAR Limited Product Warranty

Warren Rupp, Inc. ("Warren Rupp") warrants to the original end-use purchaser that no product sold by Warren Rupp that bears a Warren Rupp brand shall fail under normal use and service due to a defect in material or workmanship within five years from the date of shipment from Warren Rupp's factory. Warren Rupp brands include Warren Rupp®,SANDPIPER®, SANDPIPER Signature Series™, MARATHON®, Porta-Pump®, SludgeMaster™ and Tranquilizer®.

The use of non-OEM replacement parts will void (or negate) agency certifications, including CE, ATEX, CSA, 3A and EC1935 compliance (Food Contact Materials). Warren Rupp, Inc. cannot ensure nor warrant non-OEM parts to meet the stringent requirements of the certifying agencies.

~ See complete warranty at https://www.sandpiperpump.com/

SANDPIPER®

EC Declaration of Conformity

Manufacturer:
Warren Rupp, Inc.
800 N. Main Street
Mansfield, Ohio, 44902 USA

Certifies that Air-Operated Double Diaphragm Pump Models: DSB Series, DMF Series, G Series, HDB Series, HDF Series, HP Series, F Series, MS Series, S Series, SL Series, SP Series, SSB Series, T Series, U1F Series, WR Series; High Pressure Pump Models: EH Series, GH Series, SH Series; Submersible Pump Models: SMA3 Series, SPA Series; and Surge Dampener/ Suppressor Models: DA Series, TA Series comply with the European Community Directive 2006/42/EC on Machinery, according to Annex VIII. This product has used Harmonized Standard EN809:2012, Pumps and Pump Units for Liquids - Common Safety Requirements, to verify conformance.

October 3, 2022
DATE/APPROVAL/TITLE:

Technical File on record with:
DEKRA Certification B.V.
Meander 1051
6825 MJ Arnhem
The Netherlands

Signature of authorized person

Dennis Hall
Printed name of authorized person

Engineering Manager
Title

IDEX

CE

SANDPIPER®

EC Declaration of Conformity

Manufacturer:
Warren Rupp, Inc.
800 N. Main Street
Mansfield, Ohio, 44902 USA

Certifies that Air-Operated Double Diaphragm Pump Models: DSB Series, DMF Series, G Series, HDB Series, HDF Series, HP Series, F Series, MS Series, S Series, SL Series, SP Series, SSB Series, T Series, U1F Series, WR Series; High Pressure Pump Models: EH Series, GH Series, SH Series; Submersible Pump Models: SMA3 Series, SPA Series; and Surge Dampener/ Suppressor Models: DA Series, TA Series comply with the United Kingdom Statutory Instruments 2008 No. 1597, The Supply of Machinery (Safety) Regulations 2008, according to Annex VIII. This product has used Designated Standard EN809:2012, Pumps and Pump Units for Liquids - Common Safety Requirements, to verify conformance.

October 17, 2022
DATE/APPROVAL/TITLE:

Technical File on record with:
DEKRA Certification UK Limited
Stokenchurch House
Oxford Road
Stokenchurch
HP14 3SX


Signature of authorized person

Dennis Hall
Printed name of authorized person

Engineering Manager
Title

IDEX

UK CA

SANDPIPER®

ATEX

IDEX

EU Declaration of Conformity

Manufacturer:

Warren Rupp, Inc.
A Unit of IDEX Corporation
800 North Main Street
Mansfield, OH 44902 USA

This declaration of conformity is issued under the sole responsibility of the manufacturer. Warren Rupp, Inc. declares that Air Operated Double Diaphragm Pumps (AODD) and Surge Suppressors listed below comply with the requirements of Directive **2014/34/EU** and applicable harmonized standards.

Harmonized Standards:

- EN ISO 80079-36: 2016
- EN ISO 80079-37: 2016
- EN 60079-25: 2010

1. AODD Pumps and Surge Suppressors - Technical File on record with: DEKRA Certification B.V.
Meander 1051
6825 MJ Arnhem
The Netherlands

Hazardous Location Applied:

Ⓔx II 2 G Ex h IIC T5...225°C (T2) Gb
II 2 D Ex h IIIC T100°C...T200°C Db

- Metallic pump models with external aluminum components (DMF Series, EH Series, F Series, G & GH Series, HDB Series, HDF Series, MS Series, S Series, SH Series, SL Series, SP Series, ST Series, T Series, and U1F Series)
- Conductive plastic pump models with integral muffler (PB Series, S Series, SL Series, SP Series)
- Tranquilizer® surge suppressors (TA Series)

Ⓔx II 2 G Ex h IIB T5...225°C (T2) Gb
II 2 D Ex h IIIB T100°C...T200°C Db

- ST Series with sight tubes (VL) and HP Series because of the projected area of non-conductive external components

2. AODD Pumps - EU Type Examination Certificate No.: DEKRA 18ATEX0094X - DEKRA Certification B.V. (0344)
Meander 1051
6825 MJ Arnhem
The Netherlands

Hazardous Location Applied:

Ⓔx I M1 Ex h I Ma
II 1 G Ex h IIC T5...225°C (T2) Ga
II 1 D Ex h IIIC T100°C...T200°C Da

- Metallic pump models with no external aluminum (S series, HDB Series, HDF Series, G Series)
- Conductive plastic pumps equipped with metal muffler (S series, PB Series)

Ⓔx II 2 G Ex h ia IIC T5 Gb
II 2 D Ex h ia IIIC T100°C Db

- All pump model series excluding G15, G20,G30 equipped with ATEX rated pulse output option

Ⓔx II 2 G Ex h mb IIC T5 Gb
II 2 D Ex h mb tb IIIC T100° Db

- Pump model series S05, S1F, S15, S20, S30 equipped with ATEX rated integral solenoid option

➢ See “ATEX Details” page in user’s manual for more information
➢ See “Safety Information” page for conditions of safe use

DATE/APPROVAL/TITLE:
03 OCT 2022

Dennis Hall
Engineering Manager

SANDPIPER®

UKEx

IDEX

EU Declaration of Conformity

Manufacturer:

Warren Rupp, Inc.
A Unit of IDEX Corporation
800 North Main Street
Mansfield, OH 44902 USA

This declaration of conformity is issued under the sole responsibility of the manufacturer.
Warren Rupp, Inc declares that Air Operated Double Diaphragm Pumps (AODD) and Surge Suppressors listed below comply with the requirements of United Kingdom Statutory Instruments **2016 No. 1107** and all the applicable standards.

Designated Standards:

- EN ISO 80079-36: 2016
- EN ISO 80079-37: 2016
- EN 60079-25: 2010

1. AODD Pumps and Surge Suppressors - Technical File on record with: DEKRA Certification UK Limited
Stokenchurch House
Oxford Road
Stokenchurch
HP14 3SX

Hazardous Location Applied:



II 2 G Ex h IIC T5...225°C (T2) Gb
II 2 D Ex h IIIC T100°C...T200°C Db

- Metallic pump models with external aluminum components (DMF Series, EH Series, F Series, G & GH Series, HDB Series, HDF Series, MS Series, S Series, SH Series, SL Series, SP Series, ST Series, T Series, and U1F Series)
- Conductive plastic pump models with integral muffler (PB Series, S Series, SL Series, SP Series)
- Tranquilizer® surge suppressors (TA Series)



II 2 G Ex h IIB T5...225°C (T2) Gb
II 2 D Ex h IIIB T100°C...T200°C Db

- ST Series with sight tubes (VL) and HP Series because of the projected area of non-conductive external components

➢ See “ATEX Details” page in user’s manual for more information
➢ See “Safety Information” page for conditions of safe use

DATE/APPROVAL/TITLE:
17 OCT 2022

Dennis Hall
Engineering Manager