CALL TOLL FREE 877-742-2878 FOR SALES AND SUPPORT

Return to Burtprocess.com

WR10 3/8"

Bolted Plastic Pumps
Operating Instructions

WARREN RUPP, INC.

- **Polypropylene**
- **Kynar**

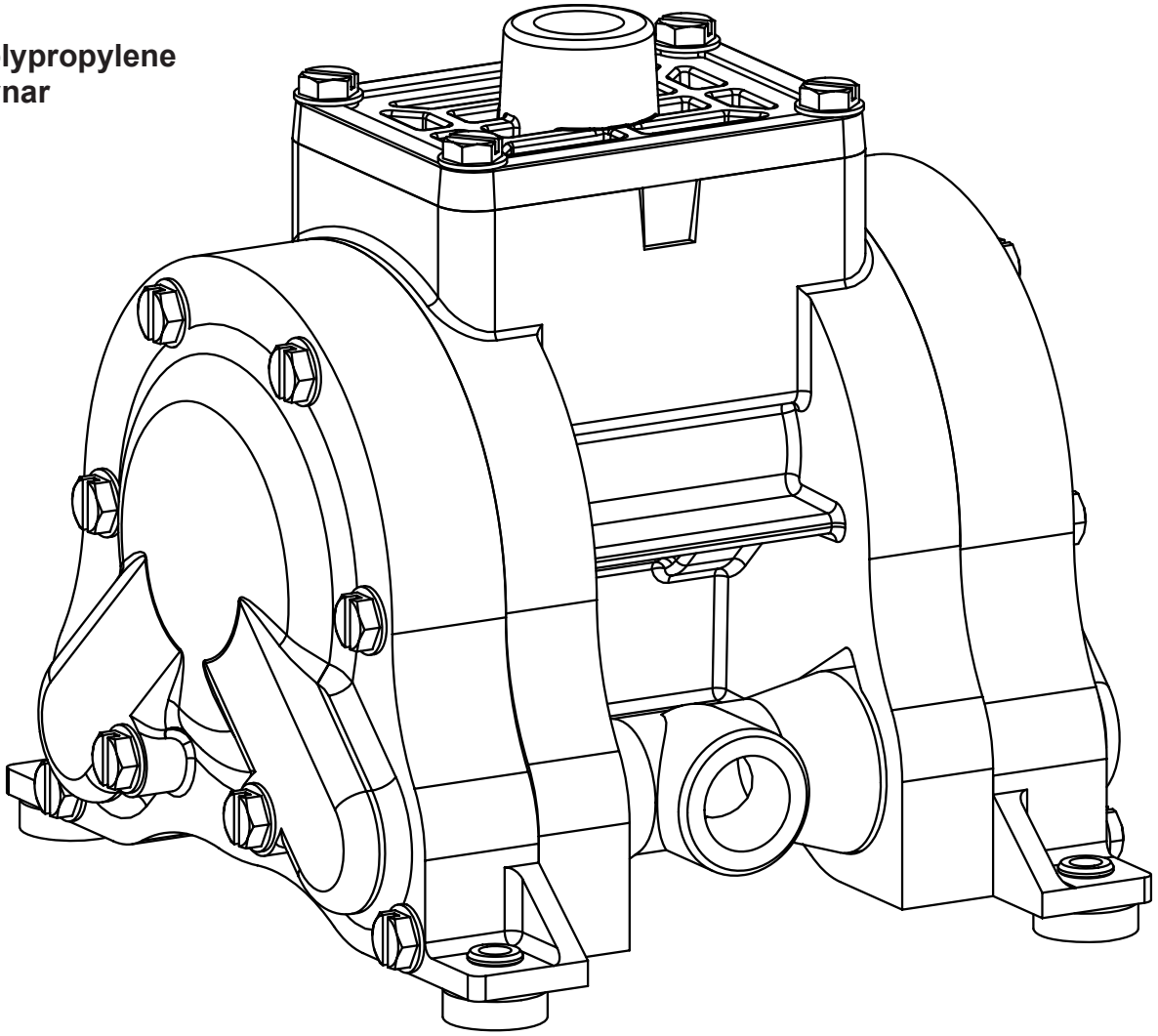

Warren Rupp, Inc. • A Unit of IDEX Corporation • 800 N. Main St., Mansfield, Ohio 44902 USA
Telephone (419) 524-8388 • Fax (419) 522-7867 • warrenrupp.com

IDEX FLUID & METERING

Operating and Service Manual
Model WR10 3/8" Bolted Plastic Pumps

Table of Contents

Warnings, Cautions & Notices 1
Specifications & Performance 2
Installation, Operation & Maintenance 3
Troubleshooting 4
Parts List 5
Pump Drawing, Exploded View 6
Materials, Temperature Limits & Compatibility 7
Declaration of Conformity 8
Notes 9

WARNINGS, CAUTIONS & NOTICES

Please read all cautions, warnings and notes completely before installation and start-up.
It is the responsibility of the purchaser to retain this manual for reference. Failure to comply with the recommendations stated in this manual may damage the pump and void the factory warranty.

WARNINGS

To prevent static sparking the pump, piping, valves, and containers must be grounded.	**Pump exhaust may contain contaminants that can cause serious injury. Take precautions to pipe exhaust away from work area if pumping chemicals, hazardous or flammable materials.**

CAUTIONS

You must check the tightness of all hardware prior to installation.	**Do not exceed the maximum inlet air pressure as stated on the pump model tag.**
Maximum temperature limits are based on mechanical stress only. Certain chemicals will significantly reduce maximum safe operating temperatures. For chemical compatibility and temperature limits please refer to the Chemical Resistance Guide.	**Disconnect the compressed air line to the pump and allow all air pressure to bleed from pump prior to performing any maintenance on the pump. Disconnect all intake, discharge and air lines. Drain the pump and dispose of fluid into a suitable container.**
Check temperature limits for all wetted components when choosing pump materials. Temperature limits may vary depending on the material.	**All operators of the equipment should be properly trained to ensure safe working practices.**
The process fluid and cleaning fluids must be chemically compatible with all wetted pump components. Please refer to the Chemical Resistance Guide for additional information.	**Never allow the piping system to be supported by the pump manifolds or valve housing.** These components are not designed to support structural weight and pump failure may result..
Thoroughly flush pump before installing into process lines. FDA and sanitary approved pumps should be cleaned or sanitized before use.	Noise levels can exceed 85 dBA. **Always wear ear and eye protection when operating or repairing pumps.**

NOTICES

Blow out air line for at least 15 seconds before attaching to pump to make sure that all debris is removed. Use an in-line air filter.	**Compressed air should not be applied to the exhaust port.** If this happens the pump will not function.
Clamp style pumps fitted with PTFE or XLTPE come standard from the factory with expanded PTFE liquid chamber gaskets. **PTFE gaskets cannot be reused.**	**Before disassembly of clamp band pumps, mark a line from each liquid chamber to its corresponding air chamber.** This will ensure proper alignment when reassembling.
Tighten both outer pistons at the same time to ensure a tight fit when installing PTFE diaphragms. See torque settings for additional details.	**The pump does not require continuous lubrication**.

WR10 SPECIFICATIONS & PERFORMANCE

Specifications

Flow Rate adjustable to 0-6.8 gpm (25.7 lpm)
Port Size
Inlet and Discharge . . . . 3/8" Female NPT (BSP)
Air Inlet . . . . . 0.25" Female NPT
Air Exhaust . . . . . 0.25" Female NPT
Suction Lift . . . . . .8' (2.44 m) Dry
Max. Particle Size (Diameter) 0.10"(2.54 mm)
dB(A) Reading. . . . . 78 dB(A)
Shipping Weights
Polypropylene . . . . . 3 lbs (1.40 kg)
Kynar . . . . . 4.5 lbs. (2.04 kg)



Performance

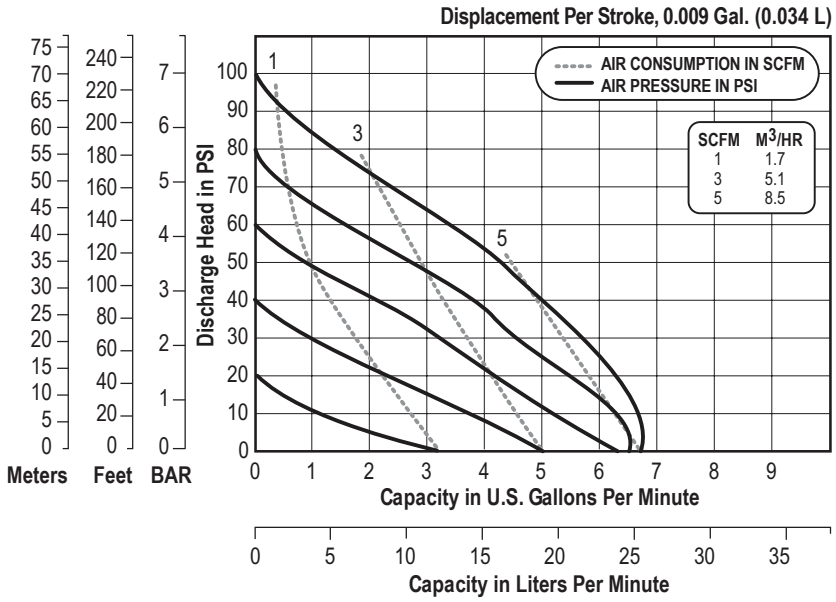

CAUTION: Do not exceed 100 psig (6.8 bars) air supply or liquid pressure.

CAUTION: Nonmetallic pumps and plastic components are not UV stabilized. Ultraviolet radiation can damage these parts and negatively affect material properties. Do not expose to UV light for extended periods of time.

Dimensions

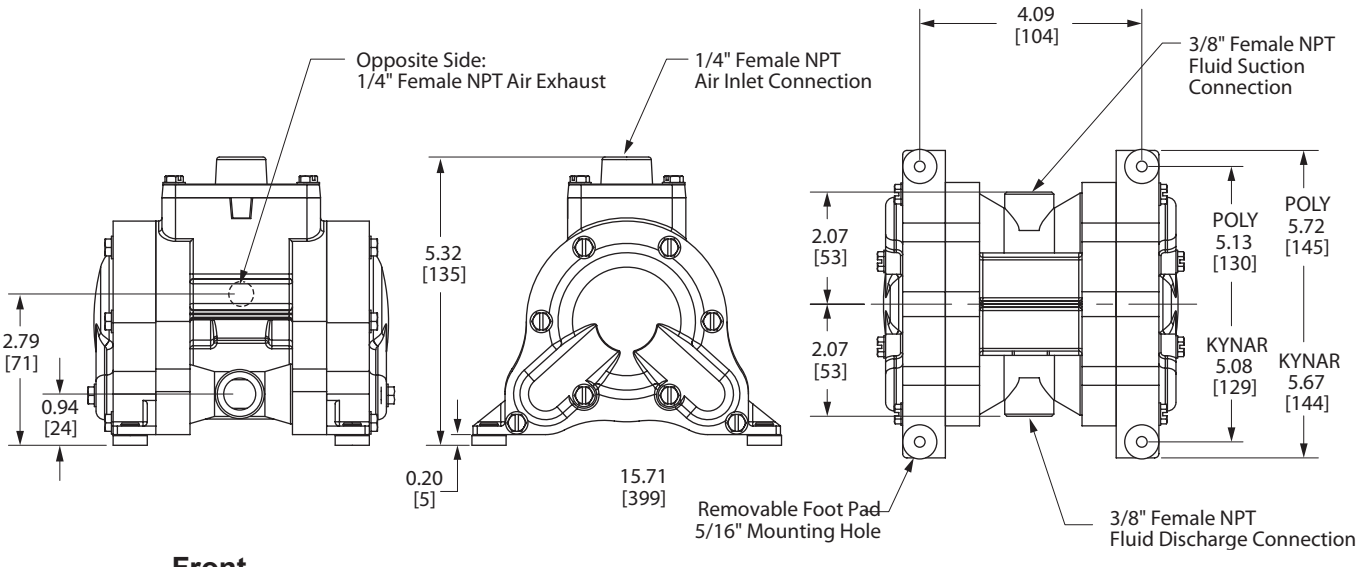

Inches
[mm]

Consult factory for certified drawings.

INSTALLATION, OPERATION & MAINTENANCE

Installation

The pump should be mounted in a vertical position. In permanent installations, the pump should be attached to plant piping using a flexible coupling on both the intake and discharge connections to reduce vibration to the pump and piping. To further reduce vibration, a surge suppressor next to the pump may be used.

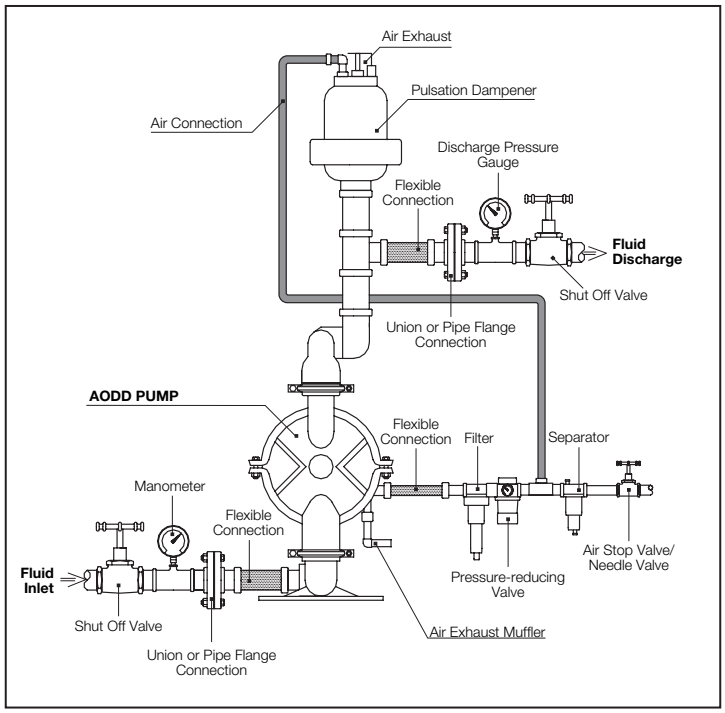

Suction pipe size should be at least the same diameter as the inlet connection size, even larger if highly viscous fluid is to be pumped. If suction hose is used, it must be of a non-collapsible reinforced type.
Discharge piping should be of at least the same diameter as the discharge connection. It is critical, especially on the suction side of the pump, that all fittings and connections are air tight or pumping efficiency will be reduced and priming will be difficult.

Make certain the air supply line and connections and compressor are capable of supplying the required pressure and volume of air to operate the pump at the desired flow rate. The quality of the compressed air source should be considered. Air that is contaminated with moisture and dirt may result in erratic pump performance and increased maintenance cost as well as frequent process “down time” when the pump fails to operate properly.
The pump is powered by compressed air. Compressed air is directed to the pump air chamber by the main air valve. The compressed air is separated from the fluid by a membrane called a diaphragm. The diaphragm in turn applies pressure on the fluid and forces it out of the pump discharge. While this is occurring, the opposite air chamber is depressurized and exhausted to atmosphere and fluid is drawn into the pump suction. The cycle again repeats, thus creating a constant reciprocating action which maintains flow through the pump. The flow is always in through the bottom suction connection and out through the top discharge connection. Since the air pressure acts directly on the diaphragms, the pressure applied to the fluid roughly approximates the air supply pressure supplied to the main air valve.

Pump Operation

Recommended Piping Connections

Pump Size	*Minimum Air Line Size*	*Minimum Suction Line Size*
1/4"	1/4"	1/4"
3/8"	1/4"	3/8"
1/2"	1/2"	1/2"
1"	1/2"	1"
1-1/2"	1/2"	1-1/2"
2"	1/2"	2"
3"	3/4"	3"

TROUBLESHOOTING

Symptom	*Potential Cause(s)*	*Recommendation(s)*
Pump cycles once	***1*** Incorrect pilot o-ring placement ***2*** Inner diaphragm plate installed backwards ***3*** Deadhead (system pressure meets or exceeds air supply pressure) ***4*** Air valve or center block gaskets installed incorrectly	***1*** Reinstall pilot o-rings in correct positions ***2*** Reinstall inner diaphragm plate correctly ***3*** Check system for pressure ratio to pump ***4*** Install gaskets with holes properly aligned
Pump will not operate	***1*** Pump is over lubricated ***2*** Lack of air (line size, PSI, CFM) ***3*** Worn o-rings ***4*** Wrong type of lubrication (attack on o-rings) ***5*** Debris in air valve ***6*** Clogged manifolds ***7*** Incorrect o-ring placement ***8*** Deadhead (system pressure meets or exceeds air supply pressure)	***1*** Set lubricator on lowest possible setting or remove • Elima-Matic is designed for lube free operation ***2*** Check the air line size and length, compressor capacity (HP vs. cfm required) ***3*** Replace o-rings ***4*** Check compatibility of o-rings with lubrication ***5*** Clean air valve/filter ***6*** Clean suction or discharge manifolds/piping ***7*** Reinstall o-rings in correct position ***8*** Increase air supply pressure
Pump cycles and will not prime or flow	***1*** Cavitation on suction side ***2*** Valve ball(s) not seating properly or sticking ***3*** Valve ball(s) missing (pushed into chamber) ***4*** Valve ball(s)/seat(s) damaged or attacked by product ***5*** Clogged suction line	***1*** Check suction condition (move pump closer to product) ***2*** Clean out around valve ball cage and valve seat area • Replace valve ball or valve seat if damaged • Use heavier valve ball material ***3*** Worn valve ball or valve seat • Worn fingers in valve ball cage (replace part) ***4*** Check Chemical Resistance Guide for compatibility ***5*** Clean suction manifold and/or piping
Pump running sluggish/stalling	***1*** Over lubrication ***2*** Icing ***3*** Clogged manifolds ***4*** Deadhead (system pressure meets or exceeds air supply pressure) ***5*** Cavitation on suction side ***6*** Lack of air (line size, PSI, CFM)	***1*** Set lubricator on lowest possible setting or remove • Elima-Matic is designed for lube free operation ***2*** Clean or replace exhaust muffler ***3*** Clean manifolds to allow proper air flow ***4*** Check system to locate deadhead (equilibrium) • Increase air supply pressure ***5*** Check suction (move pump closer to product) ***6*** Check the air line size, length, compressor capacity
Product leaking through exhaust	***1*** Diaphragm failure, or diaphragm plates loose ***2*** Diaphragm stretched around center hole or bolt holes ***3*** Excessive air supply pressure	***1*** Replace diaphragms, check for damage and ensure diaphragm plates are tight ***2*** Check for excessive inlet pressure or air pressure • Tighten bolts to recommended torque ***3*** Check Operating Manual for recommendations
Premature diaphragm failure	***1*** Cavitation ***2*** Excessive flooded suction pressure ***3*** Misapplication (chemical/physical incompatibility) ***4*** Wrong type of lubrication (attack on air side) ***5*** Incorrect diaphragm plates or plates on backwards ***6*** Incorrect shaft with corresponding elastomer ***7*** Start up at full air pressure	***1*** Enlarge pipe diameter on suction side of pump ***1,2*** Move pump closer to product • Raise pump/place pump on top of tank to reduce inlet pressure ***2*** Add accumulation tank or pulsation dampener as close to the pump as possible ***3,4*** Consult Chemical Resistance Chart for compatibility with products, cleaners, temperature limitations and lubrication ***5,6*** Check Operating Manual to check for correct part and installation ***7*** Start up pump slowly (manually or with Smart Start)
Breaking and bending shafts	***1*** Build up of solids in water chamber ***2*** Loose diaphragm plates	***1*** Flush pump, start pump slow ***2*** Tighten diaphragm plates when replacing diaphragms

WR10 PARTS LIST

AIR VALVE ASSEMBLY			
Item	***Description***	***Qty.***	***Standard: Polypropylene***
	Air Valve Assembly (Includes items 1-10)	1	E800
1	Valve Body	1	10-048
2	Valve Spool	1	E500B ASY (Includes (2) P98-104A)
3	Valve Spool U-Cup	2	P98-104A
4	End Cap	2	E800D (Includes (1) E800D ASY)
5	End Cap O-Ring	2	E500E
8	Air Diverter	1	10-075
9	Valve Insert	1	E500H
10	Valve Gasket	1	E800J
11	Valve Screw	4	10-050
AIR END ASSEMBLY			
Item	***Description***	***Qty.***	***Standard: Polypropylene***
12	Center Section	1	E801A
18	Pilot Shaft	1	E803A
19	Pilot Shaft Spacer	5	E503C
20	Pilot Shaft O-Ring	6	E503B
21	Pilot Shaft Snap Ring	2	E503D
22	Shaft Retainer	2	E801B
25	Shaft Retainer Screw	4	E501C
33	Muffler	1	06-034

DIAPHRAGM ASSEMBLY				
Item	***Description***	***Qty.***	***TPE***	***PTFE***
34	Main Shaft O-Ring	2	E503B	E503B
35	Main Shaft	1	10-028	10-028
37	Inner Diaphragm Plate	2	C126	C126
38	Outer Diaphragm Plate	2	10-023 (Poly), 10-040 (Kynar)	10-023 (Poly), 10-040 (Kynar)
40	Diaphragm	2	10-032 (XL), 10-033 (Geolast)	10-044 (PTFE)

WET END ASSEMBLY				
Item	***Description***	***Qty.***	***Standard: Polypropylene***	***Option 1: Kynar***
44	Water Chamber	2	10-002	10-036
45	Water Chamber Bolt (Long)	4	10-052	10-052
46	Water Chamber Bolt (Short)	12	10-051	10-051
50	Valve Seat	4	10-022 (Poly)	10-039 (Kynar)
51	Valve Seat Seal	8	10-073 (XL), 10-045 (PTFE)	10-073 (XL), 10-045 (PTFE)
52	Valve Stem	4	10-005	10-038
53	Spring	4	10-030	10-030
60	Manifold	2	10-003	10-037
62	Foot Pad	4	10-035	10-035

WR10 EXPLODED VIEW

Torque Settings	
Water Chamber Bolts	40 in-lbs (4.5 N-m)
Diaphragm Plates — Rubber	60 in-lbs (6.8 N-m)
Diaphragm Plates — PTFE	60 in-lbs (6.8 N-m)
Air Valve Cap Screws	25 in-lbs (2.8 N-m)

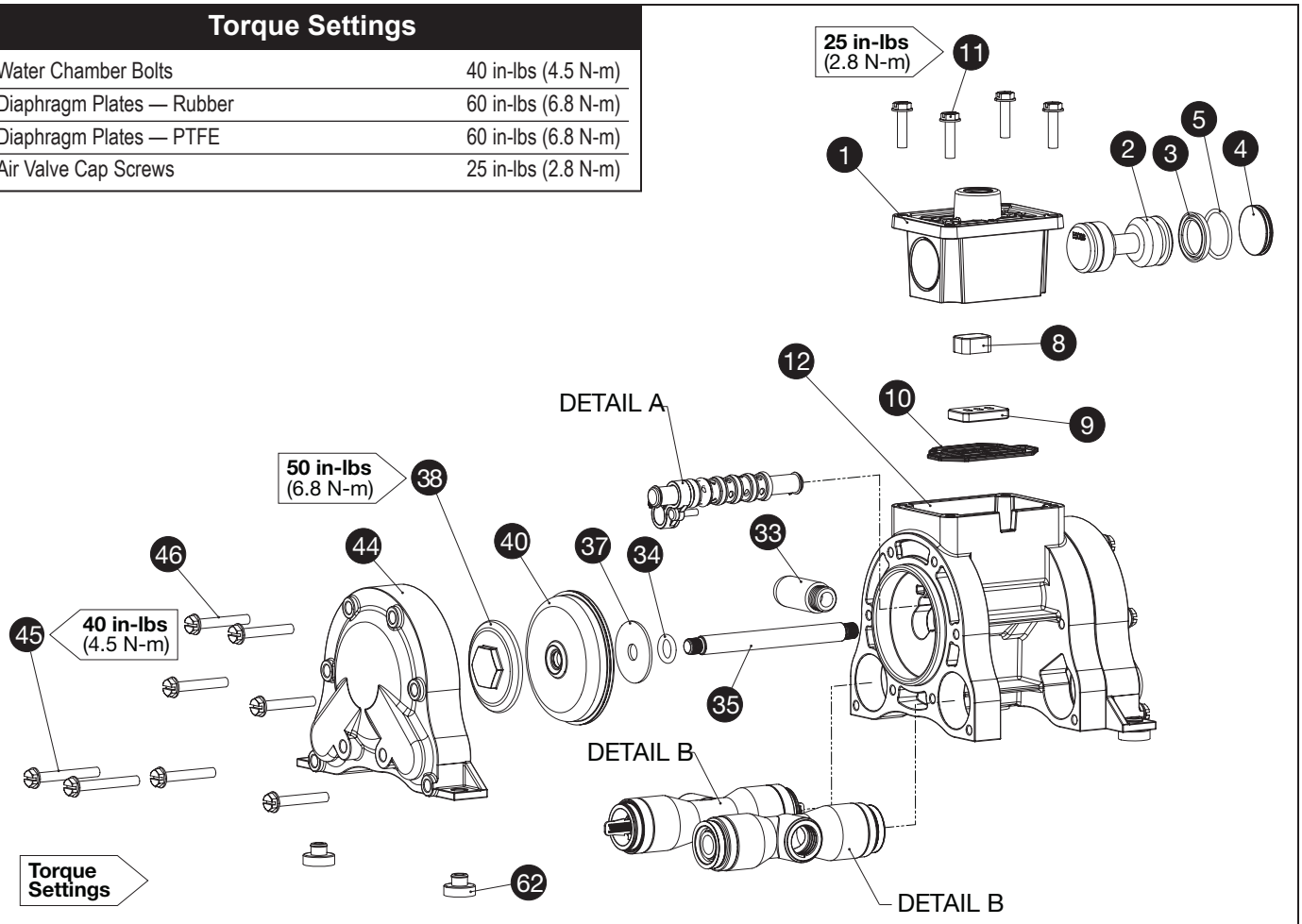

Detail A

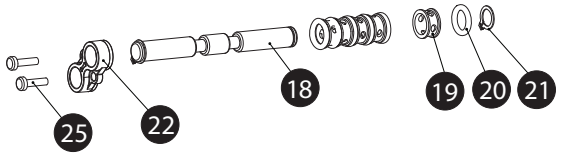

Detail B

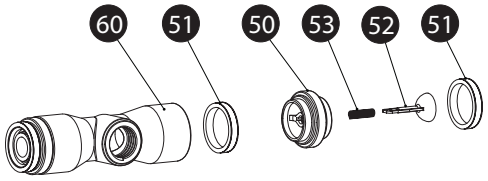

WR10 Repair and Maintenance Kits

Air End Kit- Part #: WR10 AIR KIT

Description	Qty	Part Number
Valve Spool U-Cup	2	P98-104A
End Cap O-Ring	2	E500E
Air Diverter	1	10-075
Valve Insert	1	E500H
Valve Gasket	1	E800J
Pilot Shaft O-Ring	6	E503B
Main Shaft O-Ring	2	E503B

Wetted End Kits (Polypropylene)

Part Number	Description
WR10P XL KIT	XL Elastomer Kit
WR10P TX KIT	PTFE Elastomer Kit

Wetted End Kits (PVDF)

Part Number	Description
WR10K XL KIT	XL Elastomer Kit
WR10K TX KIT	PTFE Elastomer Kit

MATERIALS, TEMPERATURE LIMITS & COMPATIBILITY

Materials of Construction — Pumps

MODEL	Acetal®	Aluminum	Cast Iron	Hastelloy C	Polypropylene	PVDF	Stainless Steel
WR10 (3/8")					●	●	

Diaphragms, Valve Seats & Valve Seals

ELASTOMERS	Aluminum	Buna-N	PVDF	Neoprene	EPDM	Polypropylene	Polyurethane	316 Stainless Steel	PTFE			Encapsulated Silicone	Thermoplastics		(FKM) Fluorocarbon
									Tef-Matic™	Versa-Tuff™	FUSION™		Santoprene (TPE XL)	FDA Hytrel®	
DIAPHRAGMS										●			●		
VALVE SEATS			●			●									
VALVE SEALS										●			●		

Temperature Limits

BUNA-N	+10°F (-12°C) to +180°F (82°C)
PTFE	+40°F (+4°C) to +220°F (105°C)
SANTOPRENE (TPE XL)	-20°F (-29°C) to +300°F (149°C)

PLASTIC PUMPS can operate to the following temperature limits:

• POLYPROPYLENE	32°F (0°C) to 175°F (79°C)
• PVDF	10°F (-12°C) to 225°F (107°C)

NOTE: These are average temperatures. Chemicals and solvents can have an effect on temperature limit

5 - YEAR Limited Product Warranty

Warren Rupp, Inc. ("Warren Rupp") warrants to the original end-use purchaser that no product sold by Warren Rupp that bears a Warren Rupp brand shall fail under normal use and service due to a defect in material or workmanship within five years from the date of shipment from Warren Rupp's factory. Warren Rupp brands include Warren Rupp®,SANDPIPER®, SANDPIPER Signature Series™, MARATHON®, Porta-Pump®, SludgeMaster™ and Tranquilizer®.

The use of non-OEM replacement parts will void (or negate) agency certifications, including CE, ATEX, CSA, 3A and EC1935 compliance (Food Contact Materials). Warren Rupp, Inc. cannot ensure nor warrant non-OEM parts to meet the stringent requirements of the certifying agencies.

~ See complete warranty at https://www.sandpiperpump.com/

SANDPIPER®

EC Declaration of Conformity

Manufacturer:
Warren Rupp, Inc.
800 N. Main Street
Mansfield, Ohio, 44902 USA

Certifies that Air-Operated Double Diaphragm Pump Models: DSB Series, DMF Series, G Series, HDB Series, HDF Series, HP Series, F Series, MS Series, S Series, SL Series, SP Series, SSB Series, T Series, U1F Series, WR Series; High Pressure Pump Models: EH Series, GH Series, SH Series; Submersible Pump Models: SMA3 Series, SPA Series; and Surge Dampener/ Suppressor Models: DA Series, TA Series comply with the European Community Directive 2006/42/EC on Machinery, according to Annex VIII. This product has used Harmonized Standard EN809:2012, Pumps and Pump Units for Liquids - Common Safety Requirements, to verify conformance.

October 3, 2022
DATE/APPROVAL/TITLE:

Technical File on record with:
DEKRA Certification B.V.
Meander 1051
6825 MJ Arnhem
The Netherlands


Signature of authorized person

Dennis Hall
Printed name of authorized person

Engineering Manager
Title

IDEX

CE

SANDPIPER®

EC Declaration of Conformity

Manufacturer:
Warren Rupp, Inc.
800 N. Main Street
Mansfield, Ohio, 44902 USA

Certifies that Air-Operated Double Diaphragm Pump Models: DSB Series, DMF Series, G Series, HDB Series, HDF Series, HP Series, F Series, MS Series, S Series, SL Series, SP Series, SSB Series, T Series, U1F Series, WR Series; High Pressure Pump Models: EH Series, GH Series, SH Series; Submersible Pump Models: SMA3 Series, SPA Series; and Surge Dampener/ Suppressor Models: DA Series, TA Series comply with the United Kingdom Statutory Instruments 2008 No. 1597, The Supply of Machinery (Safety) Regulations 2008, according to Annex VIII. This product has used Designated Standard EN809:2012, Pumps and Pump Units for Liquids - Common Safety Requirements, to verify conformance.

October 17, 2022
DATE/APPROVAL/TITLE:

Technical File on record with:
DEKRA Certification UK Limited
Stokenchurch House
Oxford Road
Stokenchurch
HP14 3SX


Signature of authorized person

Dennis Hall
Printed name of authorized person

Engineering Manager
Title

IDEX

UK CA

Kynar is a registered tradename of Penwalt Corp. Warren Rupp is a registered tradename of Warren Rupp, Inc.

WARREN RUPP, INC.
A Unit of IDEX Corporation
800 North Main Street
Mansfield, OH 44902 USA
(419) 524-8388
Fax: (419) 522-7867
www.warrenrupp.com