CALL TOLL FREE 877-742-2878 FOR SALES AND SUPPORT
Return to BurtProcess.com

NETZSCH

Proven Excellence.

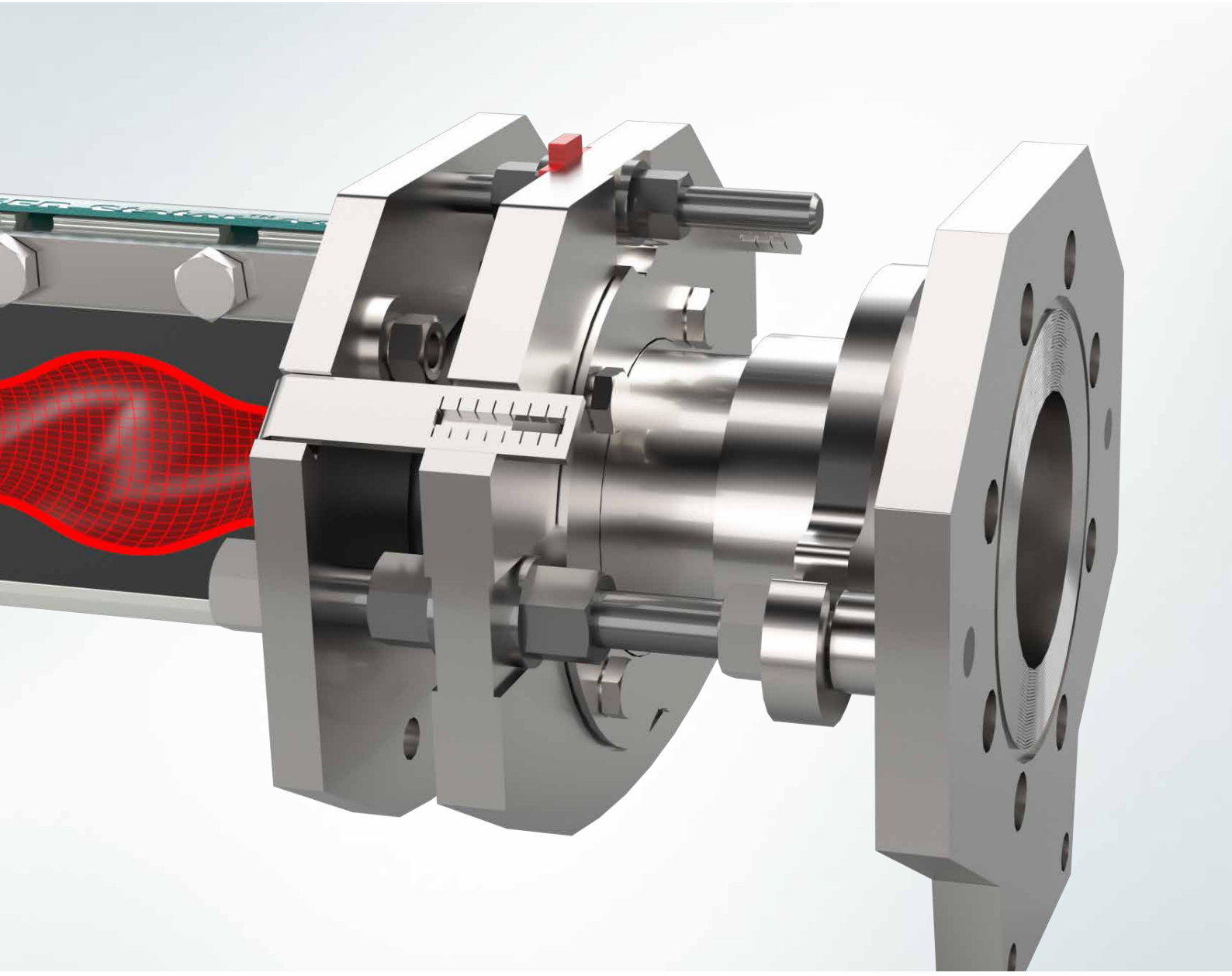

The xLC® Stator Adjustment System

More than Triples the Service Life of the NEMO® Progressing Cavity Pump

Pumps & Systems

xLC® Stator Adjustment System

for optimal performance of your pump with a significantly longer service life

How does it work?

The iFD-Stator® can be adjusted gradually in next to no time. By axially compressing the elastomer, the pre-tension is increased, readjusting the sealing line between stator and rotor. Pump performance is restored. This reduces the need for spare parts and maintenance – saving costs!

What are the advantages?

- More than triple the service life, depending on the application
- Upgrade of the pump without additional space required
- No adjustment of piping and pump base plate required for retrofitting
- Controlled, defined adjustment of the xLC® adjustment system
- High reliability due to robust construction and simple operation
- Constantly high efficiency of the NEMO® pump maintained by adjusting the stator
- Better maintenance scheduling through the display of remaining capacity
- Rapid amortisation of the purchase due to fewer spare parts required and longer maintenance intervals

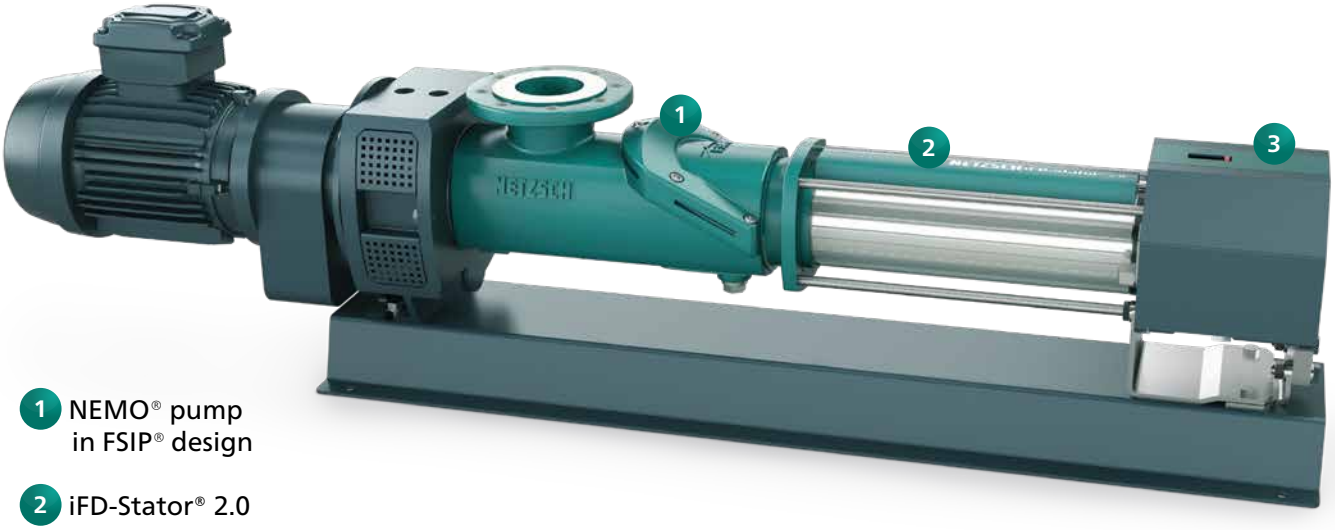

1 NEMO® pump in FSIP® design

2 iFD-Stator® 2.0

3 xLC® stator adjustment system

For all high-wear applications, we recommend the use of the xLC® unit, as the purchase is quickly amortised and the significantly longer maintenance intervals are a great relief for the service personnel. Since the xLC® unit does not change the pump dimensions, even pumps that have already been installed can easily be retrofitted.

What steps are necessary?

If a drop in pump performance is detected, the system is readjusted using adjustment nuts 3 and the elastomer part of the stator is pressed into its casing again. A scale with seven increments (from 0 to max) facilitates step-by-step adjustment and indicates the capacity remaining until a stator needs changing.

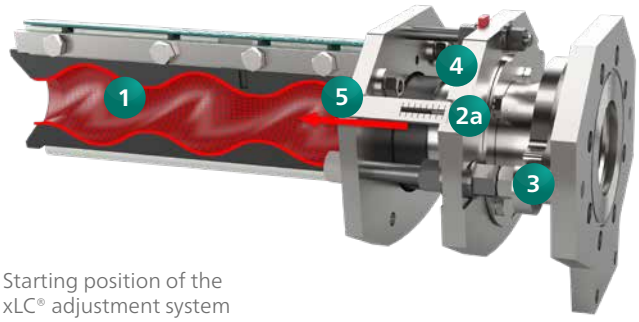

Starting position of the xLC® adjustment system

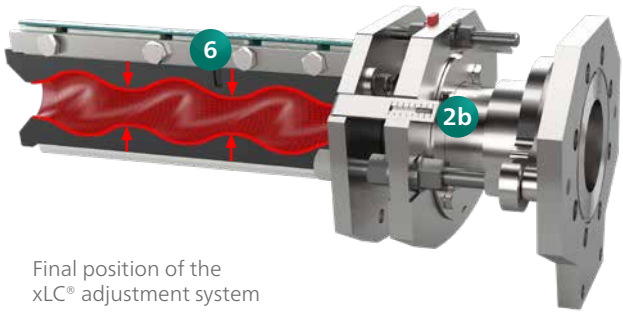

Final position of the xLC® adjustment system

1 iFD-Stator®

2a Adjustment scale in start position

2b Adjustment scale in end position

3 Adjustment nuts

4 Adjustment flange

5 Adjustment direction

6 Wear compensation

What goes on inside?

The adjustment flange movement triggered by the adjustment nuts compresses the elastomer part in the iFD-Stator® housing. Since it can only give way inwards, wear is compensated. The separation of elastomer and casing ensures that this compensation is distributed over the entire length of the stator, creating an even new sealing line that ensures optimum pump performance.

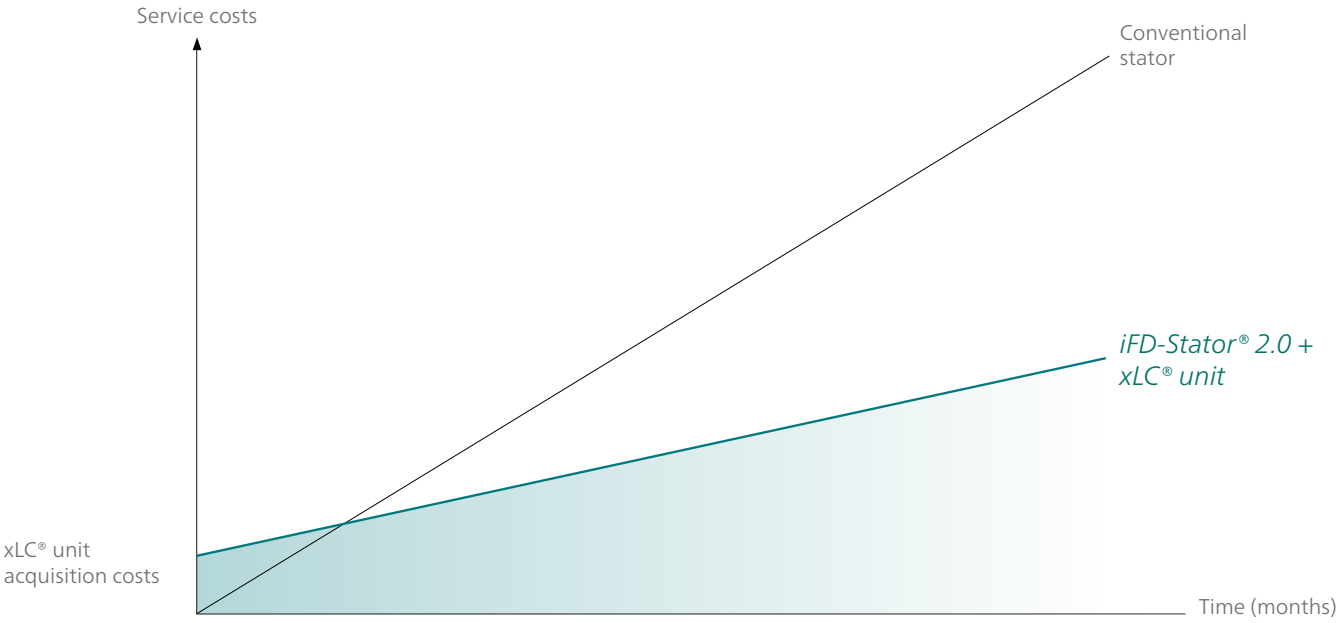

Reducing service costs (spare part and labour costs): A comparison of a NEMO® pump with conventional stator and a NEMO® BY045 with iFD-Stator® 2.0 + xLC® unit clearly shows the enormous savings and rapid amortisation of the xLC® unit's acquisition costs.

The NETZSCH Group is an owner-managed, international technology company with headquarters in Germany. The Business Units Analyzing & Testing, Grinding & Dispersing and Pumps & Systems represent customized solutions at the highest level. More than 3,700 employees in 36 countries and a worldwide sales and service network ensure customer proximity and competent service.

Our performance standards are high. We promise our customers Proven Excellence – exceptional performance in everything we do, proven time and again since 1873.

The NETZSCH Business Unit Pumps & Systems offers with NEMO® progressing cavity pumps, TORNADO® rotary lobe pumps, NOTOS® multi screw pumps, macerators/grinders, dosing technology and equipment custom built and challenging solutions for different applications on a global basis.

Proven Excellence.

NETZSCH Pumpen & Systeme GmbH
Geretsrieder Straße 1
84478 Waldkraiburg
Germany
Tel.: +49 8638 63-0
info.nps@netzsch.com

NETZSCH®

www.netzsch.com

NPS · 345 · 02 · 02/20 · 03 · Technical specifications are subject to change.