www.weightechusa.com

weightechUSA



WT2090
Weighing Bars
Operation/Use Manual and Installation

Livestock Weight Indicator
www.weightechusa.com
All rights reserved.

Thank you for choosing WEIGHTECHUSA!

Now, in addition to acquiring excellent quality equipment, you can count on an agile, dynamic and differentiated support team.

Before using the WT2090 weighing bars and indicator for the first time, please read this manual carefully.

You can also find additional information about this and all the other products in the WEIGHTECHUSA catalog on the website www.weightecusa.com

SELECTING A LOCATION

Careful site preparation is essential for accurate weighing. You need to decide where the scale and load bars will be installed. The maximum distance between the load bars and the scale will be determined by the length of the load bar cables. Choose a route for the cables that ensures they will not be subject to mechanical damage.

Important: This product is not suitable for use in aggressive or corrosive environments (e.g. pigsty installations or similar).

LOCATING THE SCALE

Keep the following points in mind when choosing a place for the Scale.

- Do not mount the Scale on the crate.
- Ensure the Scale and it's operator do not interfere with the flow of animals.
- Ensure that there is adequate light to read the Scale's screen.
- If you expect to weigh manually, keep the Scale close enough to the crate so that the crate's barrier controls can be easily reached.

LOCATING THE LOAD BARS

Keep the following points in mind when choosing a place for the load bars.

- Mount the load bars and platform clear of obstructions such as fence posts.
- The site must be level.
- Provide a foundation. A concrete pad is recommended. Load bars can be mounted on a heavy board.

Hint: Construct the foundation so that it extends at least 600 mm (23 inches) before the platform. This will force the animals to step onto the foundation before moving on to the weighing platform and will reduce the amount of dirt, mud, etc, carried onto the platform.

- Don't recess the load bars into troughs in the foundation. The troughs are likely to fill with water and mud.

1 INSTALLING YOUR SCALE

WeightechUSA scales are easy to install and have no parts that require special assembly. For this reason, they can be installed by the user or by the suppliers of the cage or trunk/scales.

Before starting the installation, read this manual carefully, visit friends who already have an electronic scale, and talk to your scale supplier to determine the most suitable type of installation.

1.1 UNPACKING THE PRODUCT

When unpacking the product, check that you have received the following components:

- 1 case containing WT2090 Electronic Weighing Indicator or WT2090 Printer, bi-volt power supply for charging the indicator, fixing bracket, user manual.
- 2 weighing bars with fixed cables;
- 2 wooden slats for transportation (discard when installing)

If any of these components are missing, immediately notify WEIGHTECHUSA, which will take the applicable measures.

1.2 BAR ASSEMBLY AND CONNECTION DIAGRAM

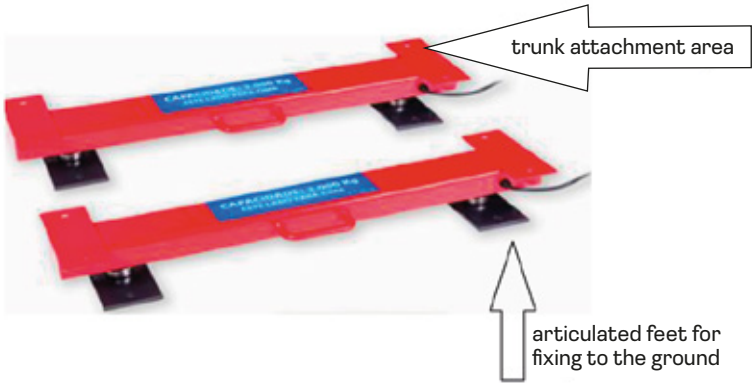

The Weigh Bars must be installed on a level and firm floor, fixing the feet with screws or parabolts. After placing the bars on the installation site, use a level to confirm that the equipment is level. If there is a slight unevenness in the ground, the articulated feet will correct the fixing.

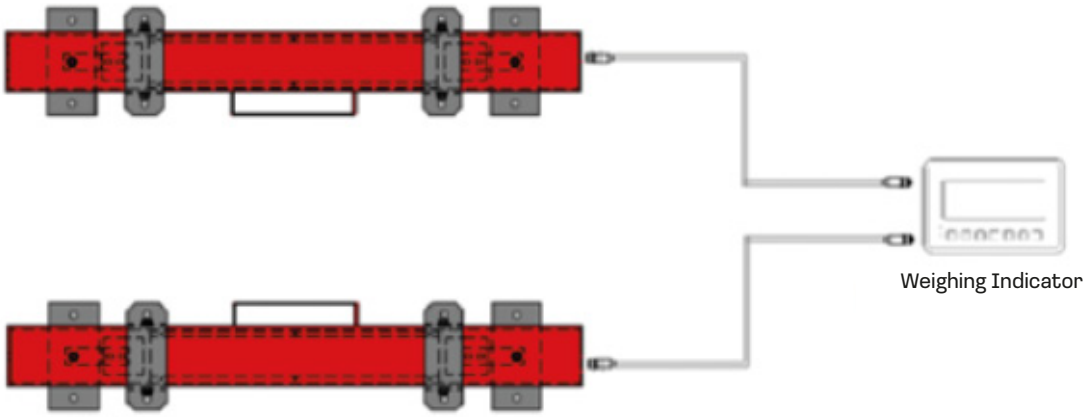

1.3 TYPES OF INSTALLATIONS

The gross weighing capacity of your scale is 3,000kg. Gross capacity means the maximum weight it can indicate (weight of the weighing frame plus the weight of the animal).

The net weighing capacity of your scale is 3,000kg minus the weight of the frame on it. There are weighbridges weighing from 100 to 200kg, cages weighing from 500 to 900 kg, and trunks/balances weighing from 1,300 to 1,700kg. The weighing bars have a gross weighing capacity of 3,000 kg and a length of 0.90m (or 1.20m depending on the model chosen), supporting a variety of trunks/balances on the market. They offer the highest net weighing capacities and stability available on the market for weighing animals.

TIPS

Ø If it's a new brete, mount it perpendicular to the sun.
Ø Install the scales before the egg (gate).
Ø Don't smooth the concrete.
Ø When concreting the cattle path or platform, leave stripes across it.
Ø Section the concrete, leaving grooves.
Ø Always apply the weight on the edges of the bars, never in the middle.
Ø In installations with bars underneath, always make a 10 cm column of concrete where the bars will rest.
Ø Install the bars easily.
Ø Do not leave the weighing platform completely loose.
Ø Install movement limiters.

Ø Make sure there is no snagging.

Ø Don't leave gaps where animals could get hurt.

Ø Think about how to remove an animal that might fall out.

Ø Place the case where the operator can have a full view of the weighing.

Ø Wrap up excess cable or hide it out of reach of an animal.

1.4 PLATFORM IN THE EXISTING BREECH WITH BARS UNDERNEATH

In this type of installation, the weighing bars are installed under a wooden platform on the floor of the aisle/pen/trunk. This is the quickest way to install the scales. However, it is not the best way, because if the animal touches the sides or gates there will be a difference in weight.

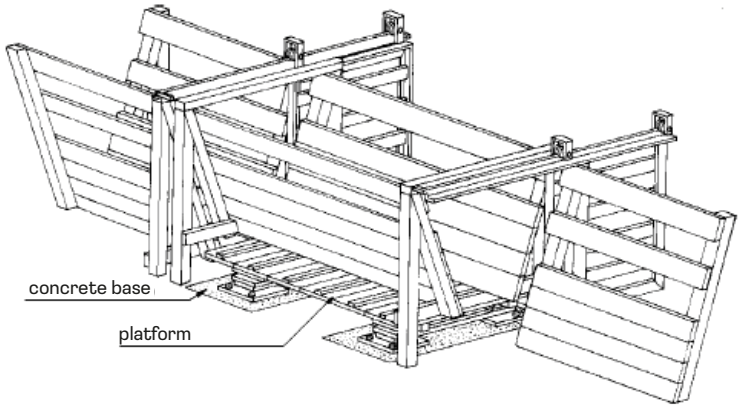

Ø It's easy and quick to build.

Ø The cost is low.

1.5 BOARD CONSTRUCTION DETAILS

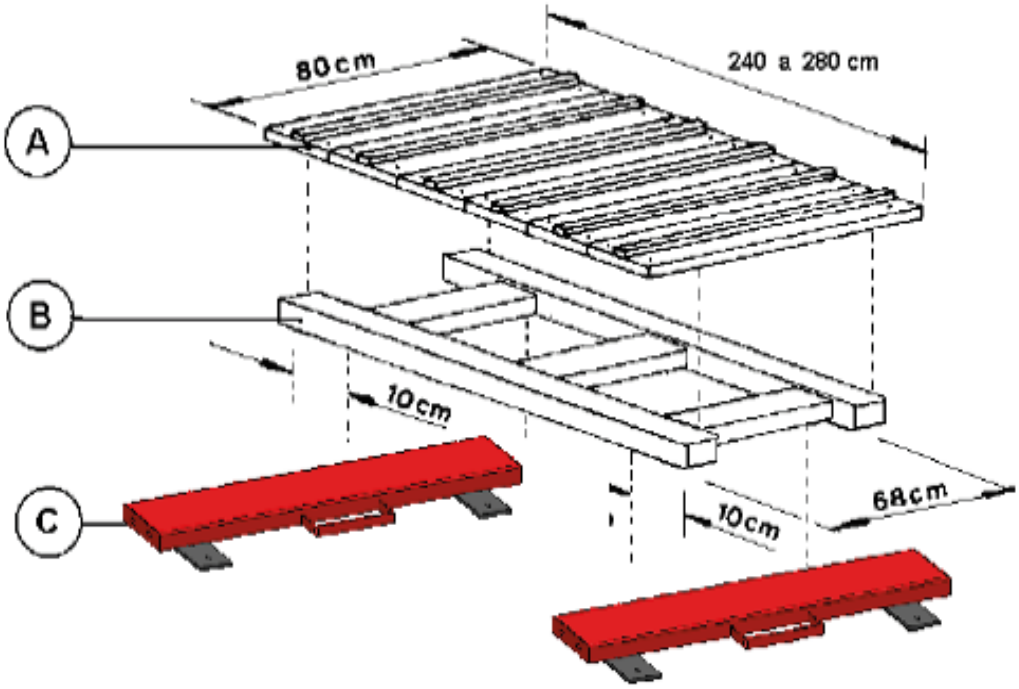

1- Prepare the platform on which the weighing bars will be fixed.

A - Platform: Use 2.5 cm thick boards.
B - Platform: Use 6 x 12 cm beams.
C - Weigh bar.

2 - Attach the weighing bars to the platform, using ø 3/8"-16 UNC threaded bolts, at a distance of 10cm from the edge of the platform and with an approximate distance of up to 2.6 meters between the bars for larger pens.

3 - Choose a point in the pen that allows a distance of 2.4 to 2.8 meters between two gates.

4 - Level the floor, preferably with concrete, especially where the weighing bars will be installed. Where possible, we suggest building a ±10 cm concrete platform on which the bars will rest.

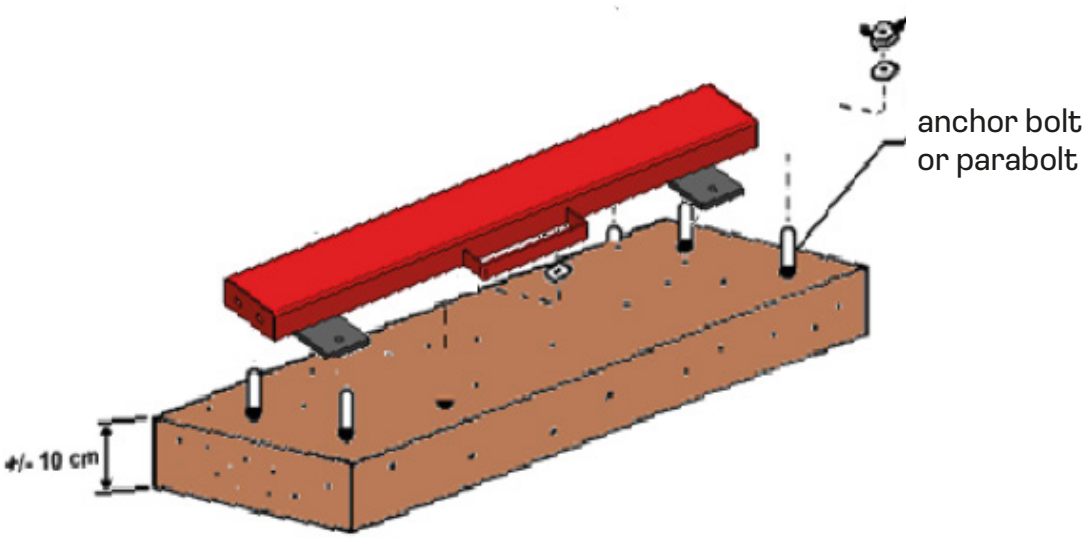

CAUTION

Never use the center of the weighing bars to support any load.

Always use the two support points at their ends.

Place 8 bolts embedded in the concrete so that they allow the bars to fit (4 per bar). Use butterfly nuts and washers to fix the bars to the bolts and to fix the top of the bars to the platform.

5 - If you wish, make a wooden or concrete ramp for the animals to enter and exit the platform.

6 - Install the platform over the weighing bars inside the truncheon.

7 - Connect the weighing bars to the case. Tighten the connectors well to prevent moisture from entering, but be careful, over-tightening can damage them. Your scale is ready for use. Follow the operating instructions in the weighing terminal user manual.

1.6 CAGE WITH BARS UNDERNEATH

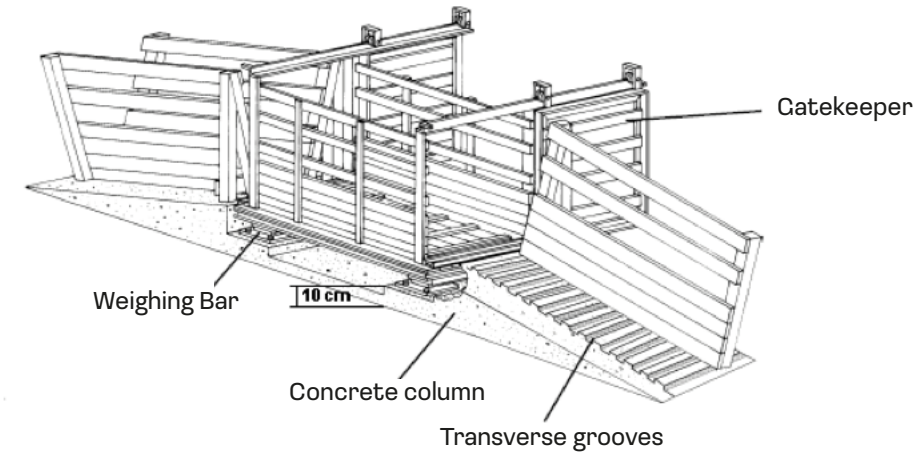

Use the cage of an old mechanical scale if it is in good condition (as shown in the figure above) or a new wooden cage. The new cage can be bought from a third party or made on the farm. In general, the cage is installed in the pen, and the gates are also with the cage on the bars. The cage should measure 1.1m wide and 2.4 to 2.8m long (depending on the space available). It's easier to buy a new cage than to try to use an existing mechanical scale.

Ø The entire cage rests on the bars, so there is no risk of the animal touching the sides and causing weighing errors.

1 - Remove the levers from the existing mechanical scale. The existing frame of beams/profiles must be maintained so that the structure of the cage is not damaged, or purchase/fabricate a cage.

2 - Install the weighing bars under the cage, at a distance of 10cm from the edge of the platform or at a distance of approximately 2.6 meters between the bars in the case of larger cages.
If necessary, make the 10 cm posts on which the weighing bars will rest to level the cage with the existing saddle. See figure above.

The concrete should never be smooth. It should always have transverse grooves to give the animals more support when climbing up and down, and for water, manure and urine to drain off to the sides.

3 - Level the floor where the bars will be installed, preferably by cementing it. The bars should be 10 to 15 cm above ground level to make removal easier (less messy). Fix the bars to their supports using 08 parabolts or screws with butterflies, as in type 1 (4 per bar) and to the cage using screws as well.

4 - Use two beams with the same thickness as the weight bars to help with installation.

5 - To remove the weigh bars, repeat the procedure from steps “d” and “c” above, only in reverse. Place the rafters in place of the weighing bars to make it easier to reinstall the bars when carrying out other weighings.

6 - Connect the weighing bars to the WT2090 indicator. See connection diagram on page 7. Tighten the connectors when connecting the cables, your scale is ready for use.

Follow the operating instructions described in the weighing terminal's user manual. If necessary, make access and exit ramps for the animal.

1.7 DESIGN AND INSTALLATION OF NEW WOODEN CAGE

1 - Build or purchase the cage, based on figures 2 and 3 below, and install the weighing bars as indicated:

Figure 2

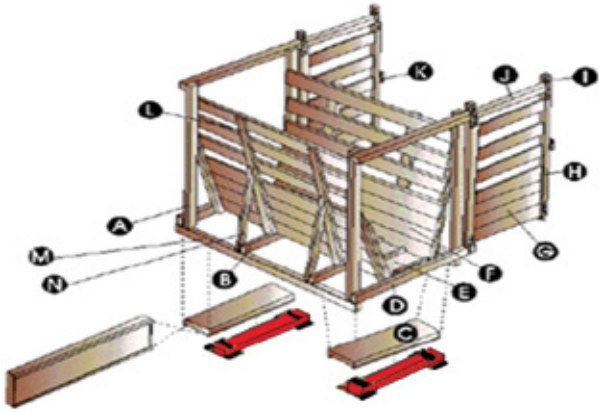

Figure 3

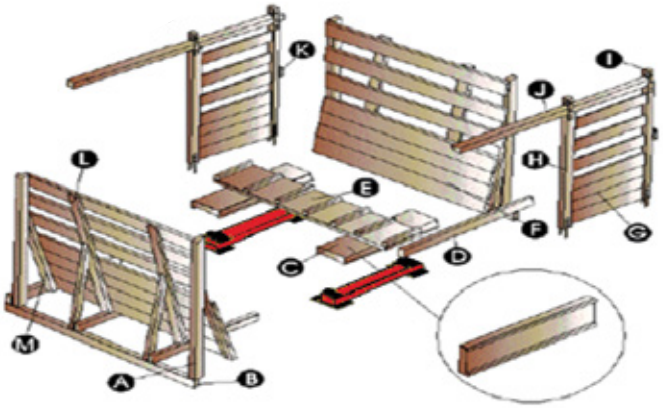

1.8 LIST OF MATERIALS FOR A NEW WOODEN CAGE

Description	Quantity	Measures (Side x Height x Length) in cm
A-Beam	4	9x7x225
B-Beam	2	9x6x137
C-Plank	2	25x6x139
D-Rafter	2	6x6x160
E-Plank	**1**	50x6x279
F-Board	14	16x3x259
G-Board	14	16x2,5x127
H-Beam	4	10x7x171
I-Iron Sheet	4	5x4x41
J-Beam	2	12x6x218
K-Iron Handle	2	-
L-Beam	8	9x7x202
M-Beam	2	10x7x291
N-Rafter	4	6x6x123
Wooden screw	145	7/16'' x 12 cm
Wooden screw	35	7/16'' x 18 cm

Ø Always use the scale following the instructions in the manuals that came with it.

Ø Do not connect the Weighing Terminal if the power cable or plug is damaged.

Ø When connecting or disconnecting the Terminal from the weighing bar cable, make sure that the connectors are properly tightened to prevent moisture from entering.

Ø Never use objects to operate the keys. Always use your fingers to operate the keys.

Ø Periodically clean the case, cables and weighing bars using a soft, dry cloth. More difficult stains can be removed with a cloth slightly dampened in water and neutral soap.

Ø Never use benzine, thinner, alcohol or other chemical solvents for cleaning.

Ø Avoid subjecting the case, weighing bars and their connecting cables to excessively humid or wet environments.

Ø This equipment should only be serviced by qualified personnel authorized by WeightechUSA.

2 TECHNICAL PARAMETER

Accuracy:	Level III
Specification:	(0 - 3000) d
Working voltage:	DC:5V
Division value:	1/2/5/10/20/50
AD output speed:	10 times / sec. Or 40 times/sec.
internal resolution:	≤ 24 bits
Operation temperature:	-10 ~ 40° C
Battery:	6V/4A
AC Power :	110-240v

3 CONNECTION INDICATOR WITH LOAD CELL

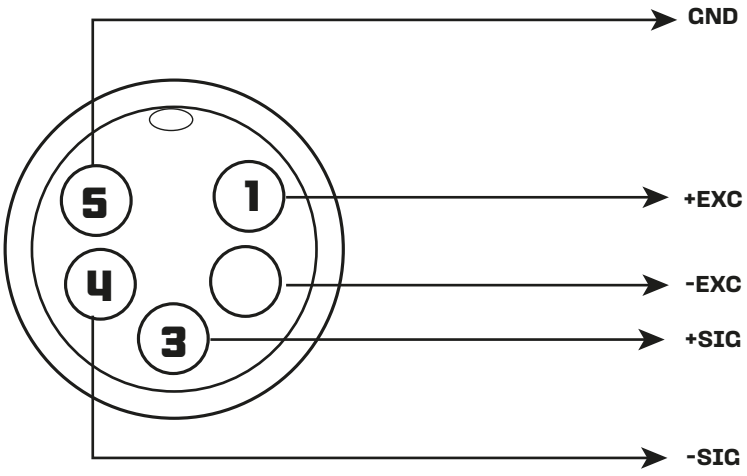

4 COMMUNICATION INTERFACE (RS232)

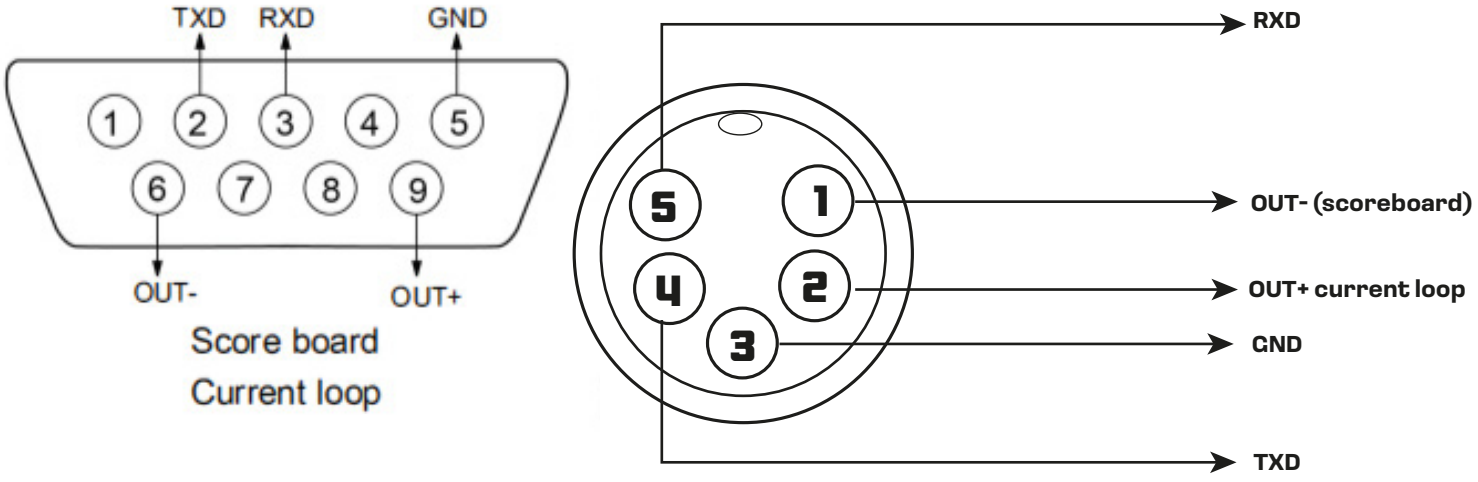

Stainless steel indicator

5 DESCRIPTION OF KEYS FUNCTIONS

The keys of the instrument serve as release, and immediate press and release can be effective.

1. [Fun] key: long press this button to enable the indicator into the setting status of feature and parameters, while short press [Fun] key to hold or off peak hold function.
2. [Print] key: long press this key to enable the up-down alarm setting mode, while short press [Print] key can send the serial data, and moreover, in the parameter setting state, the key plays the role of confirmation.
3. [F] key: short press [F] key to enable weighing unit conversion in the instrument, while in the mode of parameter setting, this key is served as digital switching, and in status of digital input, digit is moved to right
4. [Tare] key: short dick enables peeling of instrumentation, and in status of digital input, digit is increased
5. [zero] key: short press [zero] to enables the instrument returned to zero within zero-setting scope, and in status of digital input, digit is reduced

Indicator functions and operating instructions

1. Long press the [Fun] key to enter the settings in weighing mode, and the first major item "P1 unt" is displayed, and it is the serial port setting. At this time, continuous pressing of the [Fun] key enters the next major item, and the press of [Print] key enters detailed parameter settings and saving and then goes to the next detailed parameter, and [F] key is used to make changes in single bit parameter and setting bit of a number of parameters. [Tare] key is to increase , [zero] is to reduce.
2. The specific adjusted parameters are as follows
3. If just weighing range, division value and weight calibration is modified, please refer to P5 and P7 function options

Items	Parameters	Function	Adjust mode / Standard value
P1 UnNt (set Unit)	U1 Kg	U1 must be “Kg”	Press [Imp] key to go to the next step
	U2*	U2 "g" it can change between kg, g	oFF
	U3*	U3 "lb" it can change between kg, lb	oFF
	U4*	U4 "oz" it can change between kg, oz	oFF
	U5*	U5 "pcs" it can change between kg, pcs	oFF
P2 TRA	tM*	Communication Mode 0 Stable continuous transmission 1 Continuous transmission 2 stable transmission 3 answer mode 4 manual transmission mode 5 Manual print mode 6 Stable print mode	Press [Imp] to confirm and go to the next step

	Adr	Comm. address, useful it multi station communication	Press [F] key to change the value. Press [Imp] key to confirm and go to next step
	b	is communication baud rate (1200,2400,4800,9600,19200)	
	tF	00 - 10	
	dpn	Scoreboard (optional function) 0----close 1----open	
	blue	Bluetooth (optional function) 0----close 1----open	
	Rtc (Optional)	00----Godex printer 01----Jiabo printer 02----SRP275 printer 03----TP printer(B19P)	

	dAtE (optional)	Need select clock module	Press [Imp] key to Show the time
	..**	Set the date	
	time		
	..**	Set the time	Press [F] key to change data. Press [Tare] and [Zero] change the number
P3 FUN	pr	Sleep parameters can be set to OFF and user can take 6 seconds as a gear , from (06-60)	Press [F] key to change the value. Press [Imp] key to confirm and go to next step
	Lum	LED displays brightness(0-7)	
	HF	Data hold mode PH---Peak holding mode dH---Manual holding mode AH---Automatic holding mode OFF---Close this function	

	Hd **d	Animal function settings if it is set to OFF, this feature is turned off, the user can take 10-d as a gear to set dynamic range from 10-d to 70-d. For instance: if it is set to 20d, when objects are varied within the range of 20d, the program automatically calculates the average value of the most suitable one and locks it, and there is a long beep when locked. When weight changes have beyond this range, it is unlocked, and there will be a short beep when unlocked, of which --d means that it will be unlocked only when the weight goes back to 0, but it can be locked when the weight is varied within the range of 80-d.	Press [F] key to change the value. Press [Imp] key to confirm and go to next step

	AHF	Animal function holding mode: AH---The weight is locked, but the weight data can be adjusted slowly SH---The weight is locked, but the weight data can not be adjusted, it must exceed the range of animal husbandry scale to unlock	Press [F] key to change the value. Press [Imp] key to confirm and go to next step
	UF	Alarm output signal mode: ud---Up and down alarm mode os---sequence mode	
	ME	on or off when the weight is negative choose alarm or no alarm	
	WS	on or off When alarm, Whether the weighing data stable	

	OK	On or off When alarm,Only when the weight is between the upper and lower limit, the serial port outputs the signal	Press [F] key to change the value. Press [Imp] key to confirm and go to next step
	ZnR	Minimum divisions for returning to 0, 0d to 20d	
	HZr	Manually zero range from 0 to 3, 0--- don't zero, to change data. 1 --- 4% for full scale, 2 --- 20% for full scale 3--- 100% for full scale	
	kZr	Auto zero range from 0 to 3, 0--- don't zero, to change data. 1 --- 4% for full scale, 2 --- 20% for full scale 3--- 100% for full scale	
Pn__		User put in the password, and the correct password can enter the following parameter setting, otherwise large item setting of serial port (P1 unt) is returned, and the enter the next step user shall press [Imp] key to	
		after inputting confirm the password. Currently code is [F] [F] [Tare] [F]	
P4 FIL (Filtering parameters)	FrEq	AD data output rate 0 --- 10 Hz 1 --- 40 Hz	
	Filt	Filtering strength setting ranges from 0 to 70---weak strength 7---strong intensity	
	Str	Data filtering ranges from O to 9 0---Small range 9---big range	
	Stt	Data filtering time form O to 9 0---Short time 9---Long time	

	Ztr	Zero tracking range is from 0 to 9, and 0 means non-track, while 1 to 9 indicates the range from .5d to 4.5d	Press [F] key to change the value. Press [Imp] key to confirm and go to next step
	Ztt	Zero tracking speed from O to 7 0---slow 7---fast	
	Wtr	Creep tracking parameters range from 0 to 9 0---non track 1---small range 9---big range	
	Wtt	Creep tracking parameters speed from 1 to 15 1---slow 15---fast	
	ZSH	0 keep the display function, set from 0 to 7, in the vicinity of zero in this range (0d-7d), the indicator shows 0, do not move, it is recommended not to be too	
		large, default 1	
	WSH	When the scale is loaded, the weight is temporarily locked within the range of 1d. 0---Do not use this function 1---use this function	
P5 C-D	E	Accuracy of instrument is selected among 01,02,05, 10,20 and 50	
	d	The decimal number of meter is 0, 1, 2, 3	
	*****	Full scale of indicator	

P7 CAL	ULoad	Zero Calibration	
	*****	Display Calibration Weight	
P9 AD		Indicator enters into the AD status	
		AD Status Display	Press [Imp] key to exit
Remarks: PH is the peak hold mode. When the function is turned on, the weight is locked when the weight is >=20d and stable. The key must be press [Fun] to unlock the weight. dH to manually hold, manually press [Fun] key s, weight lock, and then manually press [Fun] key to unlock the weight. AH is an automatic hold method. When the function is switched on, the weight is locked when the weight is >=20d and the weight is locked. After about 6S, the weight is unlocked. Weighing on the scale <20d, and then on the scale, lock the weight.			

4. Simple Calibration

On the empty scale, When the user presses [Tare] and holds on, the indicator displays "CAL" for about three seconds, and then shows the weight. At this time, modified weight to the calibration weight and then put on the weights and calibration is performed by pressing [Print] key after three seconds. indicator enters the normal display state after calibration.

5. Counting function

ln the weighing status, long press the [Fun] key, and "count" is show, then press the [Imp] key, and "C00000" is shown. Now indicator is in a counting state, press [Imp] key and the indicator can be switched between quantity and weight (current unit). After power off, the sampling value is not saved. ln counting, the units cannot be switched. After using counting function, do not use the function of keeping an animal .

Maintenance and precautions

1. To ensure the clarity and service life, the instrument should not be placed directly under sunshine, or location should be relatively smooth.

2. It is not recommended to use it in places with serious dust and vibration to avoid the use in wet environments.

3. Sensors and instrumentation shall be reliably connected, and the system should have a good ground, keeping away from strong electric field and strong magnetic field, and the sensor and instrument should be away from strong corrosive substances, keeping away from flammable materials.

WeightechUSA follows a policy of continuous development of its products, preserving the right to change specifications and equipment at any time, without notice, and declining all responsibility for any errors or omissions in this Manual. Therefore, for exact information on any particular model, please consult the WeightechUSA Technical Department.

CALL US: 954-666-0877 x305
sales@weightechusa.com
www.weightechusa.com