1116 TO 1117

FEB 12 2001

KIT # 369874

Conversion for Lincoln Impinger Oven Model 1116 to Model 1117 for converting natural gas oven to L.P. gas.

WARNING:

This kit is to be installed by a Lincoln Foodservice Products distributor in accordance with the manufacturer's instructions and all codes and requirements of the authority having jurisdiction. Failure to follow instructions could result in serious injury or property damage. The qualified agency performing this work assumes responsibility for this conversion.

Before starting conversion be certain that all parts are included in conversion kit. The kit should contain the following:

1 each main burner orifice marked .071
1 each bypass orifice marked .037
1 each gas regulator spring marked Y71GF-4
1 each conversion label
1 each burner venturi

REMOVE GAS AND ELECTRIC SUPPLIES FROM THE OVEN.
Remove control box covers.
Remove bypass orifice and replace with new bypass orifice. (see fig. 1)
Replace existing gas pressure regulator spring with new regulator spring.
Install new adjustment cover screw on gas valve (marked L.P.).
Affix caution label on gas valve.

Remove burner manifold. Replace existing main orifice with new main orifice. Remove burner venturi. Remove hot surface igniter and install on new burner venturi. (see figure 2)
Reassemble in reverse order.
Affix conversion label as close as possible to the existing specification plate.
Connect electric and gas supplies. **Oven should be connected to L.P. gas only.**

Connect manometer to gas shut-off valve. Check inlet pressure. Pressure must be 11" – 14" W.C.

Connect manometer to fitting on burner manifold (see figure 2). Start oven.

Check all piping for gas leaks. Using soapy water or electronic leak detector. Set manifold pressure at 10" W.C.

Check for proper operation.

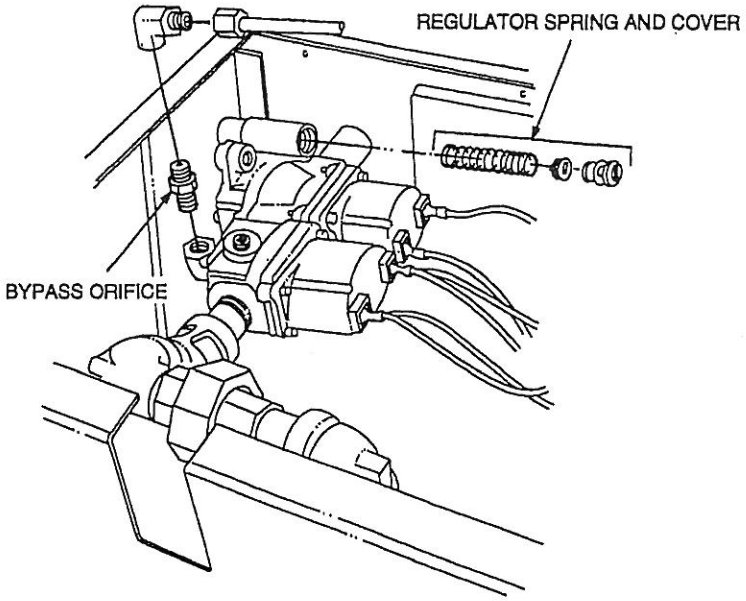

Figure 1

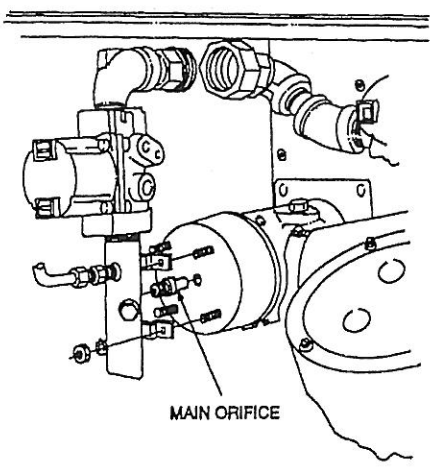

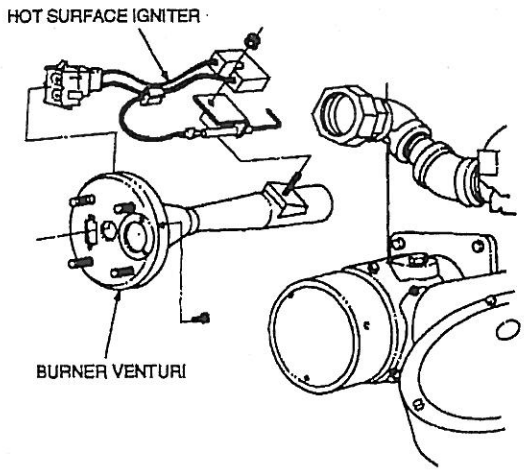

Figure 2