

DUKERS

Quality Commercial Refrigeration

3 YEARS PARTS & LABOR
PREMIUM
WARRANTY
5 YEAR COMPRESSOR

REACH IN FREEZER

D83AF

Top Mounted / 3-Solid Door



TECHNICAL SPECIFICATIONS

Voltage/Frequency	115V/60Hz
Refrigerant	R290
Type of Defrost	Automatic
Interial Material	Stainless Steel
Exterior Material	Stainless Steel
Temperature Range °F	0 ~ -8°F
Compressor Power (HP)	3/4+3/4
Nema Config.	NEMA5-20P

PRODUCT FEATURES

- Equipped with Locking Doors
- The compressor is mounted in the top and placed in the coolest possible area; this makes it easily accessible for servicing.
- Digital temperature controls with LED display for precise adjustment and automatic defrosting system.
- Temperatures in the cabinet range from 0 to -8 degrees Fahrenheit
- Self closing doors with stay open feature.
- R290 Natural Refrigerant promotes faster cool down and efficient energy consumption.
- Epoxy coated wire shelves.
- Stainless steel interior & exterior, sealed interior floors, and rounded cabinet corners for easy cleaning.
- High quality coated stainless adjustable shelves prevent peel and rust.
- Lifetime warranty on hinges.
- Adjustable front locking casters.

HIGH QUALITY
STAINLESS STEEL &
ROBUST DESIGN

DUKERS

Los Angeles | San Francisco | Dallas
Houston | Florida | Chicago | New Jersey

1-800-931-8628
info@dukersusa.com
www.DukersUSA.com

DETAILS & SPECIFICATIONS

D83AF

Front View

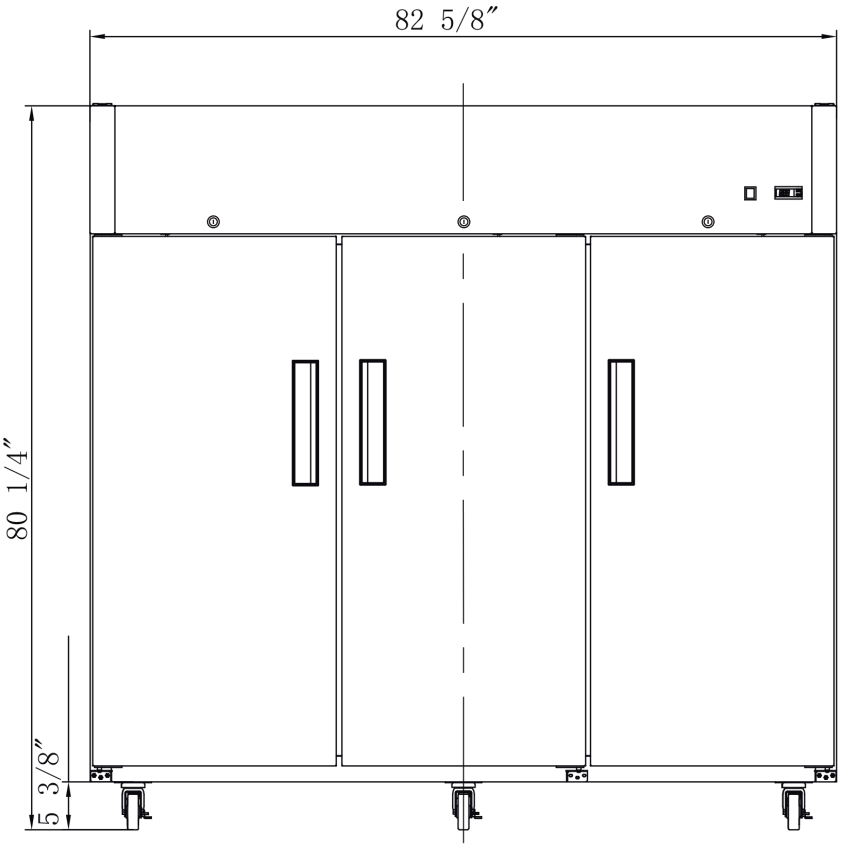

Side View

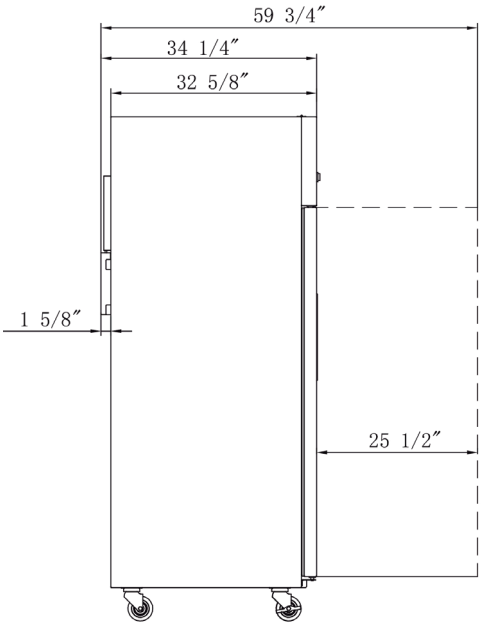

MODEL D83AF	
Rated Voltage	115V
Rated Frequency	60Hz
Total Input Power	1300W
Total Current	16A
Total Capacity	66.21cu ft
Climatic Category	4-5
Protection Type	I
Design Pressure High Side	300 PSIG
Design Pressure Low Side	150 PSIG
Insulation Blowing Gas	C-Pentane
Refrigerant	R290/4.2+4.2 oz

MODEL	EXTERNAL DIMENSION WXDXH (INCHES)	PACKAGING DIMENSION WXDXH (INCHES)	PRODUCT NET WEIGHT	# OF SHELVES	40HQ CONTAINER CERT.
D83AF	82 5/8 x 34 1/4 x 80 1/4	84 5/8 x 35 1/4 x 82 1/4	595 lbs	12	13

NATURAL REFRIGERANT · PROUD MEMBER CFESA Commercial Food Equipment Service Association · AutoQuotes · Intertek · Intertek · NEMA-5-20P

DUKERS
Los Angeles | San Francisco | Dallas
Houston | Florida | Chicago | New Jersey
1-800-931-8628
info@dukersusa.com
www.DukersUSA.com