

DUKERS

Quality Commercial Refrigeration

3 YEARS PARTS & LABOR
PREMIUM
WARRANTY
5 YEAR COMPRESSOR

CHEF BASE

MODEL DCB48



TECHNICAL SPECIFICATIONS

Voltage/Frequency	115V/60HZ
Refrigerant	R290/1.76oz
Type of Defrost	Automatic
Interial Material	304/201 Stainless Steel
Exterior Material	304/201 Stainless Steel
Total Current	1.7A
Climatic Category	4-5
Nema Config.	NEMA5-15P
Compressor Power (HP)	1/5

TEMPERATURE RANGE (F°)	EXTERNAL DIMENSION WXDXH (INCHES)	PACKAGING DIMENSION WXDXH (INCHES)	PRODUCT NET WEIGHT	DRAWERS	40 HQ CONTAINER CERTIFICATION
33~38°F	48"x 32 1/4" x 26 5/8	49" x 34 1/4" x 29 1/8	180 lbs	2	66

PRODUCT FEATURES

- Digital temperature control features a digital display to make monitoring interior temperatures a breeze. This unit also comes with an auto-defrost function.
- Foamed-in-place insulation keeps the interior cold and adds structural strength.
- Stainless steel Interior with rounded corner for easy cleaning. Meet and exceed sanitation standards.
- Durable and high weight bearing rails for drawers. 4 divider bars per drawer.
- Heavy-duty 4" casters with brakes are included providing the unit with convenient mobility, making cleaning and servicing a breeze! Just roll the unit away from the wall.
- Ergonomic and modern recess door handles.
- Removable Drawer Gaskets, each drawer gasket is removable for easy cleaning and maintenance.

HIGH QUALITY STAINLESS STEEL & ROBUST DESIGN

DUKERS

Los Angeles | San Francisco | Dallas
Houston | Florida | Chicago | New Jersey

1-800-931-8628
info@dukersusa.com
www.DukersUSA.com

DETAILS & SPECIFICATIONS

CHEF BASE

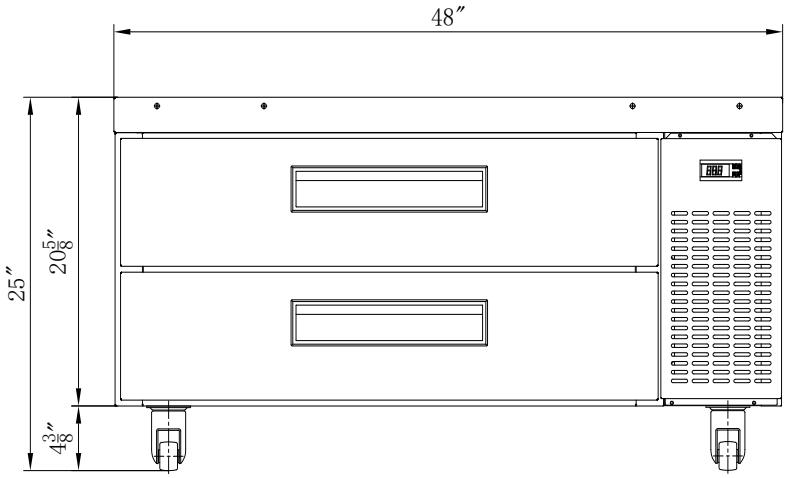

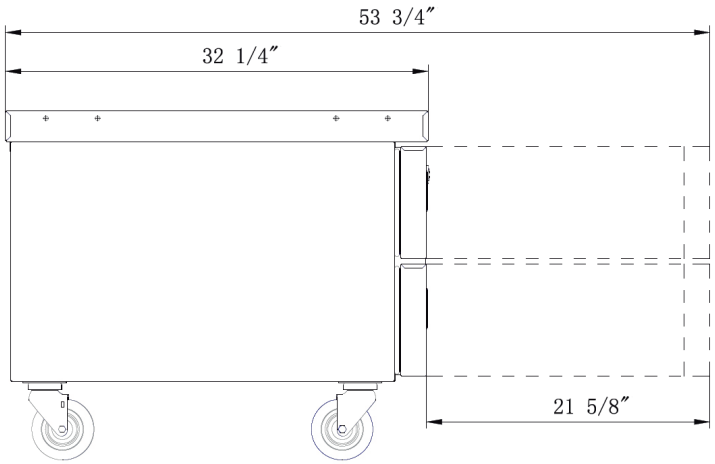

Side View

MODEL DCB48	
Rated Voltage	115V
Rated Frequency	60Hz
Total Input Power	200W
Total Current	1.7A
Climatic Category	4-5
Protection Type	I
Design Pressure High Side	300 PIG
Design Pressure Low Side	150 PIG
Insulation Blowing Gas	C-Pentane
Net Weight	180 lbs
Nema Config.	NEMA5-15P
Temperature Range	33~38°F
Heating Power	192.9W
40 HQ Container Certification	66
Refrigerant	R290/1.76 oz
1/6 Pan Count	15
Compressor Power (HP)	1/5

Pan Layout

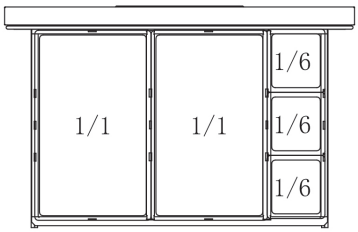

FULL PANS

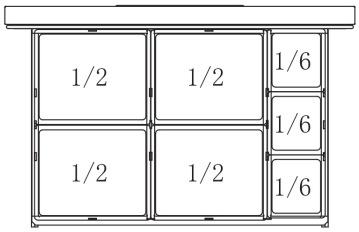

HALF PANS

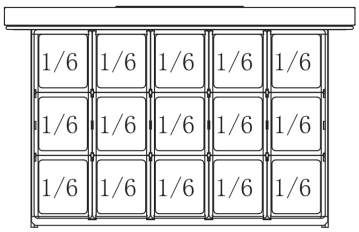

SIXTH PANS

NATURAL REFRIGERANT

PROUD MEMBER CFESA Commercial Food Equipment Service Association

AutoQuotes

Intertek

Intertek

115/60/1
NEMA-5-15P

DUKERS
Los Angeles | San Francisco | Dallas
Houston | Florida | Chicago | New Jersey

1-800-931-8628
info@dukersusa.com
www.DukersUSA.com