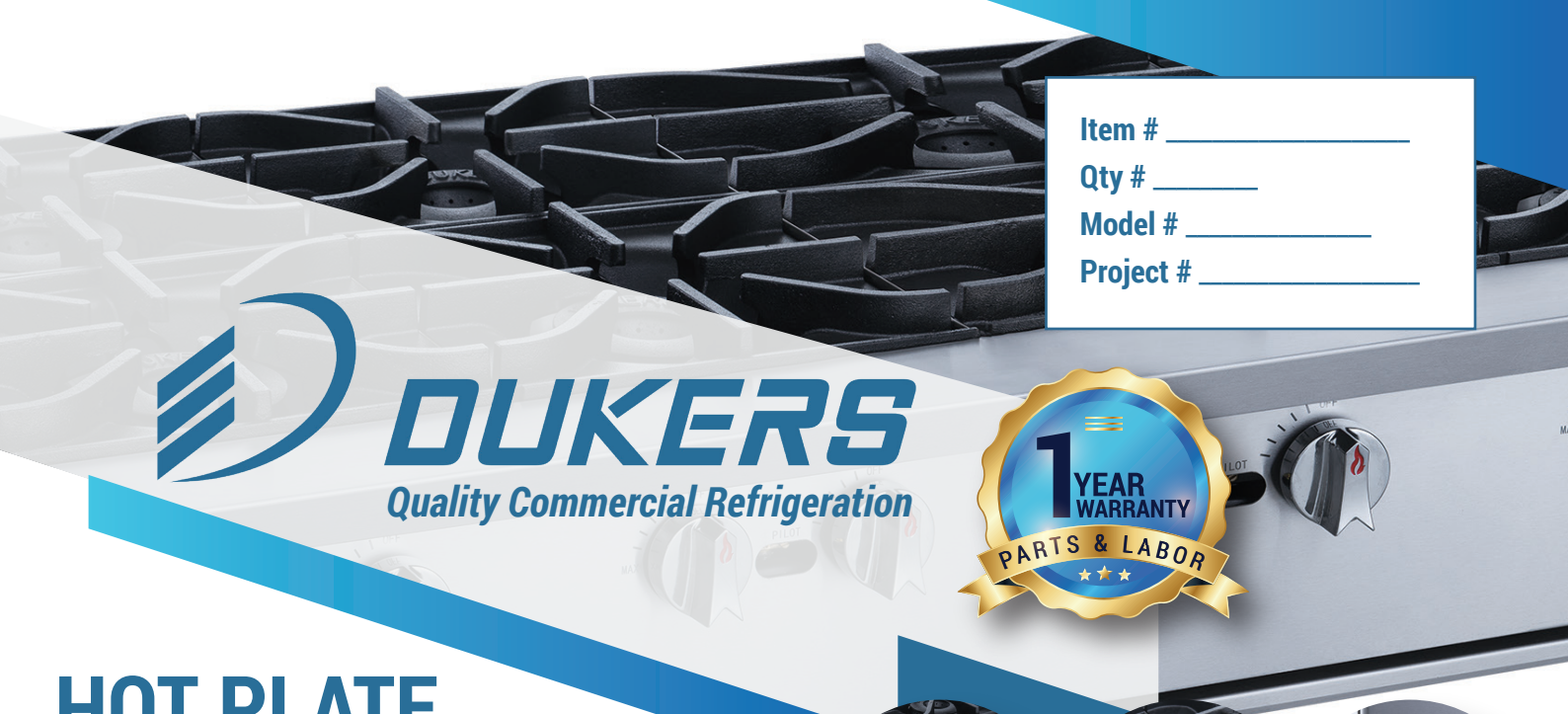

Item # _____
Qty # _____
Model # _____
Project # _____

DUKERS
Quality Commercial Refrigeration

1 YEAR WARRANTY
PARTS & LABOR

HOT PLATE
SIX BURNER
DCHPB36






Catch Tray


Surface

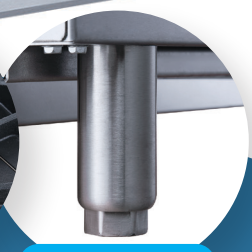
Legs

PRODUCT DESCRIPTION

- Stainless steel exterior and interior.
- 32,000 BTU stainless steel burners with standby pilot.
- Lift-off cast iron burner.
- Independent manual controls every 12".
- "Cool-to-the-touch" front s/s edge.
- Each hot plate is shipped with Standard Natural Gas, LP conversion kit.
- Adjustable, stainless steel legs standard.
- Full length seamless drip pan, easy to remove and clean.

HOT PLATE MODEL	DIMENSION		
	Width	Depth	Height
DCHPB36	36 in	28 3/4 in	13 3/8 in

HIGH QUALITY STAINLESS STEEL & ROBUST DESIGN

DUKERS
Los Angeles | San Francisco | Dallas
Houston | Florida | Chicago | New Jersey

1-800-931-8628
info@dukersusa.com
www.DukersUSA.com

DETAILS & SPECIFICATIONS

HOT PLATE DCHPB36

Top View

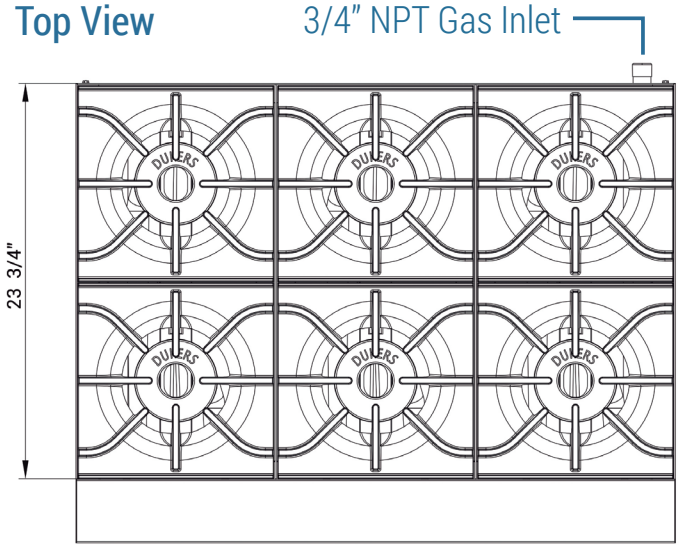

Side View

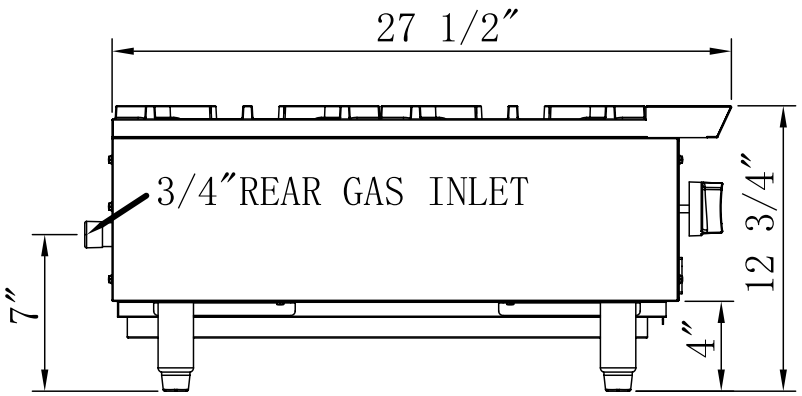

Front View

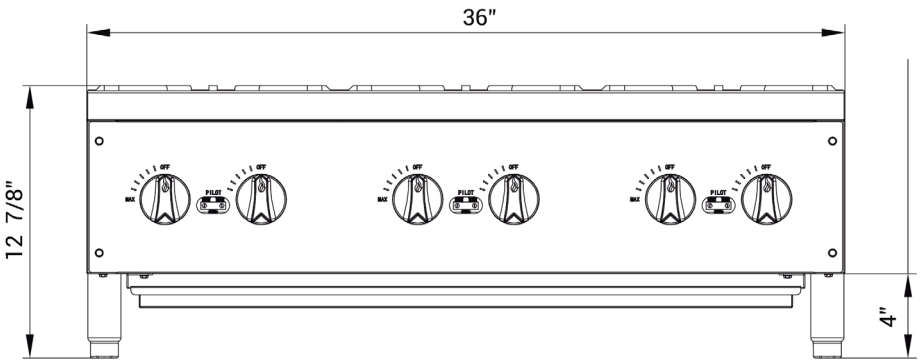

DCHPB36	
GAS SOURCE	NG/Propane
WORK AREA	35.79x23.62in
BURNER	6 count
SINGLE BURNER	32,000 BTU/H
COMBINED	192,000 BTU/H
GAS PRESSURE	NG: 4 "WC Propane: 10 "WC
NOZZEL	NG: 40# Propane: 52#
CONTAINER FITMENT	150

Model	Packaging Dimensions (inches)			Net Weight (lbs)	Ship Weight (lbs)
	W	D	H		
DCHPB36	38 1/4"	32 5/8"	17 3/4"	154.32	209.44

PROUD MEMBER CFESA Commercial Food Equipment Service Association

SANITATION

C US

DUKERS

Los Angeles | San Francisco | Dallas
Houston | Florida | Chicago | New Jersey

1-800-931-8628

info@dukersusa.com

www.DukersUSA.com