Installation of ¼" Pilot tubing and Safety Valve For 900 Series Deck Ovens Kit #52301

Contents:

Lit Sheet L-999 (this document)

1. Lit Sheet L-900 Thermocouple Tightening Instructions
2. 55131, Pilot Assembly
3. 55153, Pilot Bracket
4. 52090, .010" LP Orifice (not used on natural gas ovens)
5. 52091, Thermocouple
6. 55127, TS11K Safety Valve
7. 18289, #10-32 Screw
8. 1296, Spring Washer, .200 I.D.
9. 956, ¼-20 Screw
10. 1265, Spring Washer, .260 I.D.
11. 55152,1/4" x 50" Pilot Tube
12. 52095,Control Panel Cover

Step 1: Prepare the area

Make sure that the **gas supply is off** and the oven is cool. Failure to turn off the gas supply before servicing the safety valve could result in property damage, serious injury, or death.

Step 2: Check the Gas Type

The pilot is supplied with a .018" orifice, designed for use with natural gas. If the customer uses LP Gas, you will have to install the .010" orifice included in this kit. See appendix for details.

Step 3: Access the Control Compartment

To access the control compartment you will need to remove both knobs on the front of the oven. The on-off gas valve (A) has a Phillips screw that needs to be removed before pulling the handle off. The temperature control (B) simply pulls straight off.

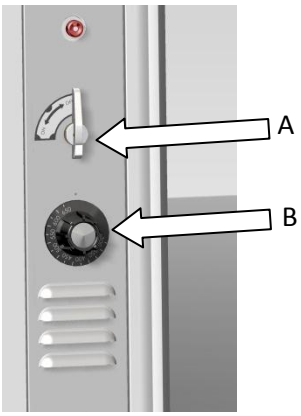

Once both knobs have been removed, remove the control panel cover by inserting a screwdriver into the lowermost louver and pulling straight out. There is no hardware securing the cover.

Step 4: Remove Safety Valve

Unscrew the top union of the stack assembly (C) to free the stack from the oven. Pull the top of the stack forward, and once clear of the oven remove the compression fitting (D) and the thermocouple (E). Then unscrew the safety valve from the brass adapter (F) and remove the safety valve.

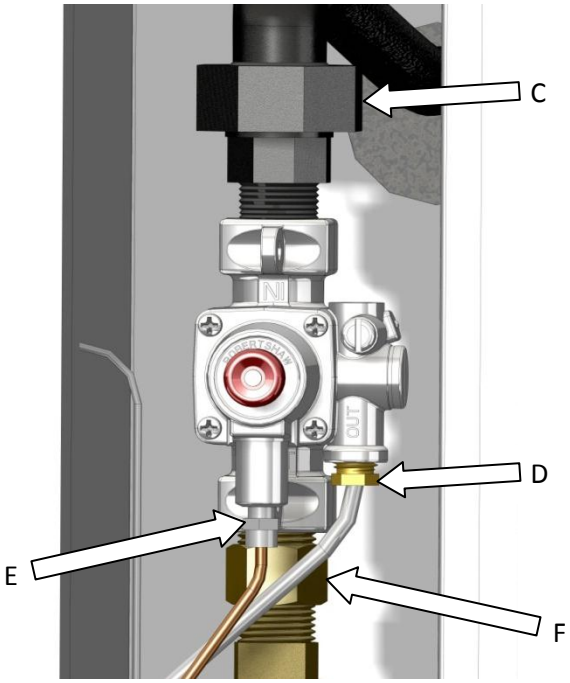

Step 5: Remove the Pilot

Remove and discard the screw (G) holding the pilot bracket to the manifold, being careful not to leave the washer in the oven. Discard the bracket, pilot assembly, thermocouple, pilot tubing, and associated hardware. Everything will be replaced with new parts from the kit.

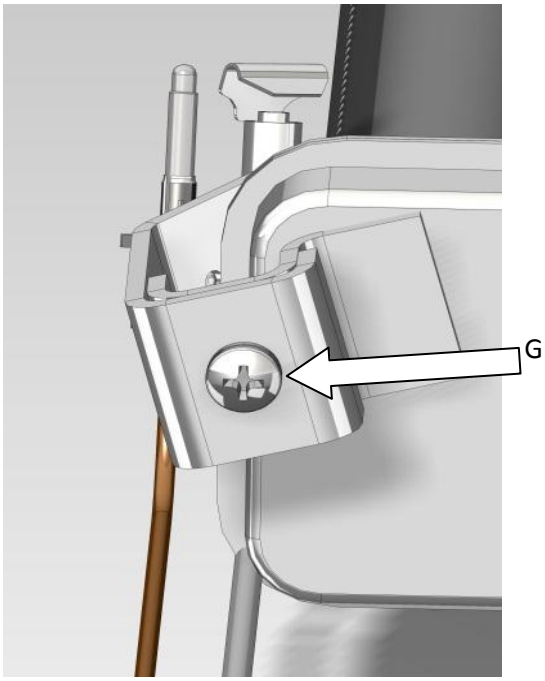

Step 6: Replace the Safety Valve

Being careful not to damage the threads beyond re-use, remove the threaded nipple (J) from the top of the old safety valve. Once removed, discard the old safety valve.

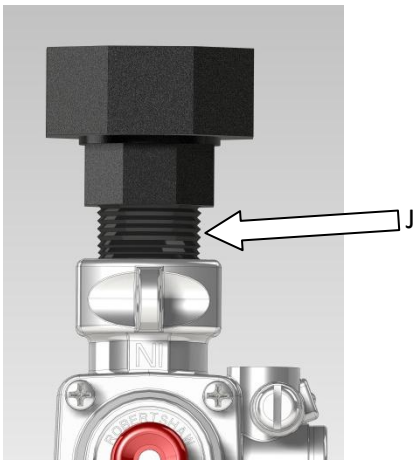

You may leave the union attached to the top of the nipple. Wipe the threads of the brass adapter (F) and the threaded nipple (J) and apply a small amount of thread sealant to both parts. Thread the nipple (J) onto the new TS11K safety valve (P/N 55127) and thread the safety valve assembly back onto the brass adapter (F). Ensure that the fit is tight and that the safety valve button is aligned with the rest of the stack.

Do not reattach the union (C) yet!

Step 7: Bend Pilot Tube

If the pilot tube (P/N 55152) was coiled in a box, roughly straighten the coiled part. Locate the end of the pilot tubing with the "S" bend and slide the tube into the compression fitting (D) on the new safety valve **but do not tighten it!** The pilot tube needs to be hand bent to fit through the oven liner. While the tube is in the fitting, mark where it will have to be bent to fit and bend it such that it will sit alongside the main gas line.

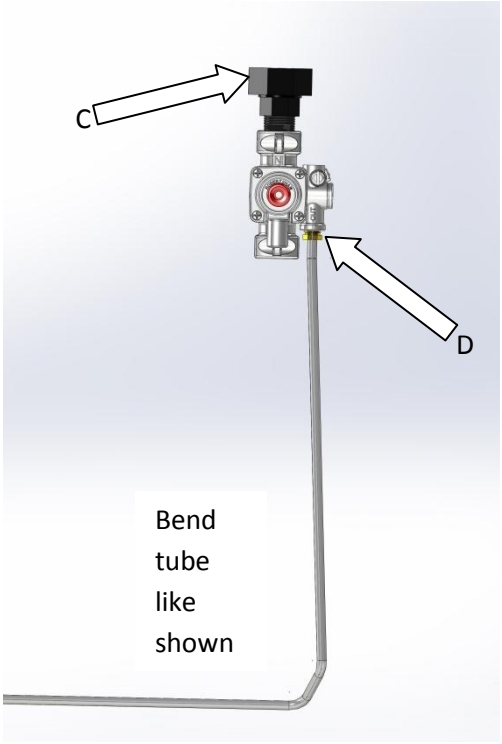

Step 8: Install Pilot tube and Thermocouple

Slide the pilot tube and thermocouple through the oven liner as shown in (K). Press the pilot tube as far into the compression fitting (D) as possible (about ¾") and tighten firmly. Screw the thermocouple into the safety valve (E). **Do not over tighten the thermocouple – it should be finger tight plus a ¼ turn of a wrench.**

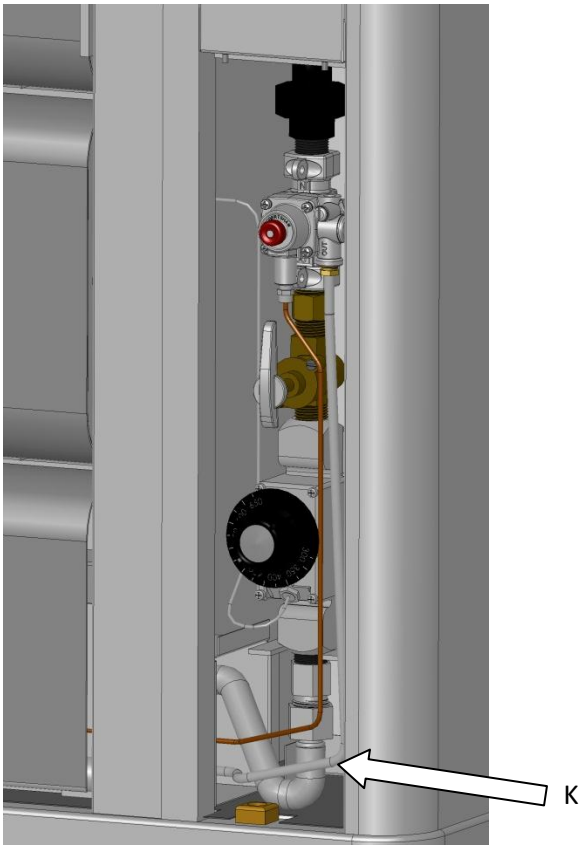

Step 9: Reattach Safety Valve

Tighten the union (C) onto the gas pipe at this time. Ensure that the stack is straight and that all three components line up with the cutouts in the control panel.

Step 10: Reattach pilot bracket

Push the pilot assembly (P/N 55131) over the free end of the pilot tube as far as possible (about 5/8") and tighten the compression fitting. Push the thermocouple into the pilot assembly as far as it goes. The thermocouple tip should be level with or slightly above the pilot hood. Screw the pilot assembly to the pilot bracket using the included #10-32 screw (P/N 18289) and associated spring washer (P/N 1296). The knob on the pilot assembly should mate with the alignment hole in the pilot bracket.

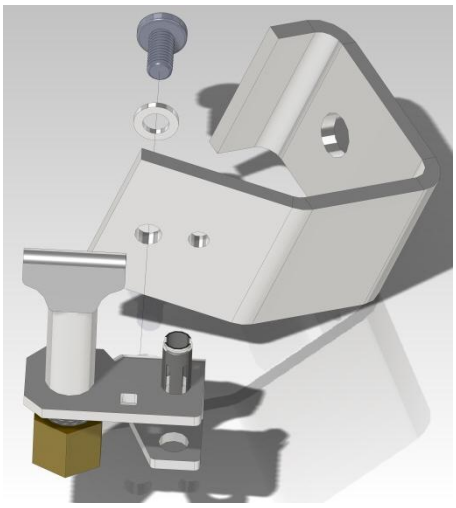

Bend the pilot tube such that the pilot bracket lines up with the mounting point on the manifold (see picture below), and screw the pilot bracket to the manifold using the included ¼-20 screw (P/N 956) and associated spring washer (P/N 1265)

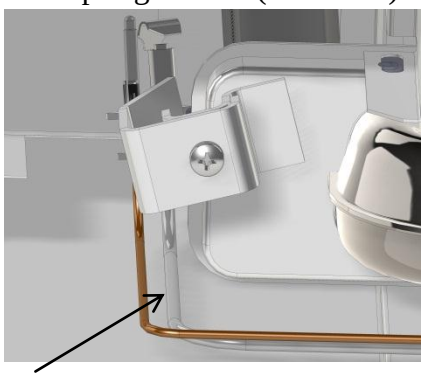

Bend in an arc if necessary to fit pilot bracket on manifold.

Step 11: Test for proper operation and leaks.

Temporarily push both knobs back onto the control stack to test the oven. Reconnect the oven to the gas supply, turn the gas supply on, and re-light the pilot by holding the red bypass button on the safety valve while holding a lighter near the pilot hood. It may take several minutes to fill the oven's gas line and light the pilot after replacing the safety valve. Once the pilot is lit, verify that the main burners light from the pilot by turning the on-off gas valve to the horizontal position while the thermostat knob is set as high as possible (turn the knob counterclockwise as far as it will go). Once the main burners are lit, check for leaks. If a combustible fuel gas sensor is not available, use soap and water on all joints. Fix leaks by tightening components or re-applying thread sealant. Ensure no joint leaks when the service is complete.

Step 12: Return oven to customer.

Replace the control panel, both knobs, and clean the area. Ensure no loose hardware is left in, on, or around the oven.

Appendix: Replacing the Pilot Orifice

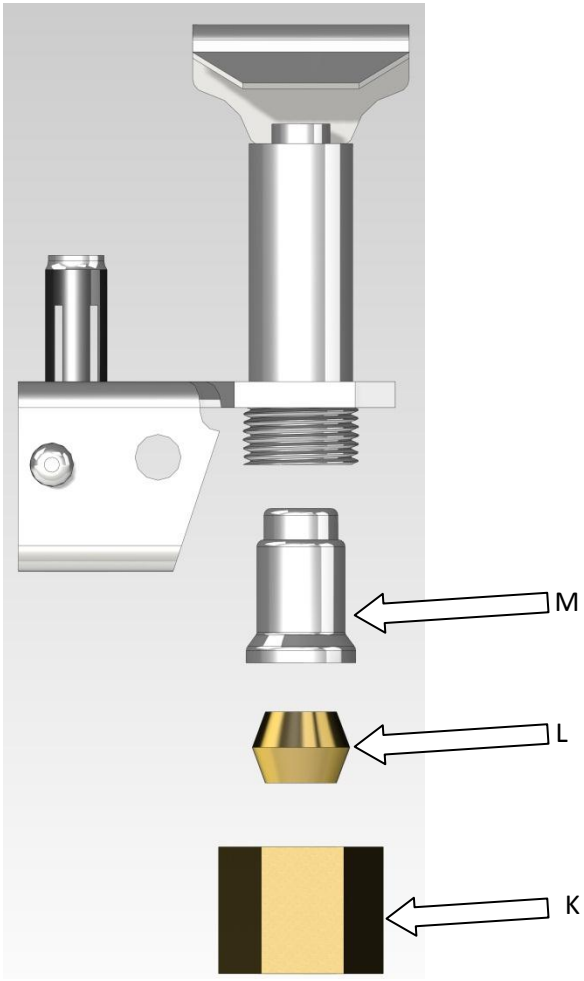

To change the pilot orifice, unscrew the hex nut (K), being careful not to lose the ferrule (L) or orifice (M) when the nut is removed. The orifice is labeled on the top with its size in thousandths of an inch. Verify that you are putting the correct orifice in the oven:

Gas Type	Gas Pressure	Orifice Size, 900 Series Deck Oven
Natural Gas	5" W.C.	0.018"
LP Gas	10" W.C.	0.010"

Hold the pilot assembly upside down, put the new orifice in the pilot assembly, put the ferrule in the orifice, and then thread on the hex nut. **Do not tighten the nut without a tube installed - the ferrule is easily crushed.**