1040 TO 1041
1240 TO 1241
1450 TO 1451

Kit # 369876

Instructions for converting Lincoln Impinger Oven Model 1040/1240/1450 to Model 1041/1241/1451 for converting natural gas oven to L.P. gas.

**WARNING:**
**This conversion kit is to be installed by a Lincoln Foodservice Product Inc. distributor in accordance with the manufacturer's instructions and all codes and requirements of the authority having jurisdiction. Failure to follow instructions could result in serious injury or property damage. The qualified agency performing this work assumes responsibility for this conversion.**

Read all instructions carefully before performing conversion.

Before starting conversion be certain that all parts are included in conversion kit. The kit should contain the following

1 ea. Main Burner Orifice marked .120.
1 ea. Pilot Orifice marked 7221.
1 ea. Regulator Spring Kit marked Y71GF -4.

Remove gas and electric supplies from the oven.

Remove control box cover and front panel.

Remove (4) screws from inlet piping flange and remove inlet piping nipple. Disconnect pilot tube at burner inlet. Disconnect pipe union. Set gas valve aside.(see fig.1)
Remove (2) hex nuts from burner manifold flange. Rotate burner flange to access main burner orifice.Main orifice may now be replaced.
Disconnect spark lead from ignition control.
Remove (4) screws from burner plate. Burner may now be removed and pilot orifice may now be replaced.(see fig. 2)

Reassemble in reverse order.

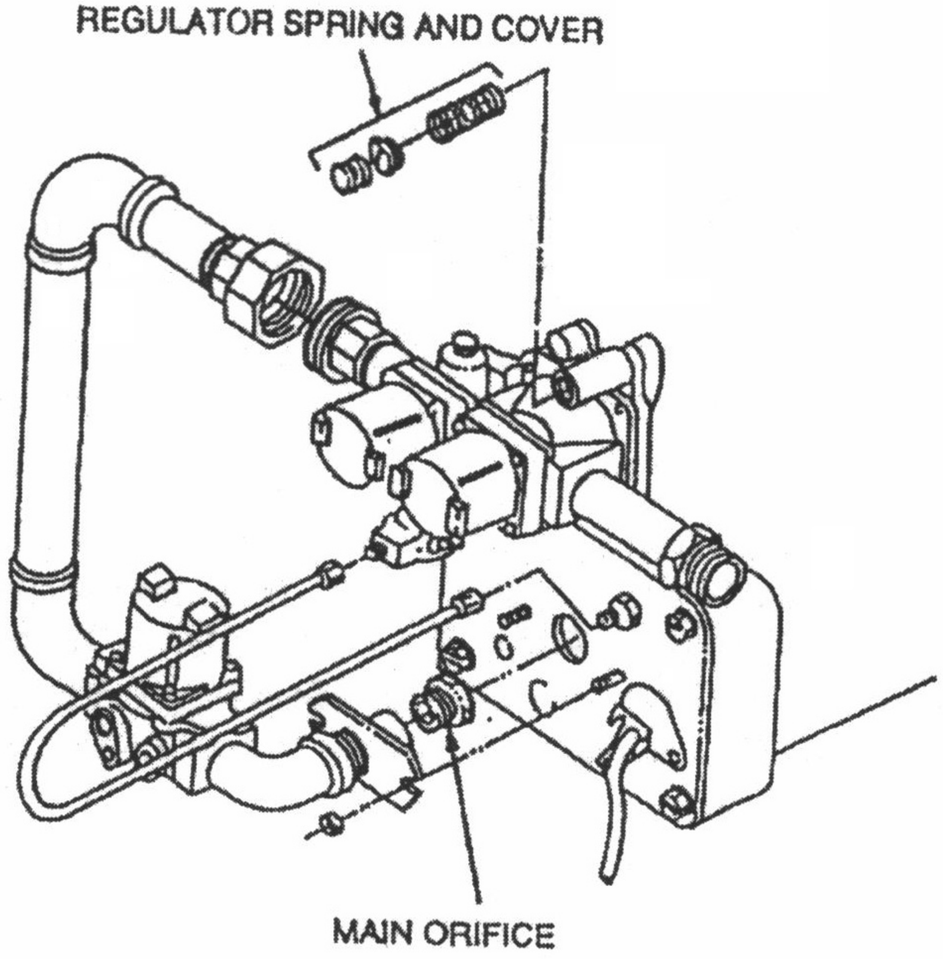


Figure 1

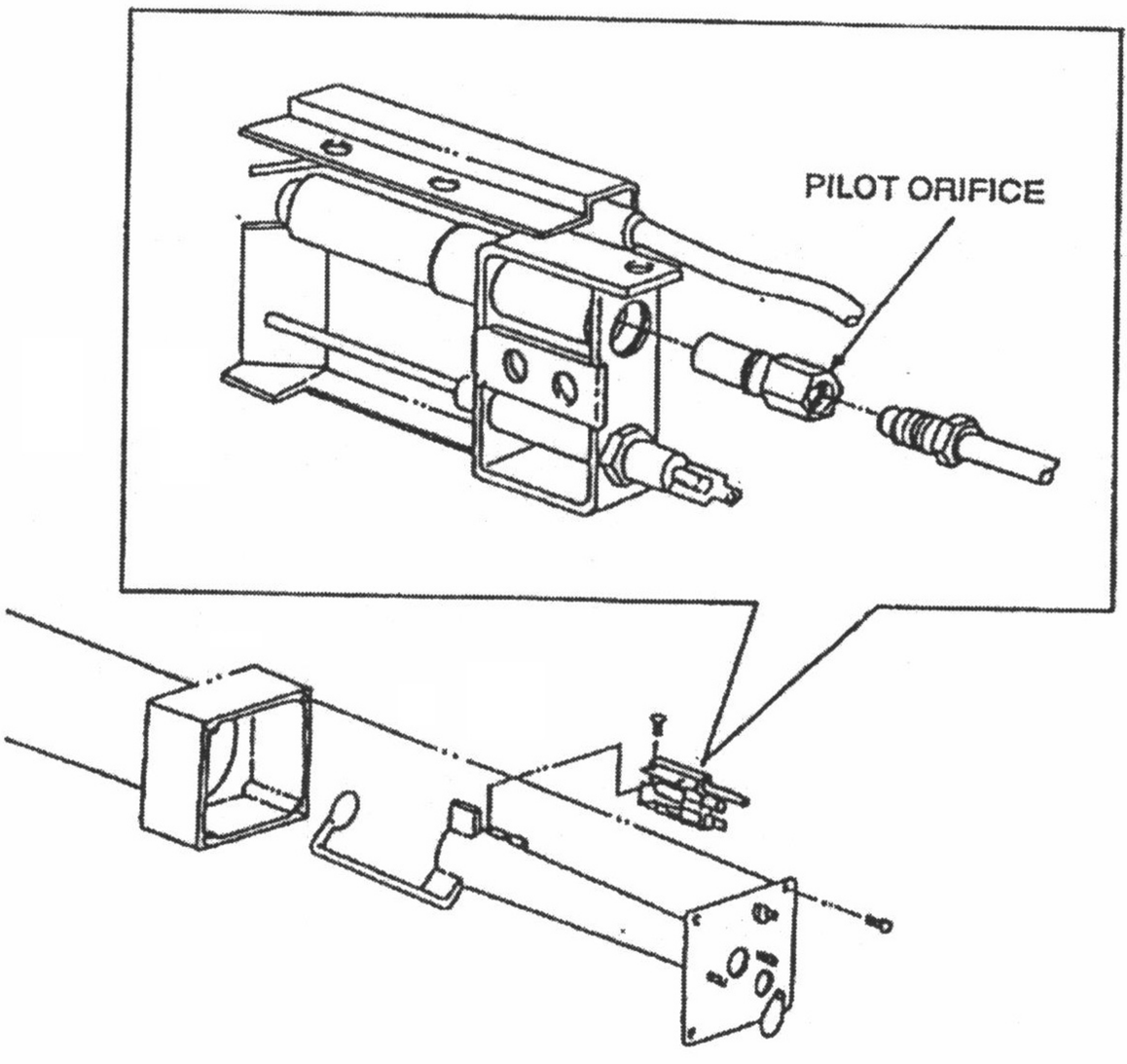


Figure 2